FLUIDRA



# POOL & SPA

GENERAL CATALOGUE

# 2020

ASTRALPOOL

# FLUIDRA

## THE PERFECT POOL EXPERIENCE

50 years ago Fluidra's four founding families opened our first company in Barcelona, Spain. Half a century on, and thanks to the support of all our valued customers, our global footprint now extends to over 45 countries. Always driven by our customer-first approach we strive to provide you with the best possible service.

Our portfolio includes some of the most trusted brands, including Jandy®, AstralPool®, Polaris®, Cepex®, Zodiac®, CTX Professional® and Gre®. We offer our customers an expansive array of products across both the residential and commercial pool and wellness markets.

We have some 5,500 employees and the necessary resources to accelerate innovation in critical areas like energy-efficiency, robotics and the Internet of Things. We are guided by clear values and come to work every day with a simple and direct mission in mind: **To create the perfect pool and wellness experience**.

Many thanks for your loyalty during these five decades. Fluidra is as dedicated as ever to its mission and looks forward to supporting the growth of your business for generations to come. With a 50 year heritage of excellence, this is just the beginning.

FLUIDRA Est. 1969 50 YEARS

## **INTEGRATED** BUSINESS MODEL

**R+D+i**
Excellence in innovation with +200 engineers and +1,100 patents

**Production**
37 flexible multi-technology plants in key countries

**Logistics**
Logistics operators to ensure fast and reliable deliveries

**Distribution**
Some 136 points of sale, giving support and training to the professional clients in over 45 countries

**Engineering**
Design and engineering of water projects

# KEY FIGURES

**5,500**
Number of employees

**+45**
Number of countries

**136**
Number of sales branches

**37**
Number of production centres

# HIGHLY RECOGNIZED BRANDS

Jandy · ASTRALPOOL · Polaris · CEPEX · ZODIAC · Gre

# A GLOBAL POWERHOUSE

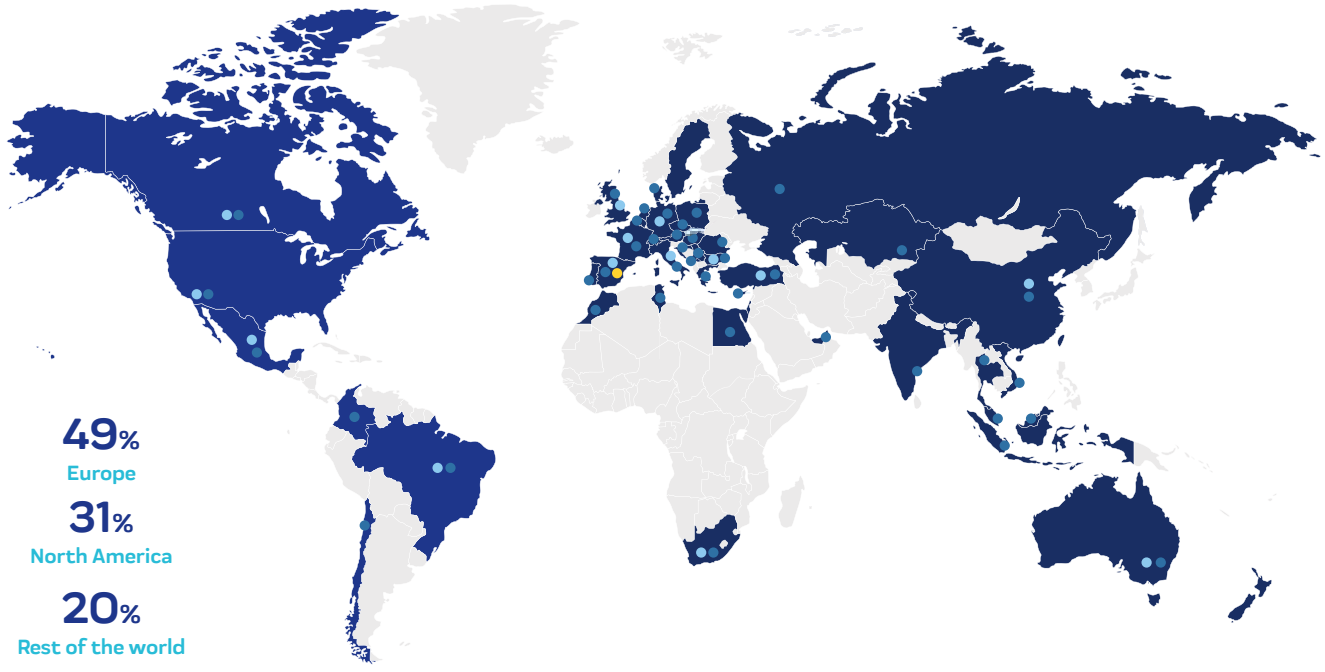

# NEW PRODUCTS 2020





## Colour range of pool fittings and projectors

VERSATILITY AND COLOUR
FOR YOUR POOL

See page 71



## Victoria Plus Silent Variable Speed

A NEW GENERATION
OF FILTRATION PUMPS

See page 151

*Fluidra Connect compatible*



## Blue Check

5-IN-1 MAINTENANCE
TEST STRIPS

See page 181





## New range of Flexi LEDs Projectors

THE LED SOLUTION THAT ADAPTS
TO ALL POOL TYPES

See page 236

GARANTIA 3 AÑOS YEARS GUARANTEE

COMPATIBLE NN thing

*Fluidra Connect compatible*

Modbus



## DolceVita Diva

DOLCEVITA DIVA
WITH AUTOMATIC POOL COVER

See page 345



## Inoxpool

DESIGN AND DURABILTY
FOR STAINLESS STEEL POOLS

See page 477

# TOOLS
# OF THE ASTRALPOOL WEBSITE

## Fluidra configurators

**Heat Pump:** AstralPool configurator helps to choose the most adapted model based on your expectations and your environment. With its wide range of heat pumps, you will achieve perfect comfort.



**Dehumidifier:** AstralPool configurator helps you to select the dehumidifier that adapts better to the conditions of your pool.

**LumiPlus Flexi:** Lumiplus Flexi is the new projector from AstraPool and it is characterized by its great adaptability. With this solution you can choose:
- The color of the light (white, warm white and RGB)
- The mounting system (niche, wall , nozzle)
- The faceplate color that best matches your pool ( beige, light grey, anthracite)

Using this configurator, you will be able to choose the LED Projector that best suits your requirements in just 6 steps.




Find all these calculation tools at:
**https://www.astralpool.com/en/calculation-tools/**
and in the ToolBox Fluidra Application (see below)

## Fluidra calculators

**Victoria Plus Silent VS:** The following AstralPool calculator makes it possible to calculate the annual savings made by installing a Victoria Plus Silent Variable Speed pump in comparison with conventional single speed pumps found on the market.




**Kivu:** The filtration pump Kivu stands out for its high efficiency. With its AstralPool calculator, you can not only select the most suitable model for your pool but also calculate the savings obtained.

Find all these calculation tools at:
**https://www.astralpool.com/en/calculation-tools/**
and in the ToolBox Fluidra Application (see below)

## Fluidra TOOLBOX

Fluidra toolbox is a single application where pool professionals can download our product catalogs and leaflets as well as access directly on mobile or tablets to all Fluidra's configuration and calculator tools.




ANDROID APP ON Google play

Available on the iPhone App Store

**Download it now!**

# FLUIDRA PRO | ACADEMY

## THE ONLINE LEARNING PLATFORM FOR FLUIDRA CUSTOMERS

**proacademy.fluidra.com**

**Fluidra Pro Academy** is a learning platform designed for you, with all of the expertise and tools that you need to sell our products with confidence and assurance.




# How to become a PRO ?

1. Log on to proacademy.fluidra.com
2. Register
3. **Start** learning

**Accessible**
Anytime, anywhere

**Quick and easy**
Greater technical expertise at your fingertips

**Levels**
Basic, Intermediate, Advanced

**Exclusive content**
Learn what nobody else knows. For professionals

**The very latest**
Be the first to find out about new market launches



ASTRALPOOL | CTX Professional | PISCINE LAGHETTO by ASTRALPOOL | ZODIAC

PISCINE LAGHETTO®
by ASTRALPOOL



# your water mirror



## Dolce Vita

Elegant in design, this system has revolutionized the world of pools. The unbeatable quality rattan and sound technology ensure a long service life.



## PLAYA

An extremely elegant mini-pool that is perfectly suited for terraces and gardens.
Hot water, an air massage and bubble feature, and a space for sunbathing.
Available in Laghetto's colours: white, grey and coffee.



## pop!

The classic above-ground pool has been revamped to bring colour into your garden.
Pop! can be turquoise, white, sand, green or purple. Design adapted to new technology backed by 40 years of experience.

FLUIDRA

For further information go to: www.piscinelaghetto.com




# OUR COMMITMENT TO **SUSTAINABLE POOLS**

## Simple details for a great Future

**Respect for the water** and **its rational use** is the core philosophy of our Group.
Our commitment to sustainability has led us to create a **specific line of sustainable products**.



### Thermal covers

- Reduces evaporation by up to 65%.
- Saves 25% of heat energy.

**-65%**



### Electronic pool cleaners

- Saves 20% in water consumption during filter backwash.

**-20%**



### LED lighting

- Reduces electrical energy consumption by up to 92%.

**-92%**



### Variable speed pumps

- Reduces electricity consumption by up to 85%.
- Reduces the sound level by 75%.

**-75%** **-85%**



### NanoFiber Filter

- Reduces water consumption for filter backwash by 50%.

**-50%**



### Active glass filter media

- Reduces water consumption by 25% during filter backwash.

**-25%**



### Pro Elyo Inverboost NN

- Saving of up to 33% on your pool's heating bills.

**-33%**



### OC-1 filtration media

- Savings of 40% in filter backwashes.

**-40%**

# GENERAL **INFORMATION**

## Unit conversion table

| Length: | m | in | ft | |
|---|---|---|---|---|
| Metre (m) | 1 | 39.370 | 3.281 | |
| Inch (in) | 0.025 | 1 | 0,083 | |
| Foot (ft) | 0.305 | 12 | 1 | |
| **Surface:** | $m^2$ | $in^2$ | $ft^2$ | $cm^2$ |
| Square metre ($m^2$) | 1 | 1,150.388 | 10.764 | 10,000 |
| Square inch ($in^2$) | 0.000645 | 1 | 0.0069 | 6.450 |
| Square foot ($ft^2$) | 0.093 | 144.036 | 1 | 929.03 |
| Square centimetre ($cm^2$) | 0.0001 | 0,155 | 0.00107 | 1 |
| **Volume:** | $m^3$ | UK gal | US gal | l |
| Cubic metre ($m^3$) | 1 | 219.969 | 264.172 | 1000 |
| Imperial gallon (UK gal) | 0.0045 | 1 | 1.201 | 4.546 |
| US gallon (US gal) | 0.0038 | 0.833 | 1 | 3.785 |
| Litre (l) | 0.001 | 0.220 | 0.264 | 1 |
| **Speed:** | m/s | in/s | ft/s | m/h |
| Metres / second (m / s) v | 1 | 39.370 | 3.281 | 3600 |
| Inch / second (in / s) | 0.025 | 1 | 0.083 | 91.44 |
| Foot / second (ft / s) | 0.305 | 12 | 1 | 1097.28 |
| Metre / hour (m / h) | 0.00028 | 0.011 | 0.00091 | 1 |
| **Flow rate:** | $m^3/m^2.h$ | US gal/$ft^2$.min | UK gal/$ft^2$.min | $ft^3/ft^2$.min |
| ($m^3$ / $m^2$.h) | 1 | 0.409 | 0.341 | 0.055 |
| (US gal / $ft^2$.min) | 2.445 | 1 | 0.833 | 0.134 |
| (UK gal / $ft^2$.min) | 2.936 | 1.201 | 1 | 0.158 |
| ($ft^3$ / $ft^2$.min) | 18.322 | 7.474 | 6.311 | 1 |
| **Mass:** | kg | g | lb | |
| Kilogram (kg) | 1 | 1000 | 2.205 | |
| Gram (g) | 0.001 | 1 | 0.0022 | |
| Pound (lb) | 0.454 | 453.59 | 1 | |
| **Pressure:** | Pa | bar | $kg/cm^2$ | psi |
| Pascal (Pa) | 1 | 0,00001 | 0.00001 | 0.00014 |
| Bar (bar) | 100000 | 1 | 1.019 | 14.504 |
| Kilogr. / Cent. squared ($kg / cm^2$) | 98100 | 0.981 | 1 | 14.228 |
| Pound / square inch (psi) | 6894.76 | 0.0689 | 0.070 | 1 |
| **Energy:** | J | kWh | cal | kcal |
| Joule (J) | 1 | 0.000000277 | 0.239 | 0.00024 |
| Kilowatt per hour (kWh) | 3600000 | 1 | 860421 | 861.244 |
| Calorie (cal) | 4.186 | 0.00000116 | 1 | 0.001 |
| Kilocalorie (kcal) | 4186 | 0.0012 | 1000 | 1 |
| **Power:** | kW | HP | BTU/h | |
| Kilowatt (kW) | 1 | 1.341 | 3412.14 | |
| Horsepower (HP) | 0.746 | 1 | 2544.43 | |
| British Thermal Unit / hour (BTU / h) | 0.00029 | 0.00039 | 1 | |
| **Flow rate:** | $m^3/h$ | US gall/min | UK gall/min | |
| Cubic metre / hour ($m^3$ / h) | 1 | 3.667 | 4.403 | |
| US gallon / minute (US gall / min) | 0.273 | 1 | 1.201 | |
| Gal / min UK (UK gall / min) | 0.227 | 0.833 | 1 | |
| Litres / second (l / s) | 3.6 | 13.198 | 15.85 | |
| **Temperature:** | °C | °F | K | |
| Degrees Celsius (°C) | 1 | [(9/5)x°C]+32 | °C+273.16 | |
| Fahrenheit (F) | (5/9)x(°F-32) | 1 | n.a | |
| Kelvin (k) | K-273.16 | n.a | 1v | |

## Size of pipe and water flow rate

| DN mm | D mm | Inches | Flow rate ($m^3/h$) depending on the speed of the water Suction (1.2 m/s) | Discharge (2 m/s) |
|---|---|---|---|---|
| 15 | 20 | 1/2" | 1 | 1.6 |
| 20 | 25 | 3/4" | 1.6 | 2.7 |
| 25 | 32 | 1" | 2.7 | 4.4 |
| 32 | 40 | 1 1/4" | 4.4 | 7.3 |
| 40 | 50 | 1 1/2" | 7.5 | 12.5 |
| 50 | 63 | 2" | 11 | 18.4 |
| 65 | 75 | 2 1/2" | 15.7 | 26.1 |
| 80 | 90 | 3" | 22.3 | 37.1 |

Due to ongoing changes, some photographs may not match the products exactly.

Printed on paper from sustainable forests. Fluidra contributes to environmental protection.

PEFC · LONG-LIFE ISO 9706 · PH NEUTRAL · HEAVY METAL ABSENCE CE 94/62 · ELEMENTAL CHLORINE FREE GUARANTEED

## General diagram of installation of swimming pool equipment

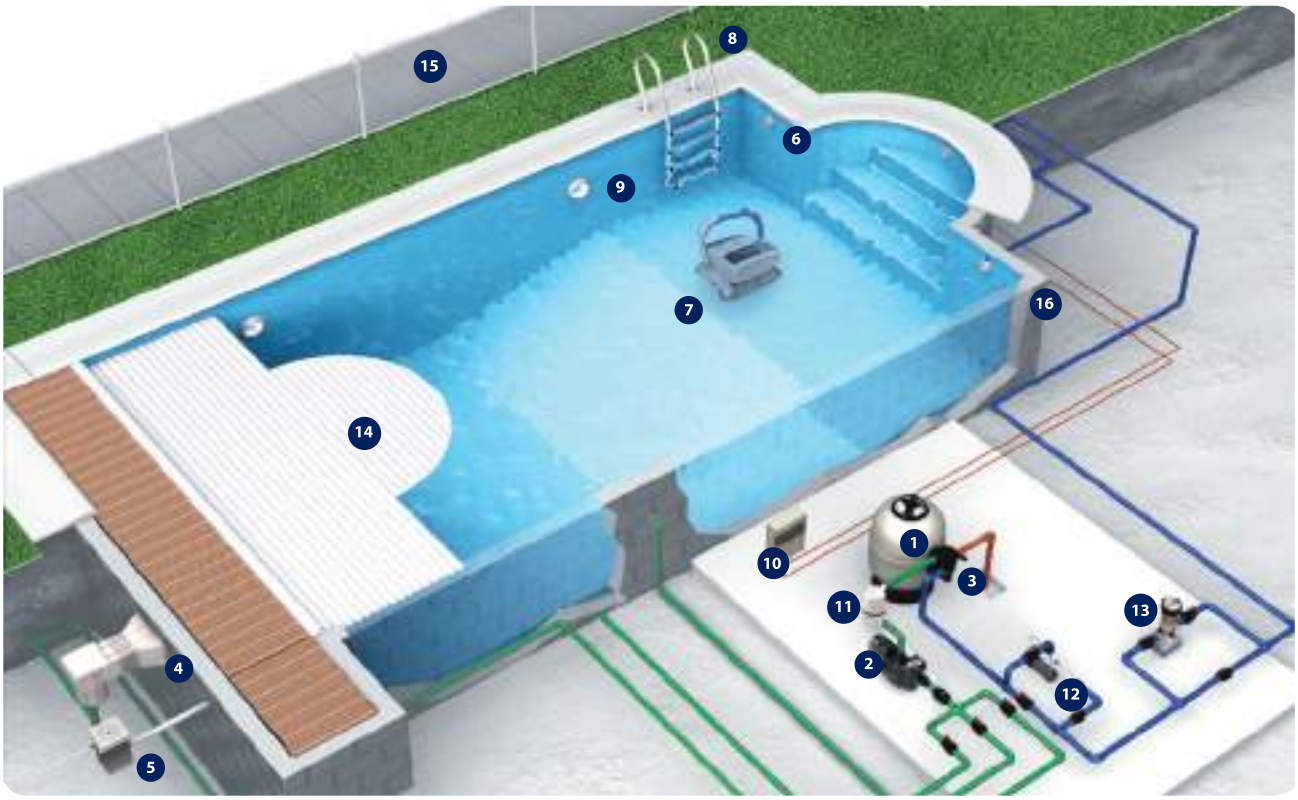


1. Filter
2. Pump
3. Multiport valve
4. Skimmer
5. Level regulator
6. Return inlet
7. Automatic bottom cleaners
8. Ladder
9. Light spot
10. Electric control cabinet
11. Hydrospin
12. Heat exchanger
13. Chlorine dispenser
14. Automatic pool cover
15. Safety barriers
16. Pool shell

## Filter and pump selection table

| Pool volume | Daily filtration | Filtration speed | Filter Ø | Plumbing | | Pump | Sand |
|---|---|---|---|---|---|---|---|
| $m^3$ | h | $m^3/h/m^2$ | mm | mm | inches | HP | kg |
| 40 | 8 | 50 | 350 | 50 | 1 1/2" | 0.3 | 40 |
| 40-50 | 8 | 50 | 400 | 50 | 1 1/2" | 0.5 | 60 |
| 50-60 | 8 | 50 | 450 | 50 | 1 1/2" | 0.5 | 70 |
| 60-75 | 8 | 50 | 500 | 50 | 1 1/2" | 0.5 | 100 |
| 75-90 | 8 | 50 | 560 | 50 | 1 1/2" | 0.75 | 130 |
| 90-115 | 8 | 50 | 600 | 50 | 1 1/2" | 1 | 160 |
| 115-130 | 8 | 50 | 650 | 63 | 2" | 1 | 175 |
| 130-170 | 8 | 50 | 750 | 63 | 2" | 1.5 | 300 |
| 170-200 | 8 | 50 | 800 | 63 | 2" | 2 | 330 |

Best in class

Best value for money

Exclusive to the professional channel*

Unique sustainable quality

Recommended for public pools

3-year warranty

New product

Until end of stocks

Fluidra Connect compatible

*Product recommended for sale in physical stores due to the product's specialized and complex nature and/or its installation.

# TABLE OF **CONTENTS**


A
Accessories 179
Accessories for minispas 384
Accessories for minispas 585
Accessories - Saunas 391
Air blowers 386
Air blowers 587
Air-water heat pumps for indoor installation 404
Air-water heat pumps for indoor installation 593
Air-water heat pumps for outdoor installation 400
Air-water heat pumps for outdoor installation 592
Algicides 173
Alkorplan 150/100 reinforced liner 266
Alkorplan 200/100 reinforced liner 264
Alkorplan liner accessories 268
Aquarmony underwater music system 257
AstralPool Bike 58
AstralPool Bike 436
AstralPool pool shell material color range 71
Attachments for competition equipment 613
Automatic covers 296
Automatic covers: Above-ground models 298
Automatic covers: Accessories 314
Automatic covers: comparison 286
Automatic covers: Display models 307
Automatic covers: Manufacturing specifications 316
Automatic covers: Polycarbonate slats and steps 313
Automatic covers: PVC slats 311
Automatic covers: Step slats 312
Automatic covers: Submerged models 302
Automatic covers: Wireless remote controls with key 315
Automatic filter bag cleaners 223
Automatic pool cleaners 224
Automatic pool cleaners for public pools 562
Automatic regulation and control equipment 556
Automatic UV disinfection 547
Automatic UV disinfection - Residential pools 198
B
Blower pumps 165
Blow-moulded sand filters 124
Blue Connect range 180
Blue range accessories 182
Blue range products 181
Bluespring 483
Bobbin wound filters 494
Bobbin-wound sand filters 139
Bromine disinfectants 173
C
Cartridge filters 121
Centrifugal pumps 527
Classification of liners depending on the pool 272
Cleaners 177
Coding structure for private spas with cabinet 363
Collectors for valve manifolds 328
Colour chart for spas 363
Colour chart for spas 566
Compact filtration for spas 377
Compact filtration for spas 577
Compacts with interior installation 140
Compacts without interior installation 140
Competition pool systems 602
Complements for spas 378
Complements for spas 578
Concentrated algicides 174
Concrete pool - 15 L Skimmers 72
Concrete pool - 17.5 L Skimmers 73
Concrete pool - ABS Inlets 464
Concrete pool - Drain accessories 85
Concrete pool - Drain accessories 462
Concrete pool - Drain grilles 463
Concrete pool - Drains 81
Concrete pool - Drains 460
Concrete pool - Level regulators 80
Concrete pool - Skimmer accessories 76
Concrete pool - Stainless steel inlets 93
Concrete pool - Stainless steel inlets 94
Concrete pool - Stainless steel inlets 465
Concrete pool - Stainless steel skimmer accessories 80
Concrete pool - Stainless steel skimmers 77
Concrete pool - Wall bushings 95
Concrete pool - Winter accessories 95
Conditions for accepting an order 274
Connect & Go products 30
Connect & Go products 36
Continuous flocculation system 556
Control boxes 155
Control boxes 521
Countercurrent swimming equipment 159









D
Countercurrent swimming equipment – Selection guide 158
Dehumidifiers 411
Dehumidifiers 597
Diffuser filter 328
Disinfectants with chlorine 170
Diving boards and trampolines 49
Dosing equipment 209
Dosing pumps 206
Dosing pumps 550
E
Electrical accessories for spas / mini spas 385
Electrical accessories for spas / mini spas 586
Electric heaters 407
F
Filter ring manifolds for 1" laterals 327
Filter ring manifolds for 3/4" laterals 326
Filtration media & accessories 523
Filtration media and accessories 147
Fitt B-Active and Fitt Idroflex 321
Floats 607
Flocculants 175
Fluidra Connect 420
Fluidra connect accessories 37
Fluidra Connect accessories 35
Fluidra Connect accessories 424
fluidra products nn compatible 32
Freepool² 540
G
Gauge panel unit 146
Glass tiling for pools 275
Glass tiling for spas and wellness facilities 281
Glass tiling: Projects 283
Glass tiling: Technical specifications 284
Grilles for overflow 62
Grilles for overflow 452
H
Halogen lighting 250
Handrail attachment support 433
Handrails 432
High-performance laminated sand filters 132
Hoses 233
Hydrospin pre-filter 121
I
Iguazu showers 53
In-ground overflow commercial spas 567
In-ground residential spas 375
Injection moulded sand filters 123
Inoxpool 358
Inoxpool 477
Installation diagrams 117
Internet of Pools 16
L
Laghetto above ground pools 330
Laminated filters 489
Laminated sand filters 127
Lane rope accessories 609
Lane ropes 606
Lane rope storage equipment 608
LED lighting - control systems 248
LED lighting - LumiPlus 236
Lifeguard chairs 434
Life-saving accessories 434
Liner accessories 270
Liner accessories 379
Liner accessories 580
Liner and prefabricated pool - 15L Skimmers 96
Liner and prefabricated pool - 15L Skimmers 97
Liner and prefabricated pool - ABS Inlets 469
Liner and prefabricated pool - Drains 102
Liner and prefabricated pool - Drains 466
Liner and prefabricated pool - Main Drain accessories 468
Liner and prefabricated pool - Level regulators 107
Liner and prefabricated pool - Stainless steel inlets 112
Liner and prefabricated pool - Stainless steel inlets 471
Liner and prefabricated pool - Wall bushings 113
Liners for stairs 273
M
Manual pool cleaners - Blue Line Range 225
Manual pool cleaners - Classic Range 228
Manual pool cleaners - Shark Range 227
Modular prefabricated pools 474
Modular prefabricated pools - One-off projects 476
Multi-action disinfectants with chlorine 171
Multi-purpose pods 175
N
Nanofiber filter 120
Neolysis for public pools 545
Net'n'Clean Integrated Cleaning System 231
Niches 254
O
OC-1 Filters 122
Optional equipment 364
Optional equipment 566
Ornamental water features - Cannons and waterfalls 59

# TABLE OF **CONTENTS**


P
Our range of spas 362
pH & Chlorine automatic regulations - Residential pools 202
Platforms 50
Pluvium showers 52
Pocket gauges 188
Pool access - Accessories, anchoring fixtures and grips 47
Pool access - Anchoring sockets and handrails 429
Pool access - Asymmetrical and easy access ladders 44
Pool access - Disabled access 430
Pool access - Elegance ladders 40
Pool access - Exit grab rails 428
Pool access - Exit grab rails and lower end 46
Pool access - Ladders 426
Pool access - Mixed model ladders 43
Pool access - Standard model ladders 42
Pool access - Wall model ladders 41
Pool cleaner accessories 224
Pool cleaner accessories 564
Pool cover accessories 291
Pool Jet accessories 383
Pool Jet accessories 584
Pool shell components - Range of colours 70
Prefabricated liner pools - Skimmer accessories 101
Premium thermal covers for summer 288
Pressure fluid handling PVC accessories 324
Pressure fluid handling PVC PN-16 fittings 322
Professional range 566
Public pool filtration coding 488
R
Regulators 169
Reinforced PVC protection covers 291
S
Salt electrolysis and pH/Cl control 542
Salt water electrolysis - Residential pools 193
Saunas 388
Saunas 589
Selector valves 142
Self-priming pumps 152
Self-priming pumps 526
Showers - Accessories 57
Showers - Knob valves 56
Showers - Outdoor footbaths 436
Showers - Showers with timers 56
Showers - Showers with timers 435
Showers - Shower trays 58
Showers - Shower tunnels 435
Showers - Solar showers 54
Signage 611
Skimfilters 114
SkyPool Commercial Pools 480
Slides 50
Sopraliner 150/100 reinforced liner 261
Spa range - Essential range 371
Spa range - Ocean Dreams range 368
Spa range - Swimspa range 373
Stainless steel public spas 576
Stainless steel public spas with overflow channel 574
Standard equipment 365
Storage rollers for covers 293
Strainers 534
Supports for valve manifolds 522
Swimming pool competition podiums 604
Swimming pool heating solutions 396
Swimming pool shell material packs 115
Swimming pool water treatment solutions 192
T
Test kits and photometers 188
Thermal covers - Bubble 287
Thermal covers - Foam 289
Top access automatic cleaners 217
Transformers and accessories 255
Turning panels 612
Types of coatings 363
V
Valve manifolds 519
Valves and hoses 536
Variable speed pumps 151
W
Water-air chillers for indoor or outdoor installation 406
Water games and ornamental water features 437
Water meters 556
Water meters & Control devices 212
Water polo goal 613
Water-water exchanger 408
Water-water exchanger 594
Water-water plate heat exchanger 595
Winter accessories 95
Winterising products 178









INTERNET OF POOLS




POOL SURROUND EQUIPMENT



POOL SHELL EQUIPMENT



FILTRATION



PUMPS



WATER TREATMENT PRODUCTS



WATER TREATMENT EQUIPMENT



CLEANING EQUIPMENT



POOL LIGHTING



POOL LINING MATERIAL



COVERS AND ROLLERS



PVC FITTINGS FOR POOLS



POOLS

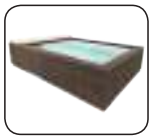

SPAS AND SAUNAS



HEATING AND DEHUMIDIFICATION



COMMERCIAL POOLS







# INTERNET OF POOLS

16 • Internet of Pools
30 • Connect & Go products
35 • Fluidra Connect accessories
36 • Connect & Go products
37 • Fluidra connect accessories

# Internet of Pools

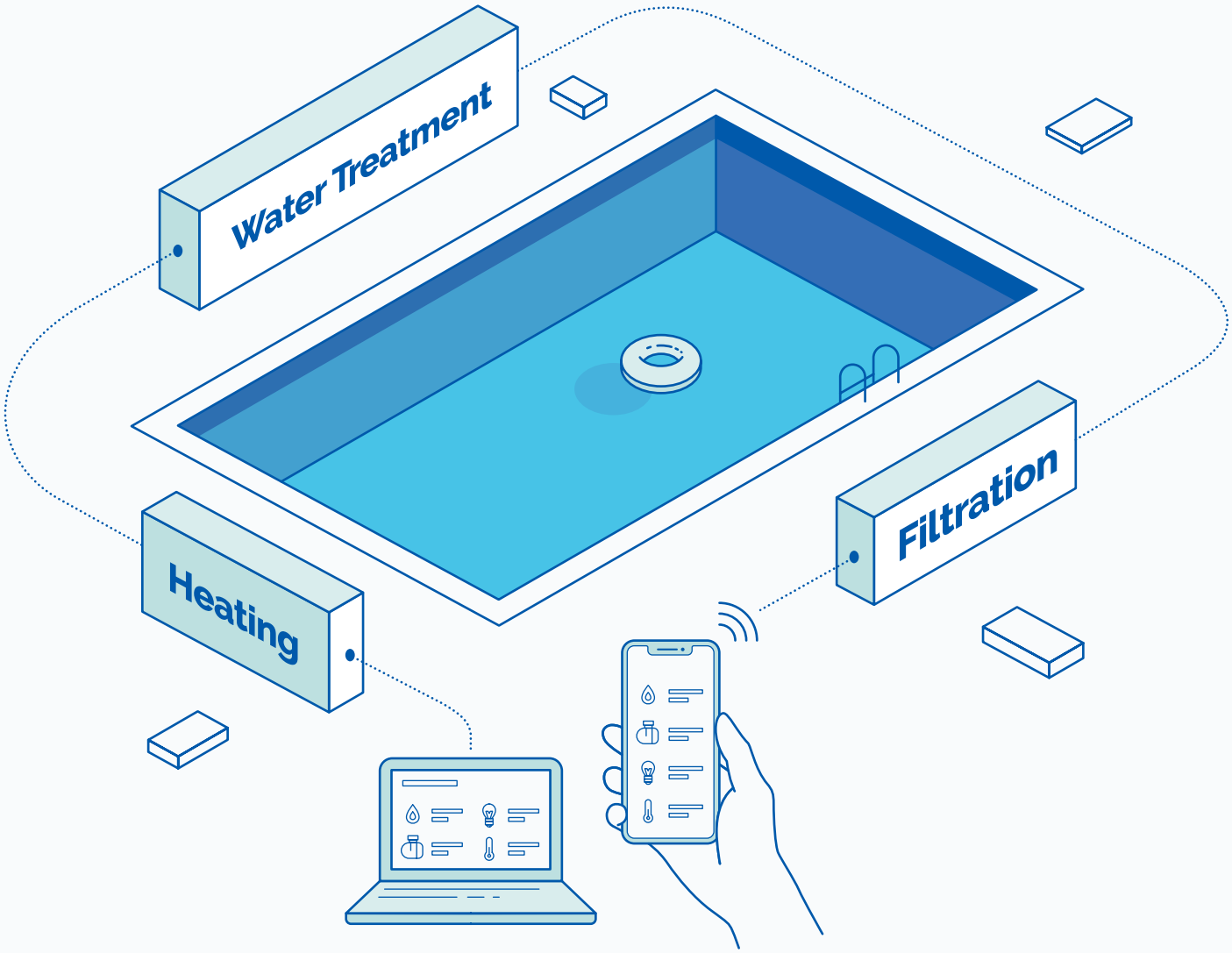


## Your assistant for the installation, control, and maintenance of your swimming pools

### Peacefulness

Users and professionals are able to access in real-time from any place and remotely to all the elements of the pool, in order to check their proper functioning.

### Comfort

Pool professionals will be able to carry out the remote management of every swimming pool (filtration, water treatment, heating, etc...) and outdoor equipment (lighting, irrigation, etc...).

### Sustainability

The automation technology allows an efficient and eco-friendly pool equipment control for a perfect pool experience.

### Pool Experience

Connected devices or connected pools allow to share easily pool information, improving the user experience and its maintenance.

# A Fluidra connected solution for each type of pool

Fluidra's Smart Pools Assistants works on all type of pools thanks to a wide range of products.

## TEST STRIPS

### **Blue Check** + Blue Riiot APP

*Basic solution*

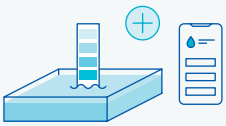

- Measure the quality of the water using the test strips.
- Follow the App-guide with personalized tips for treating your pool water.
- Access the status of your pool water in real time, as well as weather data for your location.

## CONNECTED SENSORS

### **Blue Connect** + Blue Riiot APP

*Semi-professional solution*



- Smart pool water analyzer that measures water quality.
- When action is needed, a notification is sent and personalized advices help to optimize the use of chemicals.
- Access the status of your pool water in real time, as well as weather data for your location.

### **Blue Connect Plus** + Blue Riiot APP

*Semi-professional solution*



- Smart pool water analyzer with total monitoring of water parameters.
- When action is needed, a notification is sent and personalized advices help to optimize the use of chemicals.
- Pool Professional Web access to monitor all pools remotely.

## CONNECTED DEVICES

### **Elite Connect / Control Connect** + Pool Station APP

*Professional solution*



- Smart control of water quality.
- Easy access for users and professionals through the APP as well as the web portal.
- Possibility of controlling other external elements such as filtration, waterfalls, lighting, irrigation...

## CONNECTED POOLS

### **Fluidra Connect & Go** + Fluidra Connect APP

*Complete professional solution*



- Remote management of the pool (filtration, treatment and extras).
- More efficient use of energy consumption (sustainability).
- Installation pre configured through products kit. Reduces installation time by 80%.

### **Fluidra Connect + NN compatible products** + Fluidra Connect APP

*Tailor-made professional solution*

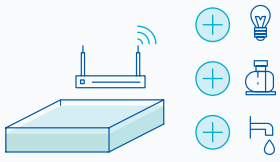

- Allows control, diagnosis and management of the pool remotely.
- Control multiple external elements such as filtration, waterfalls, lighting, irrigation...
- Maintenance management of several pools from a single portal.

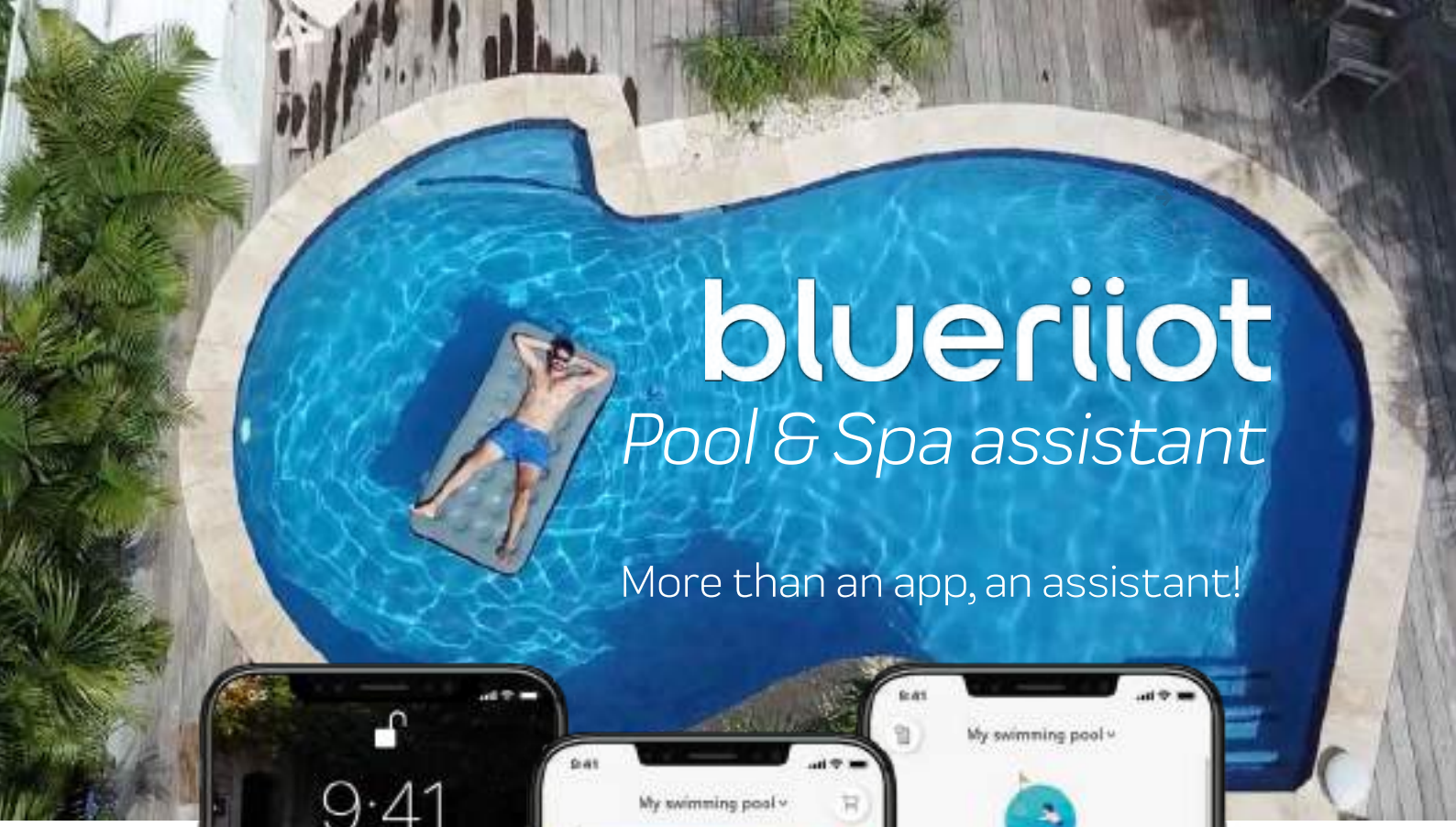





## Blue Riiot Pool & Spa Assistant digitalises swimming pools and spas

Blue Riiot Pool & Spa Assistant is an application that helps the user to maintain and enjoy his swimming pool or his spa, thanks to the integration of connected products and smart home services. Blue Riiot Pool & Spa Assistant gives the user the chance to enjoy his pool with peace of mind.

In one single App, the user benefits several features :

- Access to pool data, water quality, and weather at the pool in real time.
- Easy configuration and maintenance of Blue Riiot connected products.
- Tailor-made recommandations to obtain a crystal clear water. The right dosis of the right product, at the right time.
- Smart Home integration for infinite possibilities.

## *Blue Riiot Pool & Spa Assistant* compatibility & features




## Chemicals compatibility

The users can choose to use Blue Riiot Pool & Spa Assistant with a specific product line. He will benefit from precise and adapted advices to this range of products.

## Smart home compatibility

*Blue Riiot Pool & Spa Assistant* is compatible with the Amazon Alexa voice assistant, Google Home voice assistant and IFTTT platform.




= IF This Then That

"If *Blue Connect* sends a measurement, log it in an excel file"

## *Blue Connect*, the smart pool analyser



*Blue Connect* is a smart device that analyses the quality of the water automatically. Combines with the free app Blue Riiot Pool & Spa Assistant, it informs the user how to balance out the pool in easy, straight forward steps!

The device is equipped with an innovative sensor that measures the main parameters to keep a crystal clear water: pH, water temperature, ORP (disinfectant level) and conductivity.

### Always connected

*Blue Connect* is always connected thanks to different technologies:

**Sigfox**

*Blue Connect* continuously sends the data to the cloud via a network dedicated to connected devices.

**Bluetooth**

*Blue Connect* user can take an instant measure directly with Bluetooth.

**Wi-Fi**

*Blue Connect* works with the Wi-Fi network thanks to the Wi-Fi gateway *Blue Extender*.

### Plug & Play

*Blue Connect* works with **all types of pools** and its installation takes only 3 minutes

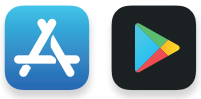

1. Download the App Blue Riiot



2. Activate Blue Connect

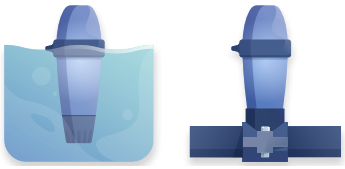

3. Install in the water OR in the technical room (***Blue Fit50***)



4. Enjoy

## Different packs for different needs

### *Blue Connect GO*



- Blue Connect, the analyser
- Temperature, pH and ORP (platinum)
- Compatible chlorine and bromine pools and spas
- Not compatible with salt chlorinator pools and spas
- Works with Bluetooth
- Blue Riiot Pool & Spa assistant

### *Blue Connect**



- Blue Connect, the analyser
- Temperature, pH, ORP (platinum) and conductivity (salinity)
- Compatible chlorine and bromine pools and spas
- Not compatible with salt chlorinator pools and spas
- Works with Bluetooth
- Up to 2 automatical measurements
- Blue Riiot Pool & Spa assistant

* This pack is available until out of stock

### *Blue Connect Plus (Platinum)**



- Blue Connect, the analyser
- Temperature, pH, ORP (Platinum) and conductivity (salinity)
- Compatible chlorine and bromine pools and spas
- Not compatible with salt chlorinator pools and spas
- Works with Bluetooth
- Up to 20 automatical measurements
- Blue Riiot Pool & Spa assistant
- Blue Riiot Premium lifetime
- Blue Fit50 included
- Virtual Pool Care platform lifetime (Pools module)

* This pack is available until out of stock

### *Blue Connect Plus (Gold)*



- Blue Connect, the analyser
- Temperature, pH, ORP (Gold) and conductivity (salinity)
- Compatible chlorine, bromine and salt chlorinator pools and spas
- Works with Bluetooth
- Up to 20 automatical measurements
- Blue Riiot Pool & Spa assistant
- Blue Riiot Premium lifetime
- Blue Fit50 included
- Virtual Pool Care platform lifetime (Pools module)

## *Blue Check*, the "smart" test strip




Blue Check is a set of 50 test strips to use with the free application *Blue Riiot Pool & Spa Assistant* that analyses the quality of the water by taking measurements manually. The app gives customised advices to maintain the pool. A simple solution to keep the water clean with peace of mind.

**Blue Check** measures:

- pH (6.2 - 8.4)
- Free chlorine (0 - 10)
- Bromine (0 - 20)
- Total alkalinity (0 - 240)
- Total hardness (0 - 1000)
- Cyanuric acid (0 - 300)



Blue Check is a complementary solution of Blue Connect, the smart pool analyser (see p. 180). Thanks to Blue Check, you can ensure that the pool water is in balance by verifying other parameters such as the alkalinity, the hardness and the cyanuric acid. More info p. 181.

**EASY TO USE**

1

Make the test and enter the strip's values in the app *Blue Riiot Pool & Spa Assistant*



2

Access the pool status and weather information



3

Receive custom recipe on which chemicals to use in which quantity



## *Virtual Pool Care* platform

**One platform, several possibilities**

*Virtual Pool Care* is web platform designed specifically for the pool and spa industry. It offers you the tools you need to organize your business, promote your products, services & shops towards Blue Riiot users.

viirtual pool care

Virtual Pool Care is available for computers, tablets or phones.

# A module for each type of activity

**1**

**Pools**

Monitor your pool & spa park remotely on the platform *Virtual Pool Care*

**2**

**Vendor Locator**

List your shop(s) and products in the app *Blue Riiot Pool & Spa Assistant*

## 1 Pools

Monitor your pool & spa park remotely on the platform *Virtual Pool Care*

Pools module allows local pool professional to monitor the pool remotely, for the ultimate peace of mind. Register for free on virtualpoolcare.io and access pools equipped with *Blue Connect.*

**Advantages:**

- All your connected pools at first glance.
- Follow live the analyses of your clients' Blue Connect.
- Perform accurate and professional diagnosis.
- Avoid unnecessary travels.
- Anticipate and advise your clients on possible preventive actions.



**Easy to use**

1. Add your customers' pools using the serial number or the key of the Blue Connect.
2. A request is sent to your customer to ask his permission to share his data with you.
3. As soon as he accepts, you have access to his pool's data

## 2 Vendor Locator

List your shop and products into the app *Blue Riiot Pool & Spa Assistant*

You have one or several shops in the fields ? Vendor locator allow you to list your shop(s) into the reseller map of the *Blue Riiot Pool & Spa Assistant* app. The users can make a wish list and send it to the shop to prepare their order.



**Advantages:**

- Promote your shop and the products you sell very easily to a very targeted audience.
- Generate new leads geographically.
- Receive wishlists straight from the user and generate sales.
- Your shop listed as the favorite shop and first in the list.



**Interested?** Contact Riiot Labs for a price offer via virtualpoolcare.io.



FLUIDRA CONNECT®

Available on the iPhone App Store

ANDROID APP ON Google play

# The most flexible solution for a smart connected pool

- **1 power center cabinet including the Connect Box** where all pool equipment is wired (available in different versions to suit most pools)
- **2 dedicated Pool Pro remote access portals:**
  - -NN PRO smartphone APP dedicated to easy configuration and remote monitoring of installed pools
  - -Fluidraconnect.com dedicated Web portal to manage all pools at a glance
- **1 dedicated NN enduser app** to manage pool at anytime from anywhere.

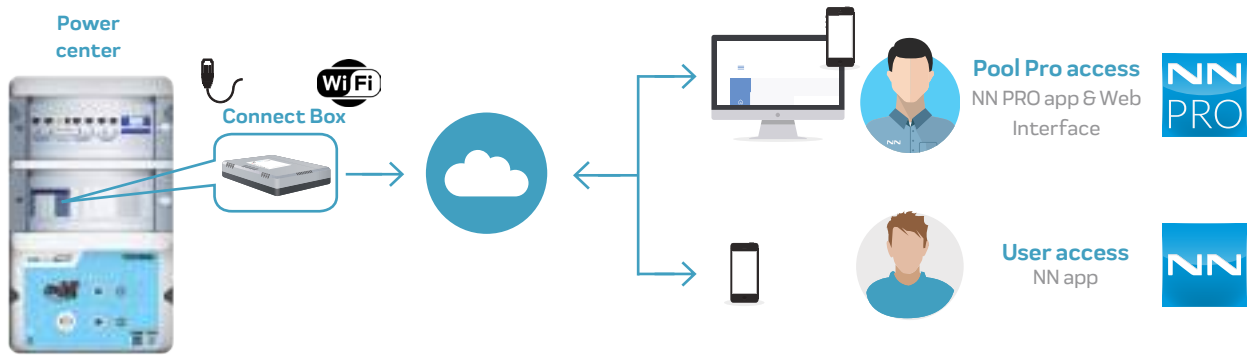


**Fluidra Connect power center cabinet**

The brain of the pool including all electrical safeties and control switches. Also includes Connect Box linked to the cloud using either Wi-Fi or Enthernet cable.

**Fluidra products NN compatible***

Smart control & exchange to allow a perfect pool experience. Plug & Play installation. More than 100 compatible Fluidra products.

**Standard products**

On/Off & scheduling control of any standard pool equipment on the market.

**Modbus products****

Ability to control Modbus products for tailor-made use.

**Connect & Go solution**

Pre-wired power centers for an easy installation adapted to most pools.

See page 26

* See page 32 for the full list of NN compatible products.

** Upon special request - compatibility and control tables to be shared case by case.

Fluidra Connect power centers are available as Connect & Go pre-wired cabinets to ease installation process : the perfect solution for new pools

FLUIDRA CONNECT®

## **Fluidra Connect:** Pool Professional benefits

### **Differenciation with Connected Pools.**
Better offer and service for the End User.

### **Fast & Easy installation.**
Drastically reduces the installation time thanks to pre-wired power center cabinets (Connect & Go). Easy on-site configuration using NN PRO app.

### **Savings.**
Cut back cost on better time and resource managment. Can save unnecessary trips, petrol costs, toll fees, etc.

### **Remote maintenance.**
Piece of mind for Maintenance Professionals. Preventing and solving problems remotely using Fluidra Connect professional dashboards to see all pools at a glance.

NN PRO professional APP



www.fluidraconnect.com
web portal



## **Fluidra Connect:** Consumer benefits

### **Peace of mind.**
Dedicated user app for a pool always ready to use in the top conditions. Healthy water for you and your family.

### **Savings.**
A connected pool helps to save water, energy and use less chemical products.

### **Easy control.**
Access and control your pool 24/7 from anywhere, at any time.

NN consumer APP



FLUIDRA
# CONNECT
CONNECT & GO

Available on the iPhone App Store
ANDROID APP ON Google play

## Convenience and easy installation: The smartest connected pool solution

1. 1 professional APP for easy configuration
2. Pre-wired power center cabinets for easy installation
3. Control any pool equipment
4. Advanced management of NN compatible products





**NN PRO**
**Professional APP**

- convenient on-site configuration
- pool sites monitoring at a glance



## Pre-wired power center cabinets for fast and easy installation

- Plug & Play
- Available in different versions to suit most pools
- Ready to use with all NN compatible products
- Built-in Wi-Fi and Ethernet connectivity

FLUIDRA CONNECT®

CONNECT & GO

# Convenience and easy installation: The quickest installation solution for new pools



Once Connect & Go power center cabinet is installed and pool equipment wired to it, simply follow 4 easy steps:

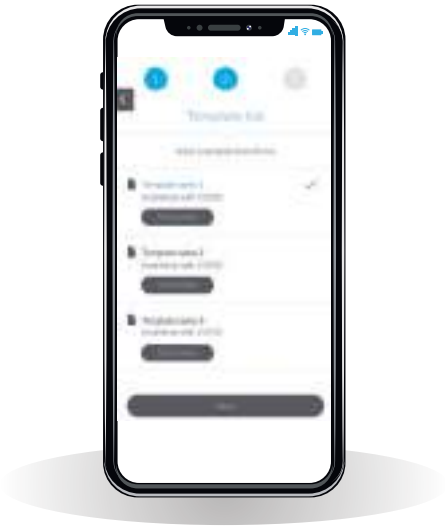

1. Download the NN PRO app and create your professional user account.
2. Scan Connect Box QR code to register the Connect & Go power center cabinet.
3. Scan power center cabinet barcode to get the predefined pool configuration template.
4. Launch NN compatible products auto detection using the app to get the pool dashboard.

- Configuration is complete whitin a very short time
- Pool owner will also be able to access his pol using the NN consumer app




www.fluidraconnect.com

FLUIDRA CONNECT®

CONNECT & GO

# Installation Diagram








CONNECT & GO
POWER CENTER CABINET

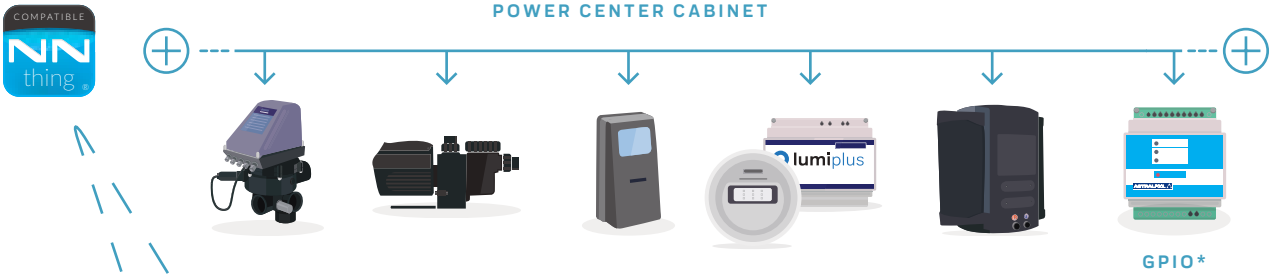


GPIO*

Device with 4 inputs & 4 outputs provided with Connect & Go power center cabinet to manage standard products




More than 100 compatible Fluidra Connect products available

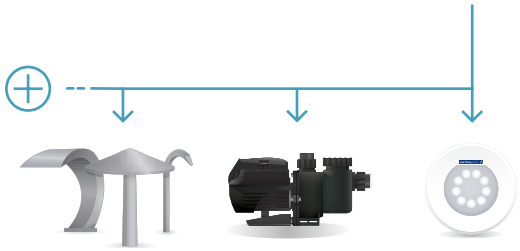

Any standard product can be controlled

* 1 GPIO is installed inside Connect & Go power center cabinets. Additional GPIO can be purchased separately to control more equipment. See code 62368 on page 35.

# Connect & Go

## CONNECT & GO

### Range map




| | | Pre-defined templates | | | | | |
|---|---|---|---|---|---|---|---|
| **Connect & Go version** | **Fluidra code** | **1 pump** (+ on/off button) | **2 pumps** (+ on/off buttons) | **White light** (+ on/off button) | **LumiPlus RGB color light** | **Light Transformer included** | **Extra device** (+ on/off button for standard chlorinator, booster pump, etc...) |
| **Basic** | **70874(C) / 70875(D)** | ✓ | | ✓ | | | |
| **Basic Plus** | **70554(C) / 70555(D)** | ✓ | | ✓ | | | ✓ |
| **Net'N'Clean** | **70556(C) / 70557(D)** | | ✓ | | | | ✓ |
| **Complete White** | **70697(C) / 70698(D)** | | ✓ | ✓ | | ✓ | ✓ |
| **Complete RGB** | **70699(C) / 70700(D)** | | ✓ | | ✓ | ✓ | ✓ |

FLUIDRA CONNECT
INTERNET OF POOLS

## CONNECT & GO PRODUCTS

THE FUTURE IS HERE

**Convenience & easy installation**

**A range of Connect & Go power center cabinets is offered to suit most residential pools configurations.**

**Connect & Go power center cabinets contain all electrical protections and switches to manage pool equipment. Everything is pre-wired to ease installation process so it is the perfect solution for new pools, while also being adapted to retrofit situation (simply replace the whole cabinet with Connect & Go).**

**Once installed, simply follow 4 easy steps:**

**1. Download the NN PRO app and create your professional user account.**

**2. Scan Connect Box QR code to register the Connect & Go power center cabinet.**

**3. Scan power center cabinet barcode to get the predefined pool configuration template.**

**4. Launch NN compatible products auto detection using the app to get the pool dashboard.**

| Type | Intensity range | Power Range 1-phase 230V |
|---|---|---|
| C | 4A - 6.3A | ¾ HP - 1 HP |
| D | 6A - 10A | 1.5 HP |



### Basic

Control and power devices for a single-phase pump and control devices for lighting.

- IP-65 protection rating. Two transparent lids with lock and key.
- Products compatible with 220/240 V single-phase (P+N+T) 50 Hz/60Hz input.
- Internet connection required.
- Manual (selector) or automatic lighting control and pump.
- Includes Connect Box and 1 GPIO wiring.
- Enables optional temperature sensor connection (code 69682) with no need for accessories.
- Possibility of connecting a levels box.
- External transformer needed for lighting.
- Expansion modules can be connected for white, RGB and GPIO lighting.

| | Code | Standard Pack | Standard Weight in kg | Standard Volume in $m^3$ |
|---|---|---|---|---|
| Basic C | **70874** | 1 | - | - |
| Basic D | **70875** | 1 | - | - |



### Basic Plus

Control and power devices for a single-phase pump plus a control device for lighting.

- IP-65 protection rating. Two transparent lids with lock and key.
- Products compatible with 220/240 V single-phase (P+N+T) 50 Hz/60Hz input.
- Internet connection required.
- Manual (selector) or automatic control for lighting, pump and auxiliary devices.
- Includes Connect Box and 1 GPIO wiring.
- Enables optional temperature sensor connection (code 69682) with no need for accessories.
- Possibility of connecting a levels box.
- External transformer needed for lighting.
- Expansion modules can be connected for white, RGB and GPIO lighting.

| | Code | Standard Pack | Standard Weight in kg | Standard Volume in $m^3$ |
|---|---|---|---|---|
| Basic Plus C | **70554** | 1 | - | - |
| Basic Plus D | **70555** | 1 | - | - |

+ info FLUIDRA CONNECT
Further information at
**www.fluidraconnect.com**

FLUIDRA CONNECT
INTERNET OF POOLS

## CONNECT & GO PRODUCTS



### Net'N'Clean

Control and power devices for a single-phase pump plus a control another device.

- IP-65 protection rating. Two transparent lids with lock and key.
- Products compatible with 220/240 V single-phase (P+N+T) 50 Hz/60Hz input.
- Internet connection required.
- Manual (selector) or automatic control for pump, an auxiliary pump and an auxiliary device.
- Includes Connect Box and 1 GPIO wiring.
- Enables optional temperature sensor connection (code 69682) with no need for accessories.
- Possibility of connecting a levels box.
- External transformer needed for lighting.
- Expansion modules can be connected for white, RGB and GPIO lighting.

| | Code | Standard Pack. | Standard Weight in kg | Standard Volume in $m^3$ |
|---|---|---|---|---|
| Net'N'Clean C | **70556** | 1 | - | - |
| Net'N'Clean D | **70557** | 1 | - | - |



### Complete White

Control and power devices for two single-phase pump plus a control and power for white lighting.

- IP-65 protection rating. Three transparent lids with lock and key.
- Products compatible with 220/240 V single-phase (P+N+T) 50 Hz/60Hz input.
- Internet connection required.
- Manual (selector) or automatic control for pump, an auxiliary pump, an auxiliary device and lighting.
- Includes Connect Box and 1 GPIO wiring.
- Enables optional temperature sensor connection (code 69682) with no need for accessories.
- Possibility of connecting a levels box.
- A 100 VA transformer is included for lighting.
- Expansion modules can be connected for RGB and GPIO lighting.

| | Code | Standard Pack. | Standard Weight in kg | Standard Volume in $m^3$ |
|---|---|---|---|---|
| Complete White C | **70697** | 1 | - | - |
| Complete White D | **70698** | 1 | - | - |



### Complete RGB

Control and power devices for two single-phase pump plus a control and power for RGB lighting.

- IP-65 protection rating. Three transparent lids with lock and key.
- Products compatible with 220/240 V single-phase (P+N+T) 50 Hz/60Hz input.
- Internet connection required.
- Manual (selector) or automatic control for pump, an auxiliary pump and an auxiliary device.
- Includes Connect Box and 1 GPIO wiring.
- Enables optional temperature sensor connection (code 69682) with no need for accessories.
- Possibility of connecting a levels box.
- A 100 VA transformer is included for lighting.
- Expansion modules can be connected for white and GPIO lighting.

| | Code | Standard Pack | Standard Weight in kg | Standard Volume in $m^3$ |
|---|---|---|---|---|
| Complete RGB C | **70699** | 1 | - | - |
| Complete RGB D | **70700** | 1 | - | - |

**Check out the expansion modules available for GPIO, RGB, etc.**

FLUIDRA CONNECT
INTERNET OF POOLS

# FLUIDRA PRODUCTS NN COMPATIBLE

All product platforms below are NN compatible to allow a smart control & exchange with Fluidra Connect and associated smartphone apps and website.

User(s) can see more operating data and be able to access to more settings compared to standard products.

NN is the acronym used to name the Fluidra Connect apps that are available on both iOS (Apple®) and aOS (Android™) platforms and describe smart compatible products.

"NN" icon indicates the Consumer app.

"NN PRO" icon indicates the Professional app.

"NN thing" icon is used to highlight our "NN compatible" products that can be controlled with Fluidra Connect automation, bringing advanced features to user.

## Water Treatment Equipment

| |  |  |  |  |
|---|---|---|---|---|
| | Automatic regulations & dosing | | | |
| | **Control Connect** | **Dual pH-EV Basic Control Plus** | **Control Basic Plus** | **Redox Basic EV Plus** |
| **More info on page** | 202 | 204 | 203 | 203 |

| |  |  |  |  |
|---|---|---|---|---|
| | Dosing Pumps | Salt Water Chlorinators and Hybrid systems | | |
| | **Optima Plus** | **Elite Connect** | **Smart Next** | **Neolysis S* Neolysis LS*** |
| **More info on page** | 207 | 194 | 195 | 198 |

* Use of a NN comunication kit (code 60363) is required.

FLUIDRA CONNECT INTERNET OF POOLS

# FLUIDRA PRODUCTS NN COMPATIBLE

## Filtration

| | | |
|---|---|---|
| |  |  |
| | Variable Speed pump | Automatic multiport valve |
| | **Victoria Plus Silent VS** | **VRAC III automatic valve** |
| **More info on page** | 141 | 146 |

## Heating & Dehumidifiers

| | | | | |
|---|---|---|---|---|
| |  |  |  |  |
| | Heat pumps | | | |
| | **AstralPool Heat III** | **Pro Elyo Inverboost** | **Evoline** | **ProHeat II** |
| **More info on page** | 400 | 401 | 402 | 404 |

## Heating & Dehumidifiers

| | |
|---|---|
| |  |
| | Electric heaters |
| | **Compact ElectricHeat** |
| **More info on page** | 408 |

FLUIDRA CONNECT
INTERNET OF POOLS

# FLUIDRA PRODUCTS NN COMPATIBLE

## Lighting

| |  |  |  |  |
|---|---|---|---|---|
| | LumiPlus LED lighting | | | |
| | **FlexiNiche V2 & V1 RGB** | **FlexiSlim V2 & V1 RGB** | **FlexiRapid V2 & V1 RGB** | **Design RGB** |
| **More info on page** | 239 | 239 | 239 | 242 |

| |  |  |  |
|---|---|---|---|
| | LumiPlus LED lighting | | |
| | **Mini V3 RGB** | **Mini V2 RGB** | **Micro RGB** |
| **More info on page** | 245 | 244 | 244 |

**LumiPlus RGB LED lights are NN compatible when used in the following combinations :**

- **Wired to a Fluidra Connect & Go power center cabinet including LumiPlus RGB LED control (model Complete RGB, codes 70699 & 70700).**
- **Wired to a LumiPlus Modbus device (code 57434) on an existing installation already containing a LumiPlus modulator (code 27818).**
- **Wired to a LumiPlus Modbus device + LumiPlus modulator (code 57435) on a new installation.**

FLUIDRA CONNECT
INTERNET OF POOLS

## FLUIDRA CONNECT ACCESSORIES

THE FUTURE IS HERE

**While providing a convenient and easy to install solution with Connect & Go pre-wired power center cabinets, it is possible to create tailor-made Fluidra Connect automation for custom applications.**

**It can be either Fluidra Connect main components to create a custom installation or expansion modules to add features to a Connect & Go power center cabinet.**

**• Custom installation**

**The following components are needed as a baseline (to be integrated in a specific power center cabinet - not provided):**

**- Connect Box which is the "brain" of Fluidra Connect automation.**

**- One or several GPIO control device(s) that will manage pool equipment.**

**• Expansion modules**

**6 expansion modules are offered to bring additional features to Connect & Go power center cabinets:**

**- 3 modules to add 2 filter pumps control (available for 1, 2 & 3 HP pumps).**

**- 2 modules to add lighting management (available in white or RGB color with 100 VA transformer).**

**- 1 module to get an additional GPIO for pool equipmeent management.**



### Connect Box

Connect Box is the brains behind a Fluidra Connect pool installation. Fluidra Connect does not work without Connect Box, which must have a cable or Wi-Fi Internet connection (from a home router, 3G network, etc.).

| | Code | Standard Pack | Standard Weight in kg | Standard Volume in m³ |
|---|---|---|---|---|
| Connect Box | **66671** | 1 | - | - |

In cases that the products to be controlled are not compatible with Fluidra Connect, they can be run using a device called a GPIO.



### GPIO

Control device with 4 digital inputs and 4 digital outputs.

Using the GPIO, incompatible products, such as a white spotlight or filtration pump, can be switched on or off and their timers set.

It also displays the status of some devices, such as a pool cover.

| | Code | Standard Pack | Standard Weight in kg | Standard Volume in m³ |
|---|---|---|---|---|
| GPIO | **62368** | 1 | - | - |

**Up to 247 GPIOs can be connected to a single Connect Box.**

+ info

Further information at
**www.fluidraconnect.com**

FLUIDRA CONNECT
INTERNET OF POOLS

# FLUIDRA CONNECT ACCESSORIES



## Expansion modules - 2 auxiliary pumps

Those expansion modules allow to add ON-OFF-AUTO control of 2 additional pumps.
Available in 3 versions for 1, 2 or 3 HP pumps (single phase).

| | Code | Standard Pack. | Standard Weight in kg | Standard Volume in $m^3$ |
|---|---|---|---|---|
| Expansion module - 2 pumps 1 HP | **72731** | - | - | - |
| Expansion module - 2 pumps 2 HP | **72732** | - | - | - |
| Expansion module - 2 pumps 3 HP | **72733** | - | - | - |



## Expansion modules - White & RGB lighting

Those expansion modules allow to add Lighting supply and control.
Provided with a 100 VA transformer.
Available in 2 versions: white light and RGB color light (NN compatible)

| | Code | Standard Pack. | Standard Weight in kg | Standard Volume in $m^3$ |
|---|---|---|---|---|
| Expansion module - white light | **70695** | - | - | - |
| Expansion module - RGB color light | **70696** | - | - | - |



## Expansion module - GPIO

This expansion module allows to add a GPIO device that brings 4 digital inputs and 4 digital outputs in addition to existing GPIO in Connect & Go cabinets.
Any standard product can be managed with ON, OFF and schedule controls or device status (such as pool cover for example).

| | Code | Standard Pack. | Standard Weight in kg | Standard Volume in $m^3$ |
|---|---|---|---|---|
| Expansion module - GPIO | **70770** | - | - | - |

FLUIDRA CONNECT

INTERNET OF POOLS

# FLUIDRA CONNECT ACCESSORIES

## Fluidra Connect accessories

| | Code | Standard Pack | Standard Weight in kg | Standard Volume in $m^3$ |
|---|---|---|---|---|
| 230 VAC opto-isolator | **66395** | - | - | - |
| 24 VAC opto-isolator | **66396** | - | - | - |
| Switch - 5 ports | **66390*** | - | - | - |
| Power Line Communications - 2 ports | **66391*** | - | - | - |
| Indoor Wi-Fi access point | **66392*** | - | - | - |
| Outdoor router | **66393*** | - | - | - |
| Portable router | **66394*** | - | - | - |
| 3G router (requires SIM card) | **67297*** | - | - | - |
| 3G router for DIN rail (requires SIM card) | **67298*** | - | - | - |
| SEM1 single-phase meter with transformer | **68441** | - | - | - |
| SEM3 single-phase meter with 3 transformers | **68442** | - | - | - |
| Bridge Modbus TCP/RTU | **68168** | - | - | - |
| Modbus temperature sensor kit | **69682** | - | - | - |

* While stocks last



**66395 - 66396**



**66390**



**66391**



**66392**



**66393**



**66394**



**67297**



**68441-68442**



**68168**







# POOL SURROUND EQUIPMENT


40 • Pool access - Elegance ladders
41 • Pool access - Wall model ladders
42 • Pool access - Standard model ladders
43 • Pool access - Mixed model ladders
44 • Pool access - Asymmetrical and easy access ladders
46 • Pool access - Exit grab rails and lower end
47 • Pool access - Accessories, anchoring fixtures and grips
49 • Diving boards and trampolines
50 • Platforms
50 • Slides
52 • Pluvium showers
53 • Iguazu showers
54 • Showers - Solar showers
56 • Showers - Knob valves
56 • Showers - Showers with timers
57 • Showers - Accessories
58 • Showers - Shower trays
58 • AstralPool Bike
59 • Ornamental water features - Cannons and waterfalls
62 • Grilles for overflow

+ info
Further information on **PRODUCTS**
**www.astralpool.com**

# POOL ACCESS - ELEGANCE LADDERS



Complies with Standard
**EN 16582-1:2015**

## Elegance ladders

GARANTÍA 3 AÑOS YEARS GUARANTEE

These sleek, stylish ladders with handrails have been designed to make it easy to get into a pool. Made of AISI 316 stainless steel with two anchoring points, the first step is double the standard size in a non-slip material for the greater safety and convenience of swimmers. Comes with 3 or 4 steps. 3-year warranty.

| | Code | Standard Pack | Standard Weight in kg | Standard Volume in $m^3$ |
|---|---|---|---|---|
| **Elegance ladders** | | | | |
| 2 steps + 1 safety step | **45782** | 1 | 14 | 0.089 |
| 3 steps + 1 safety step | **45783** | 1 | 15 | 0.089 |

| Code | Steps | A | B |
|---|---|---|---|
| **45782** | **2 + 1 safety** | 960 | 2430 |
| **45783** | **3 + 1 safety** | 1220 | 2690 |

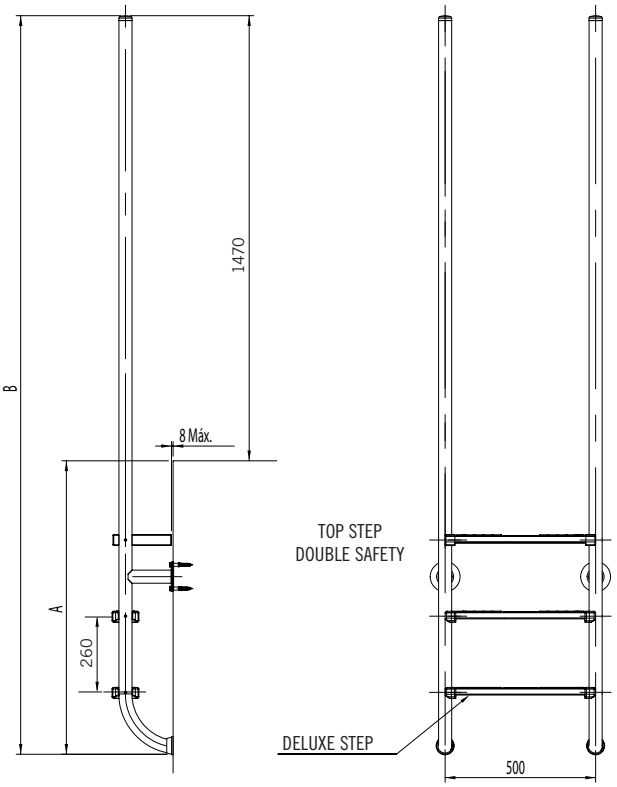

## POOL ACCESS - WALL MODEL LADDERS



Complies with Standard
**EN 16582-1:2015**

In-ground pool ladder. Stainless steel Ø 43 mm pipe handrail. Stainless steel steps. Special non-slip design ensures safety. Supplied with anchoring fixtures for connection to an equipotential outlet. Trimmed faceplate.

| Steps | A | B | C | D | E | F |
|---|---|---|---|---|---|---|
| **2** | 318 | 620 | 260 | 700 | 148 | 500 |
| **3** | 318 | 620 | 260 | 960 | 148 | 500 |
| **4** | 318 | 620 | 260 | 1220 | 148 | 500 |
| **5** | 318 | 620 | 260 | 1480 | 148 | 500 |

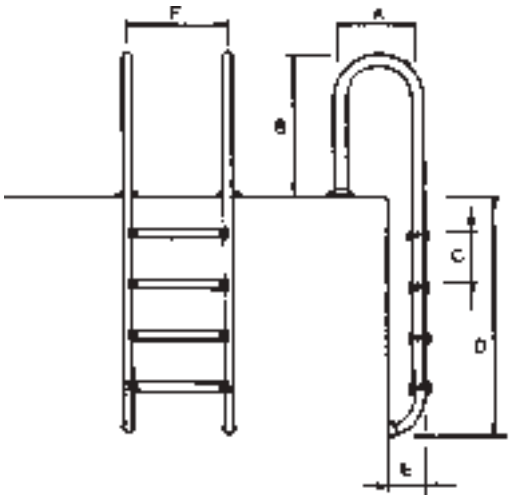


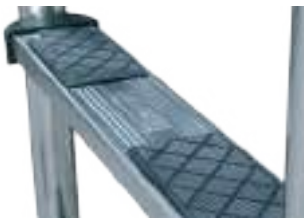

### Wall model ladder with Luxe model steps

Rails & steps in AISI-316.

| | Code | Standard Pack | Standard Weight in kg | Standard Volume in $m^3$ |
|---|---|---|---|---|
| 2 steps ladder | **05480** | 1 | 9.0 | 0.05 |
| 3 steps ladder | **05481** | 1 | 10.5 | 0.06 |
| 4 steps ladder | **05482** | 1 | 12.4 | 0.06 |
| 5 steps ladder | **05483** | 1 | 13.7 | 0.07 |



### Wall model ladder with Standard model steps

Rails & steps in AISI-304.

| | Code | Standard Pack | Standard Weight in kg | Standard Volume in $m^3$ |
|---|---|---|---|---|
| 2 steps ladder | **05492** | 1 | 9.0 | 0.05 |
| 3 steps ladder | **05493** | 1 | 12.7 | 0.06 |
| 4 steps ladder | **05494** | 1 | 14.8 | 0.06 |
| 5 steps ladder | **05495** | 1 | 13.6 | 0.07 |

+ info
Further information on **PRODUCTS**
**www.astralpool.com**

## POOL ACCESS - STANDARD MODEL LADDERS



Complies with Standard
**EN 16582-1:2015**

In-ground pool ladder. Stainless steel Ø 43 mm pipe handrail. Stainless steel steps. Special non-slip design ensures safety. Supplied with anchoring fixtures for connection to an equipotential outlet. Trimmed faceplate.

| Steps | A | B | C | D | E | F |
|---|---|---|---|---|---|---|
| **2** | 618 | 620 | 260 | 700 | 148 | 500 |
| **3** | 618 | 620 | 260 | 960 | 148 | 500 |
| **4** | 618 | 620 | 260 | 1220 | 148 | 500 |
| **5** | 618 | 620 | 260 | 1480 | 148 | 500 |

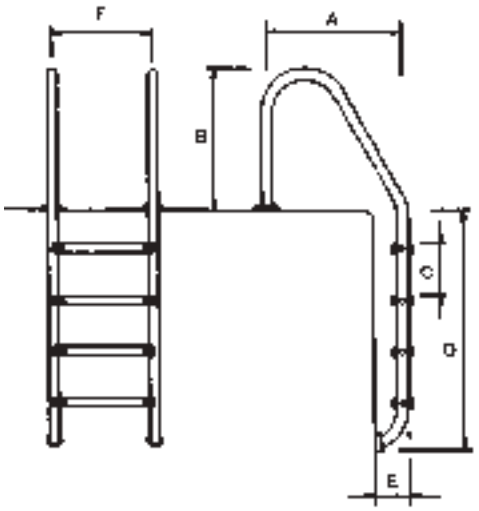


Optional: American measurements without anchor point and optional plastic step.



### Standard handrail ladder with Luxe model step

Rails & steps in AISI-316.

| | Code | Standard Pack | Standard Weight in kg | Standard Volume in $m^3$ |
|---|---|---|---|---|
| 2 steps ladder | **05476** | 1 | 9.8 | 0.07 |
| 3 steps ladder | **05477** | 1 | 11.5 | 0.08 |
| 4 steps ladder | **05478** | 1 | 14.0 | 0.08 |
| 5 steps ladder | **05479** | 1 | 15.0 | 0.10 |



### Standard handrail ladder with Standard model step

Rails & steps in AISI-304.

| | Code | Standard Pack | Standard Weight in kg | Standard Volume in $m^3$ |
|---|---|---|---|---|
| 2 steps ladder | **05488** | 1 | 9.6 | 0.07 |
| 3 steps ladder | **05489** | 1 | 12.0 | 0.08 |
| 4 steps ladder | **05490** | 1 | 15.0 | 0.09 |
| 5 steps ladder | **05491** | 1 | 15.0 | 0.09 |

## POOL ACCESS - MIXED MODEL LADDERS



Complies with Standard
**EN 16582-1:2015**

In-ground pool ladder. Stainless steel Ø 43 mm pipe handrail. Stainless steel steps. Special non-slip design ensures safety. Supplied with anchoring fixtures for connection to an equipotential outlet. Trimmed faceplate.

| Steps | A | B | C | D | E | F | G |
|---|---|---|---|---|---|---|---|
| **2** | 318 | 620 | 260 | 700 | 148 | 500 | 491 |
| **3** | 318 | 620 | 260 | 960 | 148 | 500 | 491 |
| **4** | 318 | 620 | 260 | 1220 | 148 | 500 | 491 |
| **5** | 318 | 620 | 260 | 1480 | 148 | 500 | 491 |

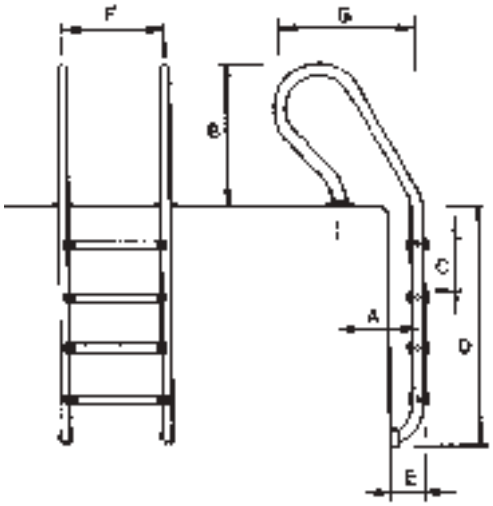




### Mixed handrail ladder with Luxe model step

Rails & steps in AISI-316.

| | Code | Standard Pack | Standard Weight in kg | Standard Volume in $m^3$ |
|---|---|---|---|---|
| 2 steps ladder | **05484** | 1 | 9.7 | 0.07 |
| 3 steps ladder | **05485** | 1 | 11.5 | 0.08 |
| 4 steps ladder | **05486** | 1 | 12.6 | 0.09 |
| 5 steps ladder | **05487** | 1 | 14.8 | 0.09 |



### Mixed handrail ladder with Standard model step

Rails & steps in AISI-304.

| | Code | Standard Pack | Standard Weight in kg | Standard Volume in $m^3$ |
|---|---|---|---|---|
| 2 steps ladder | **05496** | 1 | 9.7 | 0.07 |
| 3 steps ladder | **05497** | 1 | 11.4 | 0.08 |
| 4 steps ladder | **05498** | 1 | 15.3 | 0.09 |
| 5 steps ladder | **05499** | 1 | 14.8 | 0.10 |

+ info
Further information on **PRODUCTS**
**www.astralpool.com**

# POOL ACCESS - ASYMMETRICAL AND EASY ACCESS LADDERS



Complies with Standards
**EN 13451-1**
**EN 13451-2**

## Standard asymmetrical model

Standard model ladder for embedded pools. Handrails in polished Stainless Steel (Ø 43 mm) pipe. Stainless steel steps with non-slip surface. Its careful design helps to reduce the danger of slips or cuts. Complete with anchoring fixtures and earthing connection. Rails & steps in AISI-316.

| | Code | Standard Pack | Standard Weight in kg | Standard Volume in m³ |
|---|---|---|---|---|
| 1 "Luxe" step + 1 double safety step | **19938** | 1 | 13.0 | 0.07 |
| 2 "Luxe" steps + 1 double safety step | **19939** | 1 | 13.9 | 0.08 |
| 3 "Luxe" steps + 1 double safety step | **19940** | 1 | 15.8 | 0.10 |
| 4 "Luxe" steps + 1 double safety step | **19941** | 1 | 17.0 | 0.10 |

| Code | Steps | A | B |
|---|---|---|---|
| **19938** | 2 | 1450 | 700 |
| **19939** | 3 | 1710 | 960 |
| **19940** | 4 | 1970 | 1220 |
| **19941** | 5 | 2230 | 1480 |

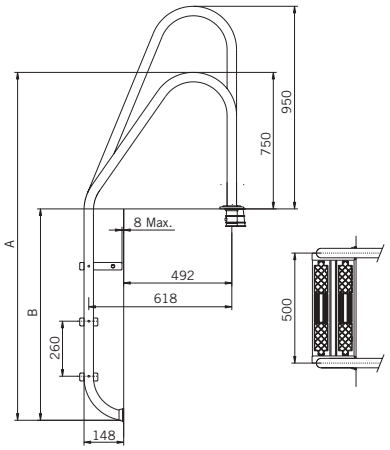




Complies with Standards
**EN 13451-1**
**EN 13451-2**

## Mixed asymmetric model

Stairs with Mixed model handrails, for embedded pools, made of polished Stainless Steel (Ø 43 mm) pipe. Its careful design helps to reduce the danger of slips or cuts. Complete with anchoring fixtures and earthing connection. LUXE handrails and steps in AISI-316.

| | Code | Standard Pack | Standard Weight in kg | Standard Volume in m³ |
|---|---|---|---|---|
| 2 "Luxe" steps + 1 double safety step | **19943** | 1 | 14.0 | 0.08 |
| 3 "Luxe" steps + 1 double safety step | **19944** | 1 | 15.6 | 0.09 |
| 4 "Luxe" steps + 1 double safety step | **19945** | 1 | 17.5 | 0.10 |

| Code | Steps | A | B |
|---|---|---|---|
| **19943** | 3 | 1710 | 960 |
| **19944** | 4 | 1970 | 1220 |
| **19945** | 5 | 2230 | 1480 |

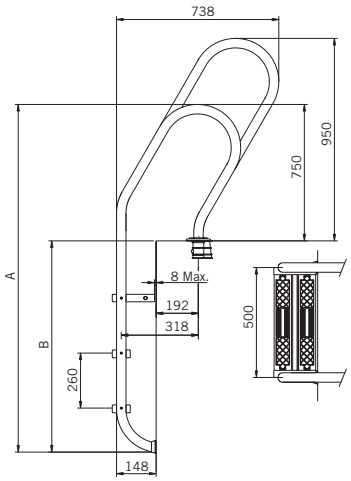

## POOL ACCESS - ASYMMETRICAL AND EASY ACCESS LADDERS



### Easy access model

Ladder width of 500 mm. Handrails in polished stainless steel (Ø 43 mm) pipe. With anchoring fixtures and earthing connection. Polished finish. With anchoring fixtures for earth connection. Rails and non-slip steps in polished AISI-316.

| | Code | Pack. Standard | Weight kg Standard | Volume in m³ Standard |
|---|---|---|---|---|
| 3-step ladder | **07782** | 1 | 21.6 | 0.145 |
| 4-step ladder | **11979** | 1 | 25.9 | 0.202 |

| Code | Steps | A | B | C | D | E | F |
|---|---|---|---|---|---|---|---|
| **07782** | 3 | 1835 | 750 | 260 | 243 | 490 | 500 |
| **11979** | 4 | 2085 | 750 | 260 | 243 | 490 | 500 |

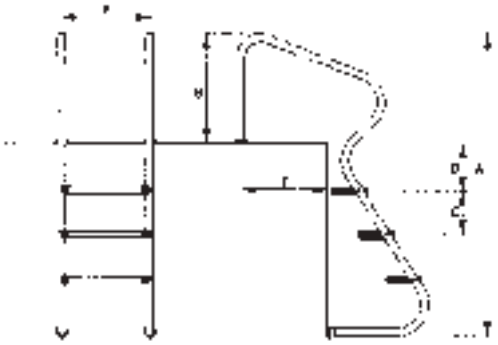



### Above-ground pool safety ladder with platform

Ladder manufactured in AISI-304 stainless steel Ø43 pipe with a bright satin finish and plastic treads. White steps and plastic platform. Non-slip steps and platform. Safe pool access. Ladder maximum load: 150 kg.

| | Code | Standard Pack | Standard Weight in kg | Standard Volume in m³ |
|---|---|---|---|---|
| **For above-ground pool height** | | | | |
| 1 m | **67656** | 1 | - | - |
| 1.20 or 1.35 m | **67657** | 1 | - | - |
| 1,50 m | **67658** | 1 | - | - |

Complies with Standard
**EN 16582-1:2015**

| Code | Steps | A | B | C | D | E | F | G | H | I | J | K |
|---|---|---|---|---|---|---|---|---|---|---|---|---|
| **67656** | 3 | 1856 | 1204 | 400 | 317 | 1000 | 400 | 317 | 1433 | 344 | 506 | 797 |
| **67657** | 4 | 2094 | 1442 | 350 | 285 | 1350 | 350 | 285 | 1644 | 344 | 506 | 808 |
| **67658** | 5 | 2378 | 1727 | 350 | 285 | 1500 | 350 | 285 | 1899 | 344 | 506 | 805 |

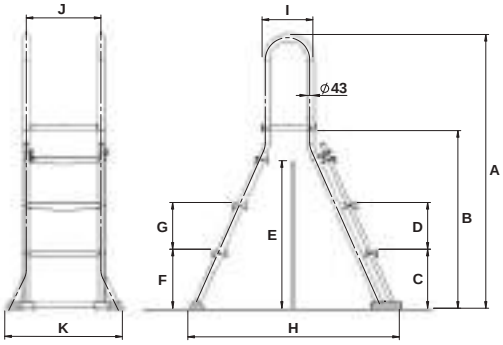

+ info PDB
Further information on **PRODUCTS**
**www.astralpool.com**

## POOL ACCESS - EXIT GRAB RAILS AND LOWER END



### 800 x 800 mm model

Set of 2 tubular handrails in polished S.S. AISI-316 Ø 43 mm pipe. Exit grab rails with fixing plates are supplied as a pair including fixing plates, gaskets, screws and wall plugs.

| | Code | Standard Pack | Standard Weight in kg | Standard Volume in $m^3$ |
|---|---|---|---|---|
| Attachment by means of fixing plate | **05541** | 1 | 9.27 | 0.10 |
| Attachment for embedding | **05540** | 1 | 8.40 | 0.10 |



### 470 x 800 mm model

Set of 2 tubular handrails in polished S.S. AISI-316 Ø 43 mm pipe. Exit grab rails with fixing plates are supplied as a pair including fixing plates, gaskets, screws and wall plugs.

| | Code | Standard Pack | Standard Weight in kg | Standard Volume in $m^3$ |
|---|---|---|---|---|
| Attachment by means of fixing plate | **05542** | 1 | 6.97 | 0.08 |



### 470 x 800 mm model with rectangular base plate

Set of 2 tubular handrails in polished S.S. AISI-316 Ø 43 mm pipe. The exit grab rails with base plates are supplied with screws and wall plugs.

| | Code | Standard Pack | Standard Weight in kg | Standard Volume in $m^3$ |
|---|---|---|---|---|
| Attachment by means of fixing plate | **05543** | 1 | 7.6 | 0.08 |



### Crossover model with rectangular base plate

Set of 2 tubular handrails in polished S.S. AISI-316 Ø 43 mm pipe. The exit grab rails with base plates are supplied with wall plugs and screws.

| | Code | Standard Pack | Standard Weight in kg | Standard Volume in $m^3$ |
|---|---|---|---|---|
| Attachment by means of fixing plate | **05544** | 1 | 8.46 | 0.18 |



### Parallel model

Set of 2 x AISI-316 bright satin stainless steel Ø 43 mm pipe handrails. For fastening with anchoring fixtures code 00143 (not included in supply, (see page 48).

| | Code | Standard Pack | Standard Weight in kg | Standard Volume in $m^3$ |
|---|---|---|---|---|
| Parallel model | **00110** | 1 | 10.0 | 0.11 |



### Asymmetrical model

Set of 2 tubular handrails in polished S.S. AISI-316 Ø 43 mm pipe. For fixing with anchoring fixture code 00143 (not included).

| | Code | Standard Pack | Standard Weight in kg | Standard Volume in $m^3$ |
|---|---|---|---|---|
| Asymmetrical model | **00111** | 1 | 10.1 | 0.14 |

**Ladders and grab rails made to measure**
Any types of ladders, grab rails and handrails can be made to order out of AISI-304 and AISI-316 stainless steel adapted to your needs.

## POOL ACCESS - EXIT GRAB RAILS AND LOWER END



Complies with Standard
**EN 16582-1:2015**

### Split ladder - Bottom half

Rails and steps in polished AISI-316 stainless steel (Ø 43 mm). Attachment with fixing plates, gaskets, screws and wall plugs..

| | Code | Standard Pack | Standard Weight in kg | Standard Volume in m³ |
|---|---|---|---|---|
| 2 "Luxe" steps | **01456** | 1 | 5.0 | 0.04 |
| 3 "Luxe" steps | **01457** | 1 | 6.3 | 0.04 |
| 4 "Luxe" steps | **01458** | 1 | 7.7 | 0.05 |
| 5 "Luxe" steps | **01459** | 1 | 9.2 | 0.07 |



Complies with Standard
**EN 13451-1**
**EN 13451-2**

### Grab rail fixed out of the water

In polished AISI-316 stainless steel (Ø 43 mm).

| | Code | Standard Pack | Standard Weight in kg | Standard Volume in m³ |
|---|---|---|---|---|
| For embedding | **07780** | 1 | 6.7 | 0.118 |
| With base plates (gaskets, wall plugs and screws) | **07781** | 1 | 6.7 | 0.118 |

## POOL ACCESS - ACCESSORIES, ANCHORING FIXTURES AND GRIPS



### Double non-slip safety step

AISI-316 stainless steel with bright satin finish. For all in-ground pool ladder models.

| | Code | Standard Pack | Standard Weight in kg | Standard Volume in m³ |
|---|---|---|---|---|
| Safety step | **70662** | 1 | 2.05 | 0.003 |



### Anchoring sockets

In plastic, with connection to an equipotential circuit.

| | Code | Standard Pack | Standard Weight in kg | Standard Volume in m³ |
|---|---|---|---|---|
| For Ø 43 mm pipe. | **00042** | 50 | 7.0 | 0.03 |
| For Ø 48 mm pipe. | **07661** | - | - | - |



**00043** **08727**

### Articulated anchoring sockets

In polished Stainless Steel (AISI-304) for a ladder with a Ø 43 mm pipe.

| | Code | Standard Pack | Standard Weight in kg | Standard Volume in m³ |
|---|---|---|---|---|
| Articulated anchoring socket without base plate | **00043** | 1 | 0.93 | 0.002 |
| Articulated anchoring socket with base plate | **08727** | 1 | 1.0 | 0.002 |

+ info
PDB
Further information on **PRODUCTS**
**www.astralpool.com**

# POOL ACCESS - ACCESSORIES, ANCHORING FIXTURES AND GRIPS



## Removable anchoring socket with base plate

In polished stainless steel (AISI-316) for a Ø 43 mm pipe with gaskets, wall plugs and screws.

| | Code | Standard Pack | Standard Weight in kg | Standard Volume in m³ |
|---|---|---|---|---|
| Set of 2 units | **07331** | 1 | 1.00 | 0.003 |



## Anchor with locking bolts

Made of polished AISI-316 stainless steel. For a Ø 43 mm pipe.

| | Code | Standard Pack | Standard Weight in kg | Standard Volume in m³ |
|---|---|---|---|---|
| Anchoring sockets | **00143** | 2 | 1.2 | 0.003 |



## Ladder foot pad

Made of plastic, the angle can be adjusted by rotating the eye ball socket. Recommended for liner pools.

| | Code | Standard Pack | Standard Weight in kg | Standard Volume in m³ |
|---|---|---|---|---|
| For Ø 43 mm pipe. | **00045** | 50 | 12.6 | 0.03 |
| For Ø 28 mm pipes. | **00046** | 50 | 14.0 | 0.03 |



## Stainless Steel Handrails

Polished Ø 43 mm AISI-316 stainless steel pipes. With fixing plates (including gaskets, screws and wall plugs).

| | Code | Standard Pack | Standard Weight in kg | Standard Volume in m³ |
|---|---|---|---|---|
| Length 0.5 m | **00051** | 2 | 2.8 | 0.02 |
| Length 1 m | **00052** | 2 | 4.3 | 0.04 |
| Length 2 m | **00053** | 2 | 7.9 | 0.09 |
| Length 2.5 m | **00054** | 2 | 9.5 | 0.11 |



## Tee bar

Polished Ø 43 mm AISI-316 stainless steel pipes.

| | Code | Standard Pack | Standard Weight in kg | Standard Volume in m³ |
|---|---|---|---|---|
| **With fixing plates** (including gaskets, screws and wall plugs). | 00056 | 1 | 2.09 | 0.01 |

## DIVING BOARDS AND TRAMPOLINES



### Dynamic flexible springboard

Wide springboard made of polyester resin and fibreglass. Resistant to UV exposure and adverse weather conditions. Non-slip surface covering the entire board. Supplied with anchoring fixtures.

| | Code | Standard Pack | Standard Weight in kg | Standard Volume in $m^3$ |
|---|---|---|---|---|
| Length 1.61 m. Width 0.46 m | **21392** | 1 | 22.0 | 0.335 |



### Dynamic 1200 Diving Board

Wide springboard made of polyester resin and fibreglass. Resistant to UV exposure and adverse weather conditions. Non-slip surface covering the entire board. Supplied with anchoring fixtures.

| | Code | Standard Pack | Standard Weight in kg | Standard Volume in $m^3$ |
|---|---|---|---|---|
| Length 1.20 m. Width 0.40 m | **20090** | 1 | 20.0 | 0.325 |



### Dynamic Diving Board

Wide springboard made of polyester resin and fibreglass, with non-slip surface. Grab rails and supports made of stainless steel with matt finish. Supplied with anchoring fixtures.

| | Code | Standard Pack | Standard Weight in kg | Standard Volume in $m^3$ |
|---|---|---|---|---|
| Length 2 m, Width 0.60 m | **23199** | 1 | 50.0 | 1.585 |
| Length 2.30 m, Width 0.60 m | **23200** | 1 | 52.0 | 1.585 |

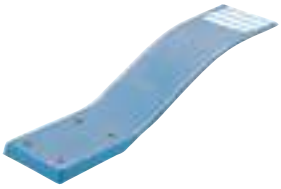

### Dolphin Model

Flexible Polyester and fibreglass springboard in light blue. Supplied with anchoring fixtures.

| | Code | Standard Pack | Standard Weight in kg | Standard Volume in $m^3$ |
|---|---|---|---|---|
| Length 1.6 m. Height 0.35 m | **00076** | 1 | 22.0 | 0.138 |

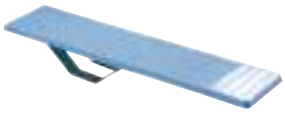

### Ballesta Model

Light blue Polyester and fibreglass springboard. Springboard bracket made of galvanized Steel. Supplied with anchoring fixtures.

| | Code | Standard Pack | Standard Weight in kg | Standard Volume in $m^3$ |
|---|---|---|---|---|
| Length 1.8 m, Height 0.25 m, Width 0.4 m | **00077** | 1 | 27.0 | 0.084 |
| Length 1.4 m, Height 0.25 m, Width 0.4 m | **00078** | 1 | 25.0 | 0.072 |



### Elevated Model

Base laminated in ivory-coloured Polyester and fibreglass, with light blue board. With 2 stainless steel handrails. Non-slip step and board. Supplied with anchoring fixtures.

| | Code | Standard Pack | Standard Weight in kg | Standard Volume in $m^3$ |
|---|---|---|---|---|
| Length 2 m Height 0.55 m Width 0.4 m | **00068** | 1 | 38.0 | 0.850 |
| Length 2.5 m Height 0.75 m Width 0.46 m | **00069** | 1 | 68.0 | 1.380 |

+ info PDB
Further information on **PRODUCTS**
**www.astralpool.com**

# PLATFORMS

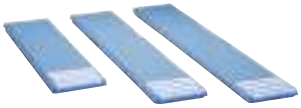

## Platform

Light blue polyester and fibreglass boards with non-slip surface. Anchoring fixtures are not supplied.

| | Code | Standard Pack | Standard Weight in kg | Standard Volume in $m^3$ |
|---|---|---|---|---|
| **Width 0.40 m** | | | | |
| Length 1.4 m | **00060** | 1 | 13.0 | 0.036 |
| Length 1.8 m | **00061** | 1 | 16.0 | 0.046 |
| Length 2.0 m | **00062** | 1 | 18.0 | 0.050 |
| Length 2.3 m | **00063** | 1 | 22.0 | 0.060 |
| **Width 0.46 m** | | | | |
| Length 2.5 m | **00064** | 1 | 31.0 | 0.080 |
| Length 3.2 m | **00065** | 1 | 46.0 | 0.100 |



## Diving board brackets

Made of polished AISI-304 stainless steel, with platform fixing bolts.

| | Code | Standard Pack | Standard Weight in kg | Standard Volume in $m^3$ |
|---|---|---|---|---|
| For boards up to 2.30 m in length | **14586** | 1 | 8.0 | 0.040 |
| For boards from 2.5 to 3.2 m in length | **72594** | 1 | 8.4 | 0.102 |

# SLIDES



## Pranaslide Model

Light blue polyester and fibreglass steps and slide. Grab rails made of white painted Aluminium. Fitted with a water supply connection to ease sliding. Supplied with anchoring fixtures.

| | Code | Standard Pack | Standard Weight in kg | Standard Volume in $m^3$ |
|---|---|---|---|---|
| Height 1.50 m | **00085** | 1 | 62.0 | 1.214 |
| Height 1.80 m | **00086** | 1 | 70.0 | 1.368 |



## Curved model

Light blue polyester and fibreglass steps and slide. Grab rails made of white painted Aluminium. Fitted with a water supply connection to ease sliding. Supplied with anchoring fixtures.

| | Code | Standard Pack | Standard Weight in kg | Standard Volume in $m^3$ |
|---|---|---|---|---|
| Right curve, height 1.78 m | **00088** | 1 | 83.0 | 2.913 |
| Left curve, height 1.78 m | **00089** | 1 | 83.0 | 2.913 |

# SLIDES



## Straight model

Light blue polyester and fibreglass slide. Plastic steps. Polished stainless steel handrails. Fitted with a water supply connection to ease sliding. Supplied with anchoring fixtures.

| | Code | Standard Pack | Standard Weight in kg | Standard Volume in $m^3$ |
|---|---|---|---|---|
| Height 1.30 m | **00081** | 1 | 31.0 | 0.550 |
| Height 1.80 m | **00082** | 1 | 38.0 | 0.850 |
| Height 2.00 m | **00083** | 1 | 44.0 | 0.750 |



## Slides

Slide made of polyester, reinforced with fibreglass. Plastic steps. Stainless steel handrails. Fitted with a water supply connection to ease sliding. Supplied with anchoring fixtures. Available in white, blue and ivory.

| | Code | Standard Pack | Standard Weight in kg | Standard Volume in $m^3$ |
|---|---|---|---|---|
| Straight | **18543 MT07** | 1 | - | 6.48 |
| Left curve | **18545 MT07** | 1 | - | 8.30 |



## Typhoon Model

Rotomolded slides with “easy grab” handrails and an enclosed non-slip ladder to ensure safe use. They are compatible with Salt Chlorination systems as indicated by the "Salt Pool Approved" label. Fitted with a water supply connection to ease sliding. Height 2.10 metres. Colour available: Sandstone.

| | Code | Standard Pack | Standard Weight in kg | Standard Volume in $m^3$ |
|---|---|---|---|---|
| Typhoon Model | **52253** | 1 | 61 | - |

Available colours:





## Cyclone Model

Rotomolded slides with “easy grab” handrails and an enclosed non-slip ladder to ensure safe use. They are compatible with Salt Chlorination systems as indicated by the "Salt Pool Approved" label. Fitted with a water supply connection to ease sliding. Height 2.10 metres. Colour available: Sandstone.

| | Code | Standard Pack | Standard Weight in kg | Standard Volume in $m^3$ |
|---|---|---|---|---|
| Cyclone Model | **52254** | 1 | 115 | - |

Available colours:



+ info
Further information on **PRODUCTS**
**www.astralpool.com**

# PLUVIUM SHOWERS



## Pluvium shower

Shower made of tropical wood combined with glossy AISI-316 stainless steel. Mixer valve for hot and cold water control. Adjustable shower head with anti-limescale system. Its minimalist and compact design provides an elegant and modern image for the pool environment and its high quality materials give it a long service life and greater resistance to weathering and corrosion.
Height of the shower head from the ground: 2.04 m.

| | Code | Standard Pack | Standard Weight in kg | Standard Volume in $m^3$ |
|---|---|---|---|---|
| Pluvium Shower with shower tray | **43583** | 1 | 38 | 0.169 |
| Pluvium Shower without shower tray | **43432** | 1 | 27 | 0.136 |



**SHOWERHEAD**



**MIXER TAP**



## Pluvium solar shower

Solar shower made of tropical wood combined with glossy AISI-316 stainless steel. It includes a 30 L aluminium tank. Mixer valve for hot and cold water control. Adjustable shower head with anti-limescale system. Its minimalist and compact design provides an elegant and modern image for the pool environment and its high quality materials give it a long service life and greater resistance to weathering and corrosion. Height of the shower head from the ground: 2.04 m.

| | Code | Standard Pack | Standard Weight in kg | Standard Volume in $m^3$ |
|---|---|---|---|---|
| Pluvium Solar Shower without shower tray | **43435** | 1 | 37 | 0.225 |



## Shower tray for Pluvium shower

Shower tray for the Pluvium shower made of a combination of wood and glossy AISI-316 stainless steel. Its minimalist and compact design provides an elegant and modern image for the pool environment.

| | Code | Standard Pack | Standard Weight in kg | Standard Volume in $m^3$ |
|---|---|---|---|---|
| Shower tray for Pluvium shower | **43434** | 1 | 11 | 0.028 |

## IGUAZU SHOWERS



### Iguazu Shower

Matt AISI-316 stainless steel shower for hot and cold water with a white acrylic front panel. Adjustable chromed brass anti-limescale shower-head and 2 mist spray jets controlled by a 2-way control valve. The flow rate and the water temperature are regulated by a mixer valve.

| | Code | Standard Pack | Standard Weight in kg | Standard Volume in $m^3$ |
|---|---|---|---|---|
| Iguazu Shower | **53874** | 1 | 27 | 0.163 |



**SHOWERHEAD**



**MIXER TAP**



**BODY JETS**



### Iguazu Solar Shower

Matt AISI-316 stainless steel solar shower with a white acrylic front panel. Adjustable chromed brass anti-limescale shower-head and 2 mist spray jets controlled by a 2-way control valve. With a cold water inlet, it enables the water to be heated by means of a 30 litre aluminium accumulator tank, taking advantage of the sun's energy.

| | Code | Standard Pack | Standard Weight in kg | Standard Volume in $m^3$ |
|---|---|---|---|---|
| Iguazu Solar Shower | **56933** | 1 | 32 | 0.163 |



**SHOWERHEAD**



**MIXER TAP**



**BODY JETS**

+ info
Further information on **PRODUCTS**
**www.astralpool.com**

# SHOWERS - SOLAR SHOWERS

What are the advantages of solar showers?
- user comfort
- energy saving
- easy to install



## Niagara Solar Shower

Shower made of polished AISI-304 stainless steel. With a single cold water inlet, it enables the water to be heated by means of a 30 L aluminium accumulator tank, taking advantage of the sun's energy. It has a mixer valve and a square adjustable anti-limescale shower head.

| | Code | Standard Pack | Standard Weight in kg | Standard Volume in $m^3$ |
|---|---|---|---|---|
| Niagara Solar Shower | **53873** | 1 | 25 | 0.26 |



**SHOWERHEAD**



**MIXER TAP**



## Angel Solar Shower

Grey aluminium shower. With a cold water inlet, it enables the water to be heated by means of a 30 litre aluminium accumulator tank, taking advantage of the sun's energy. It has a mixer valve and an anti-limescale shower head.

| | Code | Standard Pack | Standard Weight in kg | Standard Volume in $m^3$ |
|---|---|---|---|---|
| Angel Solar Shower | **56932** | 1 | 13 | 0.152 |



**SHOWERHEAD**



**MIXER TAP**



## ECO solar shower with 30 litre tank

Shower made of polished AISI-304 stainless steel that, with a single cold water inlet, enables the water to be heated by means of a 30-litre aluminium accumulator tank, taking advantage of the sun's energy. Adjustable massaging shower head with 3 functions and an anti-limescale membrane. With a (hot/cold) mixing valve. Water drain plug. Quick connection of water inlet. Attaches to the ground by means of anchoring screws and wall plugs.

| | Code | Standard Pack | Standard Weight in kg | Standard Volume in $m^3$ |
|---|---|---|---|---|
| Height (shower head to ground): 2 m | **36848** | 1 | 12.0 | 0.16 |



**SHOWERHEAD**



**MIXER TAP**

## SHOWERS - KNOB VALVES



### Niagara Shower

Shower made of polished AISI-304 stainless steel with a square adjustable shower head and a flow-regulating valve.

| | Code | Standard Pack | Standard Weight in kg | Standard Volume in $m^3$ |
|---|---|---|---|---|
| Niagara Shower | **53872** | 1 | 22 | 0.125 |



**SHOWERHEAD**



**KNOB**



**RECOMMENDED**

**Stainless steel polish/cleaner** See p.204



### Angel shower with footwash

AISI-304 polished stainless steel (Ø 43 mm) shower with 1 chrome anti-limescale showerhead and 1 flow opening valve. Includes footwash tap. With 00107 anchoring fixture incorporated (see page 57).

| | Code | Standard Pack | Standard Weight in kg | Standard Volume in $m^3$ |
|---|---|---|---|---|
| Angel footwash | **52718** | 1 | 5.6 | 0.43 |

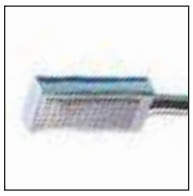

**SHOWERHEAD**



**KNOB**



**FOOTWASH TAP**



### Angel

AISI-304 polished stainless steel (Ø 43 mm) shower with 1 chrome anti-limescale showerhead and 1 flow opening valve. With 00107 anchoring fixture incorporated (see page 57).

| | Code | Standard Pack | Standard Weight in kg | Standard Volume in $m^3$ |
|---|---|---|---|---|
| Angel Shower | **52717** | 1 | 5.6 | 0.43 |

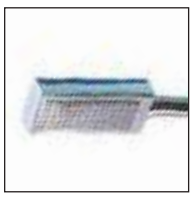

**SHOWERHEAD**



**KNOB**

+ info PDB
Further information on **PRODUCTS**
**www.astralpool.com**

## SHOWERS - KNOB VALVES



### Angel Shower with 2 shower heads

AISI-304 polished stainless steel (Ø 63 mm) shower with 2 chrome anti-limescale showerheads and 2 flow opening valves. With 27333 anchoring fixture incorporated (see page 57).

| | Code | Standard Pack | Standard Weight in kg | Standard Volume in $m^3$ |
|---|---|---|---|---|
| Angel Shower with 2 shower heads | **59775** | 1 | 9.58 | 0.054 |



**SHOWERHEAD**



**KNOB**

## SHOWERS - SHOWERS WITH TIMERS

AISI-304 polished stainless steel shower, specially designed for high footfall facilities (public or semi-public pools). AstralPool showers for public facilities are characterised by their highly resistant materials, considered vandal-proof, and the water savings made thanks to their built-in flow limiters. Showerhead height from floor: 2 m. Fastened to floor with screws, with anchoring fixture incorporated.



### Shower with timer and 1 shower head

Not designed for installation on a shower tray.

| | Code | Standard Pack | Standard Weight in kg | Standard Volume in $m^3$ |
|---|---|---|---|---|
| Shower with timer and 1 shower head | **59776** | 1 | 7.2 | 0.044 |



**SHOWERHEAD**



**TIMER SWITCH**

The new range of timer showers has replaced the showers with code numbers **00095, 00097, 08728, 15841, 19947.**

## SHOWERS - SHOWERS WITH TIMERS

### Shower with timer, 1 shower head and footwash



| | Code | Standard Pack | Standard Weight in kg | Standard Volume in $m^3$ |
|---|---|---|---|---|
| Shower with timer, 1 shower head and footwash | **59777** | 1 | 7.5 | 0.044 |



**SHOWERHEAD**



**TIMER SWITCHES**



**FOOTWASH TAP**

### Shower with timer and 2 shower heads



| | Code | Standard Pack | Standard Weight in kg | Standard Volume in $m^3$ |
|---|---|---|---|---|
| Shower with timer and 2 shower heads | **59778** | 1 | 7.5 | 0.044 |



**SHOWERHEADS**



**TIMER SWITCHES**

## SHOWERS - ACCESSORIES

### Shower anchoring fixtures



Made of plastic, with a locking system for shower disassembly and bonded connection.

| | Code | Standard Pack | Standard Weight in kg | Standard Volume in $m^3$ |
|---|---|---|---|---|
| **Shower anchoring Ø 43 mm**<br>For models: 52717 and 52718 | **00107** | 1 | 0.48 | 0.003 |
| **Shower anchoring Ø 63 mm**<br>For model: 59775 | **27333** | 1 | 1.0 | 0.003 |

+ info PDB
Further information on **PRODUCTS**
**www.astralpool.com**

## SHOWERS - SHOWER TRAYS



### Relax model shower tray

Dimensions 80 cm x 90 cm. Large stainless steel shower tray positioned away from the standing area. Non-slip surface. Made of polyester + fibreglass. Gelcoat Finish.

| | Code | Standard Pack | Standard Weight in kg | Standard Volume in $m^3$ |
|---|---|---|---|---|
| With Ø 43 mm anchoring fixture for Angel showers 52717 and 52718 (page 55). | **20066** | 1 | 9.0 | 0.16 |

**Also available with D.63 anchoring (20067) and without anchoring (20073).**



### Classic model shower tray

Dimensions 100 cm x 80 cm. Large stainless steel shower tray. Non-slip surface. Made of polyester + fibreglass. Gelcoat Finish.

| | Code | Standard Pack | Standard Weight in kg | Standard Volume in $m^3$ |
|---|---|---|---|---|
| With Ø 43 mm anchoring fixture for Angel showers 52717 and 52718 (page 55) | **19723** | 1 | 10.0 | 0.16 |

**Also available with D.63 anchoring (19724) and without anchoring (19725).**



### Shower tray

Dimensions 80 cm x 80 cm, with adjustable main drain. Ø 130 mm grille, Ø 50 mm connection. Made of polyester + fibreglass.

| | Code | Standard Pack | Standard Weight in kg | Standard Volume in $m^3$ |
|---|---|---|---|---|
| With Ø 43 mm anchoring fixture for Angel showers 52717 and 52718 (page 55). | **00103** | 1 | 11.0 | 0.16 |

**Available with D.63 anchoring (code 00104).**

## ASTRALPOOL BIKE



### AstralPool Bike

Aquabike made of square and rectangular polished AISI-316 stainless steel pipe. Ideal for gyms, wellness centres, spas, medical facilities, hotels and private pools.

- Adjustable height of saddle and handlebar.
- For use in public and residential pools from 1 to 1.5 metres in depth.
- Ergonomic.
- Pedals made of PUR.
- Easy to move about.

| | Code | Standard Pack | Standard Weight in kg | Standard Volume in $m^3$ |
|---|---|---|---|---|
| AstralPool Bike | **67333** | 1 | 20 | 0.12 |

# ORNAMENTAL WATER FEATURES - CANNONS AND WATERFALLS



## Pluvium water features and ornaments

The water features in the AstralPool Signature range add a touch of elegance and design to any pool, not to mention their main purpose: increasing swimmers' feeling of wellbeing. We are proud to present the PLUVIUM cannon and waterfall. They combine wood and satin finish AISI 316 stainless steel. These products match others AstralPool Signature Pluvium shower range. 3-year warranty.

| | Code | Standard Pack | Standard Weight in kg | Standard Volume in $m^3$ |
|---|---|---|---|---|
| Pluvium cannon, 7 $m^3$/h, 5 mca. | **45868** | 1 | 11 | 0.089 |
| Pluvium waterfall, 12 $m^3$/h, 2 mca. | **45869** | 1 | 31 | 0.284 |



The following fastening systems are recommended:

| | Code | Standard Pack | Standard Weight in kg | Standard Volume in $m^3$ |
|---|---|---|---|---|
| Pluvium cannon anchoring | **45872** | 1 | 2 | 0.005 |
| Pluvium waterfall anchoring | **45873** | 1 | 3.5 | 0.015 |

**NOTE: The water features do NOT include anchoring, a pump, control panel or suction system.**



**RECOMMENDED**

**Pluvium shower** See p.52



## A-350 and A-500 residential water curtains

- Range of ornamental fountains to enhance pool design.
- Made of AISI-304 and AISI-316 stainless steel.
- Polished finish.
- Fastened to the ground with screws and anchor studs.
- 1½" ext. R. connection.

| | Code | Standard Pack | Standard Weight in kg | Standard Volume in $m^3$ |
|---|---|---|---|---|
| A-350 AISI-316 residential water curtain | **65104** | 1 | 10 | - |
| A-500 AISI-316 residential water curtain | **65105** | 1 | 13 | - |
| A-350 AISI-304 residential water curtain | **65106** | 1 | 10 | - |
| A-500 AISI-304 residential water curtain | **65107** | 1 | 13 | - |

**NOTE: The water features do not include a pump, control box or suction pipes.**

NOTE: The water features do not include a pump, control box or suction pipes.

## ORNAMENTAL WATER FEATURES - CANNONS AND WATERFALLS

Range of cascades for residential pools made of AISI-316 stainless steel. The range is made up of three cascades in an outstanding modern design. Polished + matt finish.
All models come with anchoring. A ½ HP pump is recommended.



### Classic water curtain

| | Code | Standard Pack | Standard Weight in kg | Standard Volume in m³ |
|---|---|---|---|---|
| Classic water curtain | **57095** | 1 | 28 | 0.38 |



### Straight water curtain

| | Code | Standard Pack | Standard Weight in kg | Standard Volume in m³ |
|---|---|---|---|---|
| Straight water curtain | **57096** | 1 | 36 | 0.25 |



### One water curtain

| | Code | Standard Pack | Standard Weight in kg | Standard Volume in m³ |
|---|---|---|---|---|
| One water curtain | **57097** | 1 | 36 | 0.25 |



RECOMMENDED

**Victoria Plus Silent pump** See p.151



### Residential water curtain

Residential water curtain in polished stainless steel. Fastened to the ground with screws and anchor studs.

| | Code | Standard Pack | Standard Weight in kg | Standard Volume in m³ |
|---|---|---|---|---|
| A-350 AISI-316 stainless steel, 12 m³/h 2 mca | **52244** | 1 | 10 | 0.12 |
| A-500 AISI-316 stainless steel, 18 m³/h 2 mca | **52245** | 1 | 15 | 0.24 |

| Code | Suction concrete | Variable speed | Control box | *Optional Push button + Switch |
|---|---|---|---|---|
| **52244** | 00302 x 2 | 65560 | 25719 | 04047 + 04050 |
| **52245** | 00302 x 2 | 65562 | 25719 | 04047 + 04050 |

* See page 381.

** Optional: components for turning the waterfall on from the pool.

NOTE: The water features do not include a pump, control box or suction pipes.

# ORNAMENTAL WATER FEATURES - CANNONS AND WATERFALLS

## Residential water cannon

Residential water cannon in polished stainless steel. Fastened to the ground with screws and anchor studs.



52242

52243

| | Code | Standard Pack | Standard Weight in kg | Standard Volume in m³ |
|---|---|---|---|---|
| **AISI-316 stainless steel** | | | | |
| Round opening. 5 m³/h, 2 mca | **52242** | 1 | 3 | 0.12 |
| Flat opening. 15 m³/h, 2 mca | **52243** | 1 | 5 | 0.13 |
| **AISI-304 stainless steel** | | | | |
| Round opening. 5 m³/h, 2 mca | **52238** | 1 | 3 | 0.12 |
| Flat opening. 15 m³/h, 2 mca | **52239** | 1 | 5 | 0.13 |

| Code | Suction concrete | Pump | Control box | *Optional Push button + Switch |
|---|---|---|---|---|
| **52242** | 00302 | 65557 | 25718 | 04047 + 04050 |
| **52243** | 00302 x 2 | 65566 | 25719 | 04047 + 04050 |
| **52238** | 00302 | 65557 | 25718 | 04047 + 04050 |
| **52239** | 00302 x 2 | 65560 | 25719 | 04047 + 04050 |

*Optional: components for turning the cannon on from the pool.

## Ornamental waterfalls



In AISI-316 stainless steel.

| | Code | Standard Pack | Standard Weight in kg | Standard Volume in m³ |
|---|---|---|---|---|
| Width (W) 300 mm. 1½" connection (B) | **05577** | 1 | 6.9 | 0.06 |
| Width (W) 600 mm, 2" connection (B) | **05578** | 1 | 11.9 | 0.09 |

| Code water feature | Face plate | Anchoring sockets | | Suction | | Pump | Control box | | |
|---|---|---|---|---|---|---|---|---|---|
| | | Concrete | Liner | Concrete | Liner | | Manual push button | Pneumatic push button | |
| | | | | | | | | Concrete | Liner |
| **05577** | - | - | - | **19987** x 1 | **20091** x 1 | **38770** | **19988** | **07669** | **07868** |
| **05578** | - | - | - | **19987** x 2 | **20091** x 2 | **38776** | **19989** | **17154** | **17155** |

**Note:** The pneumatic push button includes: control box, wall conduits and push button.



## SilkFlow waterfalls

Waterfall made of corrosion resistant ABS. Can be fed through the return circuit of the pool filter or through a specific pump.

| | Code | Standard Pack | Standard Weight in kg | Standard Volume in m³ |
|---|---|---|---|---|
| 300 mm waterfall | **45205** | 1 | 1.19 | 0.012 |
| 600 mm waterfall | **45206** | 1 | 2.36 | 0.021 |
| 900 mm waterfall | **45207** | 1 | 3.45 | 0.003 |
| 1200 mm waterfall | **45208** | 1 | 4.62 | 0.004 |

| Code | Required water flow l/min | Standard pump size HP | A Length of waterfall | B Width of waterfall over the pool surface, at the recommended rate of l/min/m | C Recommended height for the waterfall | D Distance of the water at the recommended rate of l/min/m |
|---|---|---|---|---|---|---|
| **45205** | 50 | 0,5 | 300 mm | 200 mm | 300 mm | 300 mm |
| **45206** | 100 | 0,5 | 600 mm | 500 mm | 600 mm | 300 mm |
| **45207** | 150 | 0,75 | 900 mm | 800 mm | 900 mm | 300 mm |
| **45208** | 200 | 0,75 | 1200 mm | 1100 mm | 900 mm | 300 mm |

## GRILLES FOR OVERFLOW

### GENERAL NOTE FOR ALL MODELS

Made of PP stabilized against UV rays. The whole range comes in white. Ask your dealer about other colours.

Made up of tiles in modules for straight and curved sections (outer radius of 1 or 2 m), they click into place (male-female fitting), which gives certain leeway in assembling them, as well as absorbing their potential expansion due to the temperature changes to which they are exposed.

For all models of grating, a channel 5 mm wider than the grating must be built so that it easily fits into place and any potential expansion is prevented.

| Channel width | Grating width |
|---|---|
| 200 | 195 |
| 250 | 245 |
| 300 | 295 |
| 350 | 345 |

The height (h) of the grating varies depending on the model.

– Longitudinal model h = 24 mm

– Transversal model h = 22 mm and h = 35 mm

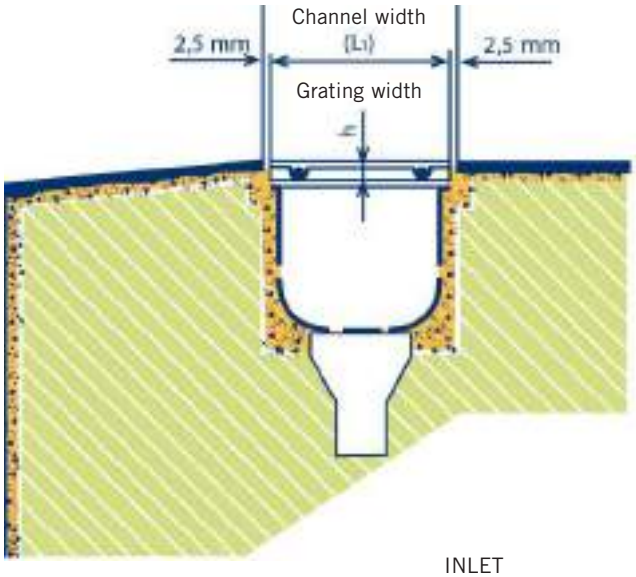


INLET
CODE 00302

### LONGITUDINAL MODEL

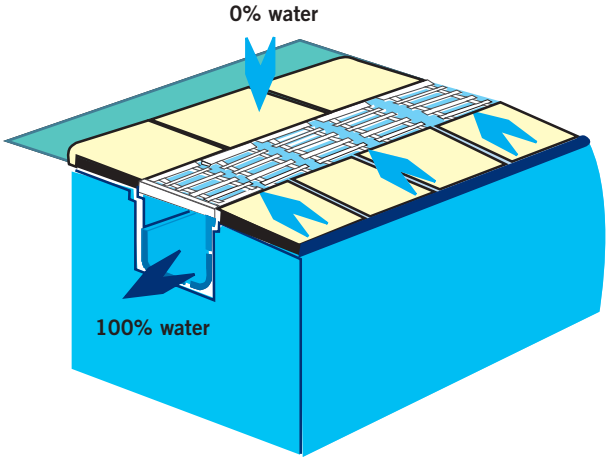


The longitudinal design of this model ensures that any excess water from the pool is not allowed to overflow onto the pool deck, thus maintaining it practically dry.

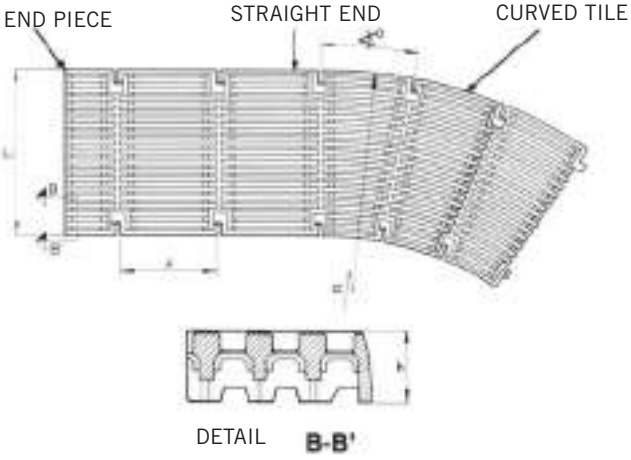


| | Model | L | L1 | h | A | ∢°r.1m. | ∢°r.2m. |
|---|---|---|---|---|---|---|---|
| STRAIGHT END | 05581 | 200 | 195 | 24 | 206 | - | - |
| | 05582 | 250 | 245 | 24 | 206 | - | - |
| | 05583 | 300 | 295 | 24 | 206 | - | - |
| | 05584 | 350 | 345 | 24 | 206 | - | - |
| END PIECE | 06420 | 200 | 195 | 24 | - | - | - |
| | 06421 | 250 | 245 | 24 | - | - | - |
| | 06422 | 300 | 295 | 24 | - | - | - |
| | 06423 | 350 | 345 | 24 | - | - | - |

+ info
Further information on **PRODUCTS**
**www.astralpool.com**

## GRILLES FOR OVERFLOW



### Longitudinal grating tile

Made of PP stabilized against UV rays. Grating fastened together using male-female hooks (5 units = 1,024 meters). The flexible properties of the grating means a radius of up to 5 m can be covered.

| | Code | Standard Pack | Standard Weight in kg | Standard Volume in $m^3$ |
|---|---|---|---|---|
| Height 24 mm, width 195 mm | **05581** | 45 | 16.2 | 0.080 |
| Height 24 mm, width 245 mm | **05582** | 29 | 13.4 | 0.080 |
| Height 24 mm, width 291 mm | **05583** | 28 | 15.6 | 0.080 |
| Height 24 mm, width 345 mm | **05584** | 19 | 13.2 | 0.080 |



### End piece kit for parallel grating

Made of AISI-304 stainless steel plate, with end piece and longitudinal grating made of PP stabilized against UV rays. Made so that the grating in the end piece can be cut to fit in place.

| | Code | Standard Pack | Standard Weight in kg | Standard Volume in $m^3$ |
|---|---|---|---|---|
| Height 24 mm, width 195 mm | **16064** | 1 | 0.380 | 0.001 |
| Height 24 mm, width 245 mm | **16065** | 1 | 0.432 | 0.002 |
| Height 24 mm, width 291 mm | **16066** | 1 | 0.525 | 0.002 |
| Height 24 mm, width 345 mm | **16067** | 1 | 0.655 | 0.002 |



### Perimeter grating

Range of overflow grating for swimming pools. Made of homopolymer polypropylene, with additives for UV protection. Available in 500 mm long modules with male-female hooks for easy and fast assembly.

| | Code | Standard Pack | Standard Weight in kg | Standard Volume in $m^3$ |
|---|---|---|---|---|
| 0.5 m longitudinal grating<br>Height 22 mm Width 195 mm | **28664** | 20 | 19.9 | 0.080 |

**Other grating colours can be made to order.**
**For further information, ask your AstralPool dealer.**

+ info
PDB
Further information on **PRODUCTS**
**www.astralpool.com**

# GRILLES FOR OVERFLOW





## Modular transversal grating for curves

Made of PP stabilized against UV rays. Assembled by fitting the modules together. Compliant with standard EN-13451-1 (8 mm). Available in 5 colours. Other grating colours can be made to order. Total of 53 units per metre. For further information, please contact your AstralPool dealer.

| | Code | Standard Pack | Standard Weight in kg | Standard Volume in $m^3$ |
|---|---|---|---|---|
| **MODULAR GRATING FOR CURVES** | | | | |
| Height 22 mm, width 195 mm | **34190** | 470 | 14.1 | 0.08 |
| Height 22 mm, width 245 mm | **34191** | 320 | 12.4 | 0.08 |
| Height 22 mm, width 295 mm | **34192** | 300 | 15.0 | 0.08 |
| Height 22 mm, width 335 mm | **34193** | 250 | 15.0 | 0.08 |
| **REVERSIBLE MODULAR GRATING FOR CURVES** | | | | |
| Height 35 mm, width 195 mm | **34194** | 450 | 16.0 | 0.08 |
| Height 35 mm, width 245 mm | **34195** | 300 | 13.7 | 0.08 |
| Height 35 mm, width 295 mm | **34196** | 290 | 17.3 | 0.08 |
| Height 35 mm, width 335 mm | **34197** | 250 | 17.4 | 0.08 |

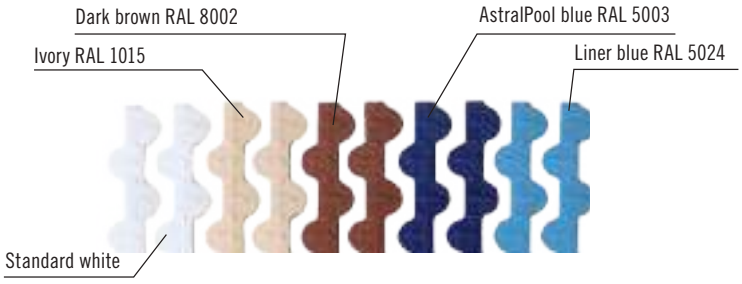


| Colour | Code |
|---|---|
| White | - |
| RAL 1015 | **CL90** |
| RAL 8002 | **CL109** |
| RAL 5003 | **CL60** |
| RAL 5024 | **CL 108** |



## Transversal grating for curves

Modular transversal grating for curves. Made of PP stabilized against UV rays. Assembled by fitting the modules together. Compliant with standard EN-13451-1 (8 mm). Class 3 slip resistance (Rd>45) pursuant to UNE-ENV 12633 and as specified in section SU1 of the Technical Building Code currently in force.

| | Code | Standard Pack | Standard Weight in kg | Standard Volume in $m^3$ |
|---|---|---|---|---|
| Height 22 mm, width 195 mm | **52535** | 470 | 14.1 | 0.08 |
| Height 22 mm, width 245 mm | **52536** | 320 | 12.4 | 0.08 |
| Height 22 mm, width 295 mm | **52537** | 300 | 15.0 | 0.08 |
| Height 22 mm, width 335 mm | **52538** | 250 | 15.0 | 0.08 |
| Height 35 mm, width 195 mm | **52539** | 450 | 16.0 | 0.08 |
| Height 35 mm, width 245 mm | **52540** | 300 | 13.7 | 0.08 |
| Height 35 mm, width 295 mm | **52541** | 290 | 17.3 | 0.08 |
| Height 35 mm, width 335 mm | **52542** | 250 | 17.4 | 0.08 |

Other grating colours can be made to order.
For further information, ask your AstralPool dealer.

Other grating colours can be made to order.
For further information, ask your AstralPool dealer.

# GRILLES FOR OVERFLOW



## Modular transversal grating for curves

Made of PP stabilized against UV rays. Assembled by fitting the modules together. Total of 45 units per metre.

| | Code | Standard Pack | Standard Weight in kg | Standard Volume in m³ |
|---|---|---|---|---|
| **MODULAR GRATING FOR CURVES** | | | | |
| Height 22 mm, width 195 mm | **11107** | 470 | 15.8 | 0.080 |
| Height 22 mm, width 245 mm | **11108** | 320 | 13.6 | 0.080 |
| Height 22 mm, width 295 mm | **19202** | 300 | 18.0 | 0.080 |
| Height 22 mm, width 335 mm | **19203** | 250 | 17.0 | 0.080 |
| **REVERSIBLE MODULAR GRATING FOR CURVES** | | | | |
| Height 35 mm, width 195 mm | **00220** | 450 | 16.5 | 0.080 |
| Height 35 mm, width 245 mm | **00221** | 300 | 14.3 | 0.080 |
| Height 35 mm, width 295 mm | **00222** | 290 | 19.3 | 0.080 |
| Height 35 mm, width 335 mm | **00223** | 250 | 18.1 | 0.080 |



## MODULAR GRATING FOR CURVES

Made of PP stabilized against UV rays. Assembled by fitting the modules together. Non-slip surface. Other colours available on request. For further information, please contact your AstralPool dealer.

| | Code | Standard Pack | Standard Weight in kg | Standard Volume in m³ |
|---|---|---|---|---|
| Height 22 mm, width 195 mm | **28656** | 470 | 20.84 | 0.082 |
| Height 22 mm, width 245 mm | **28657** | 320 | 18.80 | 0.082 |
| Height 22 mm, width 295 mm | **28658** | 300 | 18.80 | 0.082 |
| Height 22 mm, width 335 mm | **28659** | 250 | 20.84 | 0.082 |
| Height 35 mm, width 195 mm | **28660** | 450 | 26.90 | 0.082 |
| Height 35 mm, width 245 mm | **28661** | 300 | 24.70 | 0.082 |
| Height 35 mm, width 295 mm | **28662** | 290 | 26.61 | 0.082 |
| Height 35 mm, width 335 mm | **28663** | 250 | 22.25 | 0.082 |



## Transversal grating

Made of PP stabilized against UV rays. Fastened together by a pass-through cable (49 units per metre).

| | Code | Standard Pack | Standard Weight in kg | Standard Volume in m³ |
|---|---|---|---|---|
| Height 22 mm, width 195 mm | **00212** | 340 | 11.9 | 0.039 |
| Height 22 mm, width 245 mm | **00213** | 305 | 13.2 | 0.039 |



## Stainless steel plastic coated cable

Ø 2.5 mm for fastening modules together.

| | Code | Standard Pack | Standard Weight in kg | Standard Volume in m³ |
|---|---|---|---|---|
| Stainless steel plastic coated cable | **00214** | 1000 m | 21.0 | 0.036 |



## AISI-316 stainless steel plastic coated cable

Ø 2.5 mm for fastening modules together.

| | Code | Standard Pack | Standard Weight in kg | Standard Volume in m³ |
|---|---|---|---|---|
| AISI-316 stainless steel plastic coated cable | **00215** | 1000 m | 21.0 | 0.036 |

+ info
Further information on **PRODUCTS**
**www.astralpool.com**

# GRILLES FOR OVERFLOW



## Cable locking pins

Made of brass.

| | Code | Standard Pack | Standard Weight in kg | Standard Volume in m³ |
|---|---|---|---|---|
| Cable locking pins | **00216** | 100 | 1.5 | 0.001 |



## Transversal grating tile

Made of PP stabilized against UV rays. Tiles fitted together using a snap fastening system (5 units = 0.975 m).

| | Code | Standard Pack | Standard Weight in kg | Standard Volume in m³ |
|---|---|---|---|---|
| Height 22 mm, width 245 mm | **00217** | 52 | 22.8 | 0.080 |
| Height 22 mm, width 295 mm | **00218** | 45 | 23.1 | 0.080 |
| Height 22 mm, width 335 mm | **00219** | 38 | 22.0 | 0.080 |

Other grating colours can be made to order.
For further information, ask your AstralPool dealer.



## Grating support profile

Suitable for grating heights of 22, 24 and 35 mm. Made of weather resistant plastic. Supplied in 2 m strips. Inside measurements: 24 mm x 37 mm.

Available in other colours. For further information, ask your dealer.

| | Code | Standard Pack | Standard Weight in kg | Standard Volume in m³ |
|---|---|---|---|---|
| Grating support profile | **00224** | 25 | 13.2 | 0.033 |



## 90° corner tiles for overflow channels

Made of white, injection moulded copolymer polypropylene.

| | Code | Standard Pack | Standard Weight in kg | Standard Volume in m³ |
|---|---|---|---|---|
| Height 22 mm, channel width 195 mm | **22379** | 4 | 2.8 | 0.006 |
| Height 22 mm, channel width 245 mm | **22380** | 4 | 3.6 | 0.009 |
| Height 22 mm, channel width 295 mm | **22381** | 4 | 4.8 | 0.012 |
| Height 22 mm, channel width 335 mm | **22382** | 4 | 5.7 | 0.016 |
| Height 35 mm, channel width 195 mm | **22383** | 4 | 3.2 | 0.009 |
| Height 35 mm, channel width 245 mm | **22384** | 4 | 4.1 | 0.014 |
| Height 35 mm, channel width 295 mm | **22385** | 4 | 5.3 | 0.012 |
| Height 35 mm, channel width 335 mm | **22386** | 4 | 6.2 | 0.023 |

Other grating colours can be made to order.
For further information, ask your AstralPool dealer.

## GRILLES FOR OVERFLOW



Complies with Standard **EN 13451-1-3**

Complies with Standards **EN 16582-1** **EN 16713-2**

### Stainless steel longitudinal grating

Longitudinal grating made of stainless steel. A channel 5 mm wider than the grating must be dug so that it is easy to fit.

It is made up of straight sections of AISI-316 stainless steel, 500 mm in length. Straight sections can be made to measure in order to fit the length of any pool.

There are 4 different models depending on the grating used. Height 35 mm.

| | Code | Standard Pack | Standard Weight in kg | Standard Volume in $m^3$ |
|---|---|---|---|---|
| Stainless steel 195 mm longitudinal grating | **32415** | - | - | - |
| Stainless steel 245 mm longitudinal grating | **32416** | - | - | - |
| Stainless steel 295 mm longitudinal grating | **32417** | - | - | - |
| Stainless steel 345 mm longitudinal grating | **32418** | - | - | - |



**70956**

### Stainless steel reinforced grating

AISI-316 stainless steel grating, compliant with standard EN: 1345-1:2000. Resistant to salt water. Intended for use in both residential and public pools.

| | Code | Standard Pack | Standard Weight in kg | Standard Volume in $m^3$ |
|---|---|---|---|---|
| Reinforced 252 x 252 mm grating | **70956** | 1 | - | - |
| Reinforced 410 x 410 mm grating | **70957** | 1 | - | - |



**70957**

Complies with Standard **EN 1345-1:2000**





# POOL SHELL EQUIPMENT



71 • AstralPool pool shell material color range

## Concrete pool

72 • 15 l skimmers
73 • 17,5 l skimmers
76 • Skimmer Accessories
77 • S.S. Skimmers
80 • Skimmer accessories in S.S.
80 • Water level regulators
81 • Main drains
85 • Main drain accessories
86 • Drain grilles
88 • ABS inlets
93 • S.S. inlets
95 • Wall bushings

## Liner and prefabricated pool

96 • 15 l Skimmers
98 • 17,5 l Skimmers
101 • Skimmer Accessories
102 • Main drains
106 • Main drain accessories
107 • Water level regulators
107 • ABS inlets
112 • S.S. inlets
113 • Wall bushings

114 • Skimfilters
115 • Swimming pool shell material packs
117 • Installation diagrams

# POOL SHELL MATERIALS

## RANGE OF COLORS

### VERSATILITY AND COLOR FOR YOUR POOL

A wide range of recessed components
in different colors for a perfect finish
in your prefabricated pool.



ASTRALPOOL

## ASTRALPOOL POOL SHELL MATERIAL COLOR RANGE

Summary of the standard pool fits that exist in color version :
- Beige
- Light Grey
- Anthracite

| Family | | Descriptions | Concrete pool | Colors | Page | Liner and Prefabricated pool | Colors | Page |
|---|---|---|---|---|---|---|---|---|
| Skimmer | 15L | Skimmer 15L STD - opening | 00249CLXXX | | 72 | | | |
| | | Skimmer 15L - with wide mouth opening | 00251CLXXX | | 72 | 34413CLXXX | | 96 |
| | 17.5L | Skimmer Norm - with inserts | | | | 56176CLXXX | | 98 |
| | | Skimmer Norm - without inserts | 58707CLXXX | | 73 | 56299CLXXX | | 98 |
| | | Skimmer 17,5L - with standard mouth opening | | | | 11309CLXXX | | 98 |
| | | Skimmer 17,5L - with standard opening | | | | 11310CLXXX | | 99 |
| | | Skimmer 17,5L - with standard opening for parker model | | | | 11316CLXXX | | 99 |
| | | Skimmer 17,5L with wide mouth opening | | | | 11311CLXXX | | 100 |
| | | Skimmer 17,5L - with wide mouth opening for parker model | | | | 11317CLXXX | | 100 |
| Main drain | | Norm main drain | 56378CLXXX | | 81 | 56380CLXXX | | 102 |
| | | Norm main drain - Antivortex grating | 56379CLXXX | | 81 | 56382CLXXX | | 102 |
| | | Norm main drain - without inserts | | | | 56381CLXXX | | 102 |
| | | Norm main drain - ithout inserts Antivortex grating | | | | 56383CLXXX | | 102 |
| | | Round main drain 2" oulet | | | | 00271CLXXX | | 103 |
| | | Round main drain 2" oulet - without inserts | 01467CLXXX | | 81 | 06474CLXXX | | 103 |
| Nozzles | Impulsion | Multiflow return inlet | 00295CLXXX | | 89 | 00330CLXXX | | 107 |
| | | Multiflow return inlet | 00298CLXXX | | 89 | 00334CLXXX | | 107 |
| | | Multiflow return inlet | | | | 17383CLXXX | | 108 |
| | | Norm return inlet | | | | 56499CLXXX | | 108 |
| | | Norm return inlet | | | | 56500CLXXX | | 108 |
| | Suction Pool Floor | Suction nozzle | 00300CLXXX | | 90 | 17382CLXXX | | 110 |
| | | Suction nozzle 2" | | | | 00336CLXXX | | 110 |
| | Pool Floor | Pool floor return inlet | 00303CLXXX | | 90 | 00340CLXXX | | 109 |
| | | Pool floor return inlet with swivel joint | 22353CLXXX | | 91 | | | |
| Net & clean | | Nozzles | 65234CLXXX | | | | | 232 |
| Lighting | Flexi | Faceplate Niche | 71209CLXXX | | | | | 241 |
| | | Faceplate Slim | 71210CLXXX | | | | | 241 |
| | | Faceplate Rapid | 71211CLXXX | | | | | 246 |
| | Mini | Faceplate Mini V2 | 08554-0500CLXXX | | | | | 246 |
| | | Faceplate Mini V2 Niche | 04582-0500CLXXX | | | | | 246 |

XXXXXCL090 Beige  XXXXCL129 Light grey  XXXXXCL144 Anthracite

+ info

Choice of cover colours for skimmers

# CONCRETE POOL - 15 L SKIMMERS

All of the components that are exposed in this range of skimmers come with a UV treatment. Made of white ABS, they come with a weir flap and a flow regulator check valve. Bottom suction nozzle connection: 1½" inner thread, 2" outer thread. Simultaneous connection to the main drain: Ø 50 mm inner wall. Overflow connection: Ø 40 mm. Leaf trap. Recommended flow rate: 5 m³/h. It is recommended that one skimmer be installed for every 25 m² of water surface area.

## Skimmer with standard mouth opening


00249CL090


00249


00249CL144


00249CL129

Complies with Standards
**EN 16582-1**
**EN 16713-2**

| | Code | Standard Pack | Standard Weight in kg | Standard Volume in m³ |
|---|---|---|---|---|
| With round lid - White | **00249** | 1 | 2.95 | 0.059 |
| With round lid - Beige | **00249CL090** | 1 | 2.95 | 0.059 |
| With round lid - Light Grey | **00249CL129** | 1 | 2.95 | 0.059 |
| With round lid - Anthracite Grey | **00249CL144** | 1 | 2.95 | 0.059 |
| With square lid | **00250** | 1 | 3.15 | 0.059 |

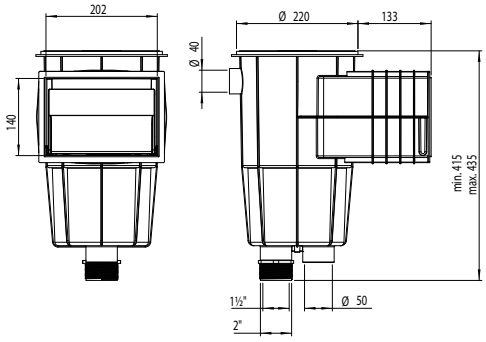


## Skimmer with wide mouth opening


00251CL090


00251


00251CL144


00251CL129

Complies with Standards
**EN 16582-1**
**EN 16713-2**

| | Code | Standard Pack | Standard Weight in kg | Standard Volume in m³ |
|---|---|---|---|---|
| With round lid - White | **00251** | 1 | 4.47 | 0.12 |
| With round lid - Beige | **00251CL090** | 1 | 4.47 | 0.12 |
| With round lid - Light Grey | **00251CL129** | 1 | 4.47 | 0.12 |
| With round lid - Anthracite Grey | **00251CL144** | 1 | 4.47 | 0.12 |
| With square lid | **00252** | 1 | 3.00 | 0.12 |

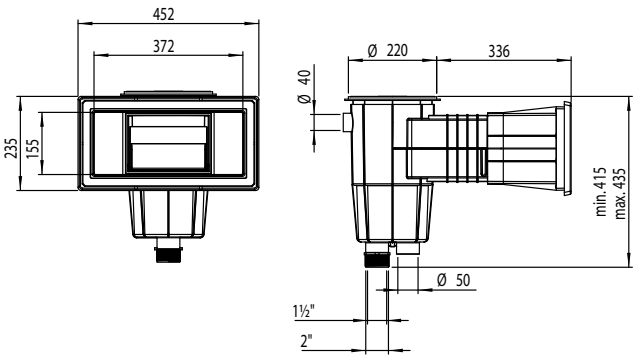

## CONCRETE POOL - 17.5 L SKIMMERS

All of the components that are exposed in this range of skimmers come with a UV treatment. Made of white ABS, they come with a weir flap and a flow regulator check valve. Bottom suction nozzle connection: 1½" inner thread. Simultaneous connection to the main drain: 2" inner thread. Overflow connection: Ø 32 mm. Round cover with spring clip fastening system. The height of the cover can be adjusted and turned through an extended throat, so that it sits perfectly flush with the coping stone. Leaf trap secured to base by means of a bayonet mount. In-built weir flap housing. **Recommended flow rate: 7.5 m³/h. It is recommended that one skimmer be installed for every 25 m² of water surface area.**



**58707**



**58707CL090**



**58707CL129**



**58707CL144**

Complies with Standard **EN 13451-1-3**

Complies with Standards **EN 16582-1** **EN 16713-2**

### NORM skimmer

17L skimmer range suitable for installation in public and private pools. Manufactured in white ABS with UV treatment, it comes with a weir flap, flow regulator, lid height adjustment and basket. The water inlet is 495 x 80 mm. Recommended flow rate of 7.5 m³/h. Install one skimmer every 25 m² of water line surface area. Connections under 1 ½" and 2", water overflow connection of Ø 40 mm.

| | Code | Standard Pack | Standard Weight in kg | Standard Volume in m³ |
|---|---|---|---|---|
| **NORM 17 L skimmer for concrete pools** | | | | |
| White | **58707** | 1 | 5.61 | 0.182 |
| Beige | **58707CL090** | 1 | 5.61 | 0.182 |
| Light Grey | **58707CL129** | 1 | 5.61 | 0.182 |
| Anthracite Grey | **58707CL144** | 1 | 5.61 | 0.182 |

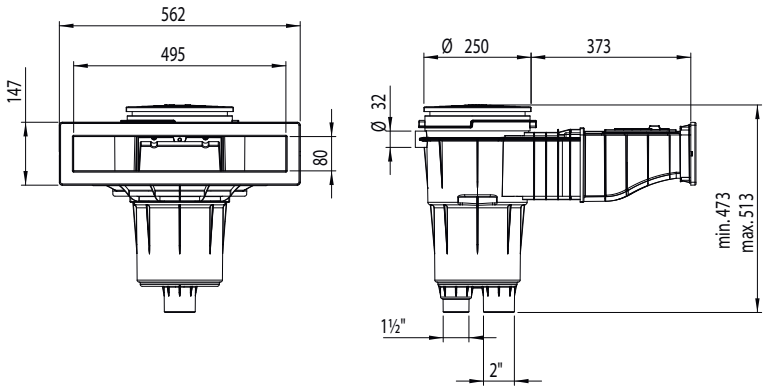




Complies with Standards **EN 16582-1** **EN 16713-2**

### Skimmer with standard mouth opening

| | Code | Standard Pack | Standard Weight in kg | Standard Volume in m³ |
|---|---|---|---|---|
| With round lid | **05589** | 1 | 4.20 | 0.062 |
| With square lid | **11306** | 1 | 4.20 | 0.062 |

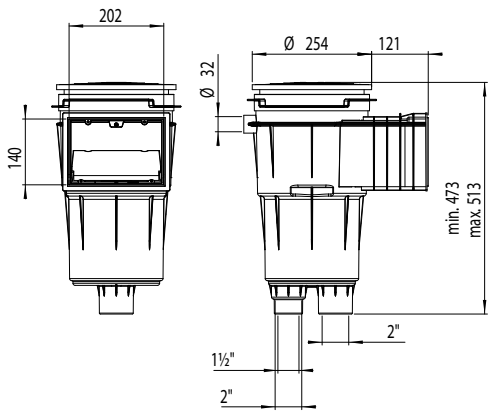

+ info
Further information on **PRODUCTS**
www.astralpool.com

# CONCRETE POOL - 17.5 L SKIMMERS

## Skimmer with standard opening and face plate



Complies with Standards
**EN 16582-1**
**EN 16713-2**

| | Code | Standard Pack | Standard Weight in kg | Standard Volume in m³ |
|---|---|---|---|---|
| With round lid | **05280** | 1 | 5.10 | 0.062 |
| With square lid | **11302** | 1 | 5.20 | 0.062 |

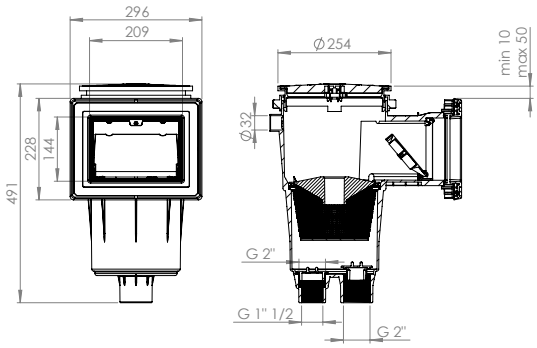


## Skimmer with standard opening and extended throat



Complies with Standards
**EN 16582-1**
**EN 16713-2**

| | Code | Standard Pack | Standard Weight in kg | Standard Volume in m³ |
|---|---|---|---|---|
| With round lid | **05590** | 1 | 4.85 | 0.077 |
| With square lid | **11307** | 1 | 5.90 | 0.077 |

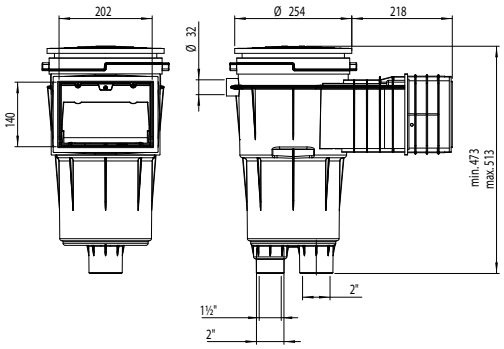


## Skimmer with standard opening, extended throat and face plate



Complies with Standards
**EN 16582-1**
**EN 16713-2**

| | Code | Standard Pack | Standard Weight in kg | Standard Volume in m³ |
|---|---|---|---|---|
| With round lid | **05281** | 1 | 5.09 | 0.077 |
| With square lid | **11303** | 1 | 5.75 | 0.060 |

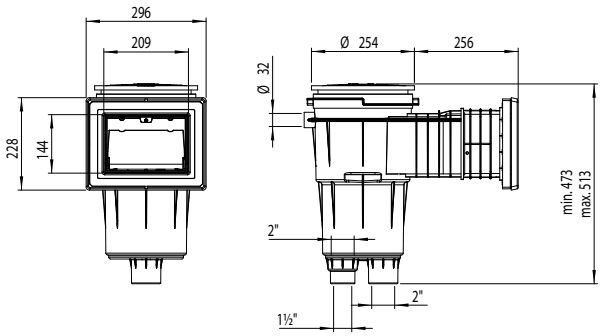


Until end of stocks

## CONCRETE POOL - 17.5 L SKIMMERS

### Skimmer with wide mouth opening

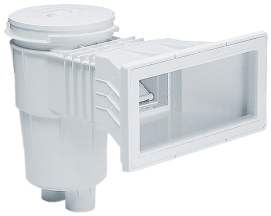

Complies with Standards
**EN 16582-1**
**EN 16713-2**

| | Code | Standard Pack | Standard Weight in kg | Standard Volume in m³ |
|---|---|---|---|---|
| With round lid | **05282** | 1 | 6.20 | 0.135 |
| With square lid | **11304** | 1 | 6.24 | 0.135 |

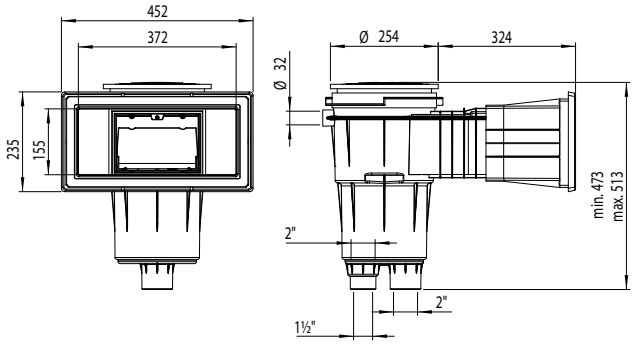


### Skimmer with extended throat and wide opening

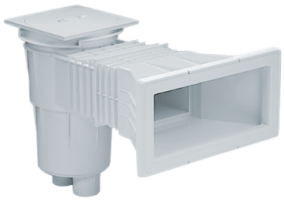

Complies with Standards
**EN 16582-1**
**EN 16713-2**

| | Code | Standard Pack | Standard Weight in kg | Standard Volume in m³ |
|---|---|---|---|---|
| With round lid | **05283** | 1 | 6.75 | 0.161 |
| With square lid | **11305** | 1 | 6.90 | 0.161 |

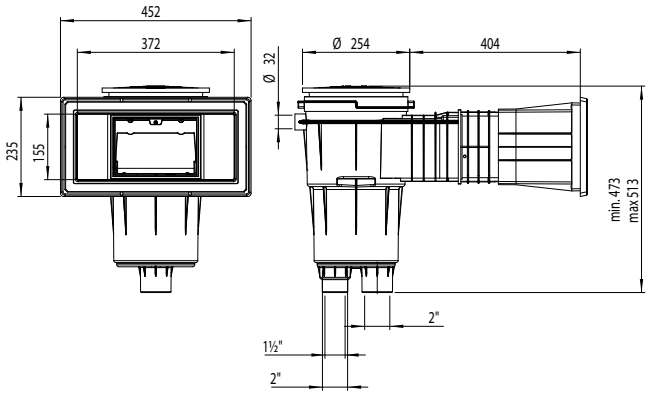




The 17.5 litre skimmer can be made to order with much larger throat extensions than the standard size. This can be particularly useful if wider coping stones than usual are installed.

Until end of stocks

+ info
Further information on **PRODUCTS**
www.astralpool.com

# CONCRETE POOL - SKIMMER ACCESSORIES




## Covers for 15 l skimmers

| | Code | Standard Pack | Standard Weight in kg | Standard Volume in m³ |
|---|---|---|---|---|
| **Round cover, round face plate** | | | | |
| Beige | **00249-0600CL090** | 23units | 7.9Kg | 0.069m³ |
| Light grey | **00249-0600CL129** | 23units | 7.9Kg | 0.069m³ |
| Anthracite grey | **00249-0600CL144** | 23units | 7.9Kg | 0.069m³ |
| **Round cover, square face plate** | | | | |
| Beige | **00249-0700CL090** | 13units | 6.9Kg | 0.069m³ |
| Light grey | **00249-0700CL129** | 13units | 6.9Kg | 0.069m³ |
| Anthracite grey | **00249-0700CL144** | 13units | 6.9Kg | 0.069m³ |




## Covers for 17.5 l skimmers

| | Code | Standard Pack | Standard Weight in kg | Standard Volume in m³ |
|---|---|---|---|---|
| **Round cover, round face plate** | | | | |
| Beige | **05280-0600CL090** | 15units | 8Kg | 0.069m³ |
| Light grey | **05280-0600CL129** | 15units | 8Kg | 0.069m³ |
| Anthracite grey | **05280-0600CL144** | 15units | 8Kg | 0.069m³ |
| **Round cover, square face plate** | | | | |
| Beige | **05280-0700CL090** | 15units | 8Kg | 0.069m³ |
| Light grey | **05280-0700CL129** | 15units | 8Kg | 0.069m³ |
| Anthracite grey | **05280-0700CL144** | 15units | 8Kg | 0.069m³ |

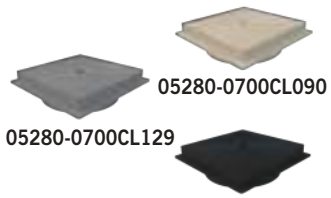




## 15 l skimmer cover extension ring

Additional extension ring to increase the distance between the 15 l skimmer and the lid. Additional distance of 25 mm. Made of ABS. The height can be increased by overlaying various connections. It can also be slightly tipped to be level with the ground.

| Code | Standard Pack | Standard Weight in kg | Standard Volume in m³ |
|---|---|---|---|
| **19919** | 17 | 4.08 | 0.069 |



## 17.5 l skimmer cover extension ring

Additional ring for better adjusting and levelling the 17.5 l skimmer lid to the deck level. Additional distance of 20 mm. Made of white ABS. The height can be increased by overlaying various connections. It can also be slightly tipped to be level with the ground.

| Code | Standard Pack | Standard Weight in kg | Standard Volume in m³ |
|---|---|---|---|
| **18153** | 17 | 4.70 | 0.06 |

## CONCRETE POOL - SKIMMER ACCESSORIES



### Floating weir assembly in ABS

Complete with strainer basket in white ABS.

| | Code | Standard Pack | Standard Weight in kg | Standard Volume in $m^3$ |
|---|---|---|---|---|
| For 15 l skimmers | **00253** | 12 | 20.5 | 0.207 |
| For 17.5 l skimmers | **05703** | 12 | 20.5 | 0.207 |




### Prefilters for skimmer basket

Hygienic disposable prefilters for any type of skimmer (with baskets up to Ø 24 cm). They retain the waste that builds up in the skimmer basket. This protects the pump and the filter therefore performs better.

| | Code | Standard Pack | Standard Weight in kg | Standard Volume in $m^3$ |
|---|---|---|---|---|
| 12 units per box. | **25768** | 12 | 0.40 | 0.006 |

## CONCRETE POOL - STAINLESS STEEL SKIMMERS



Complies with Standards
**EN 16582-1**
**EN 16713-2**

### Skimmer inox A-500 Large mouth

New

In Aisi-316 stainless steel. With Ø50mm overflow, basket and lid in stainless steel, both included. It has accommodation to mount the level regulator valve 00256 (see page 80). With connection for equipotential connection. Flow recommended 7.5 $m^3$ / h.

| | Code | Standard Pack | Standard Weight in kg | Standard Volume in $m^3$ |
|---|---|---|---|---|
| Mouth width 500 mm | **56313** | 1 | 14.84 | 0.136 |
| Mouth width 650 mm | **56316** | 1 | 14.84 | 0.136 |
| Mouth width 500 mm, 6º inclination | **72744** | 1 | 14.84 | 0.136 |
| Mouth width 650 mm, 6º inclination | **72743** | 1 | 14.84 | 0.136 |

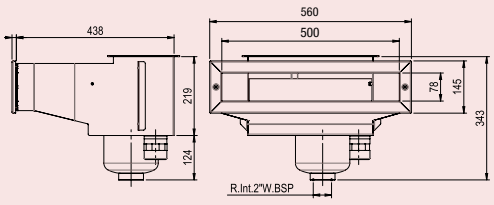

+ info
Further information on **PRODUCTS**
www.astralpool.com

# CONCRETE POOL - STAINLESS STEEL SKIMMERS



## Full A-100 stainless steel skimmer

In AISI-316 stainless steel. With Ø 50mm overflow. Stainless steel basket and lid included. Comes with housing for assembling the 00256 level regulator valve (see page 80). With connection for an equipotential outlet. Recommended flow rate: 7.5 m³/h. Does not include trim code 00255.

| | Code | Standard Pack | Standard Weight in kg | Standard Volume in m³ |
|---|---|---|---|---|
| Suction connection, 2" thread | **00254** | 1 | 8.4 | 0.04 |

Complies with Standards
**EN 16582-1**
**EN 16713-2**

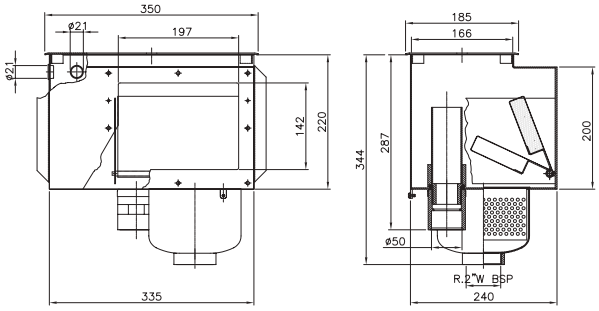




## Decorative face plate

For skimmer 00254. Made of AISI-316 stainless steel.

| Code | Standard Pack | Standard Weight in kg | Standard Volume in m³ |
|---|---|---|---|
| **00255** | 1 | 0.62 | 0.003 |

Complies with Standards
**EN 16582-1**
**EN 16713-2**



## A-201 skimmer body

In AISI-316 stainless steel. With Ø 50mm overflow. Skimmer housing without telescopic lid. Comes with housing for assembling the 00256 level regulator valve (see page 80). With connection for an equipotential outlet. Basket can be removed from front. Does not include trim code 07251.
Ø 63 mm suction connection.

| Code | Standard Pack | Standard Weight in kg | Standard Volume in m³ |
|---|---|---|---|
| **07520** | 1 | 6.51 | 0.04 |

Complies with Standards
**EN 16582-1**
**EN 16713-2**

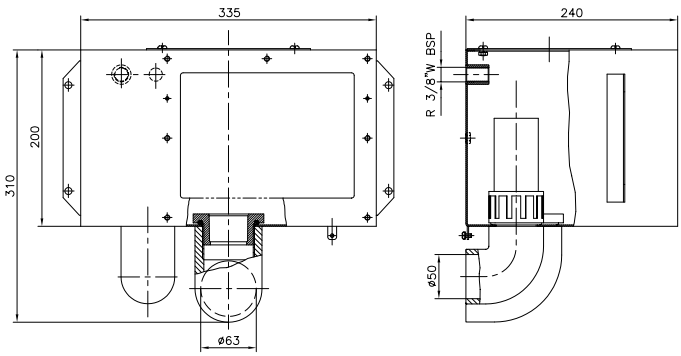

## CONCRETE POOL - STAINLESS STEEL SKIMMERS



### A-202 skimmer body

In AISI-316 stainless steel. With Ø 50 mm overflow. Skimmer housing without telescopic lid. With earth connection. Basket can be removed from front. Does not include trim code 07251.

| | Code | Standard Pack | Standard Weight in kg | Standard Volume in $m^3$ |
|---|---|---|---|---|
| Ø 63 mm suction connection | **07610** | 1 | 5.25 | 0.04 |

Complies with Standards
**EN 16582-1**
**EN 16713-2**

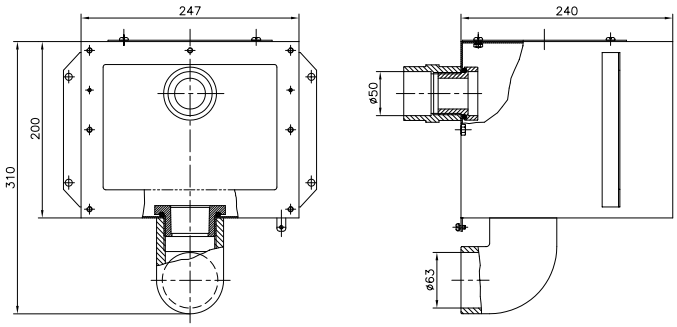




### Basket for A-201 and A-202 skimmers

Basket in AISI-316 stainless steel. Includes face plate for direct removal through skimmer opening.

| Code | Standard Pack | Standard Weight in kg | Standard Volume in $m^3$ |
|---|---|---|---|
| **07521** | 1 | 2.19 | 0.02 |

Complies with Standards
**EN 16582-1**
**EN 16713-2**



### A-400 skimmer body

In AISI-316 stainless steel. With Ø 50mm overflow. Skimmer housing without telescopic lid. Comes with housing for assembling the 00256 level regulator valve (see page 80). With connection for an equipotential outlet.

| | Code | Standard Pack | Standard Weight in kg | Standard Volume in $m^3$ |
|---|---|---|---|---|
| Ø 63 mm suction connection | **07523** | 1 | 8.0 | 0.06 |

Complies with Standards
**EN 16582-1**
**EN 16713-2**

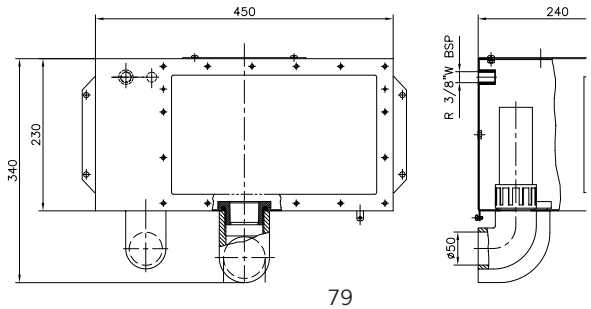

+ info
Further information on **PRODUCTS**
**www.astralpool.com**

## CONCRETE POOL - STAINLESS STEEL SKIMMER ACCESSORIES



### Basket for A-400 skimmer

Direct removal through skimmer throat. Wide model. In AISI-316 stainless steel.

| Code | Standard Pack | Standard Weight in kg | Standard Volume in $m^3$ |
|---|---|---|---|
| **07522** | 1 | 3.5 | 0.04 |

Complies with Standards
**EN 16582-1**
**EN 16713-2**



### Telescopic lid

In AISI-316 stainless steel. For models A-201, A-202 and A-400. 180 x 180 mm lid. Adjustable height from 60 to 110 mm.

| Code | Standard Pack | Standard Weight in kg | Standard Volume in $m^3$ |
|---|---|---|---|
| **07524** | 1 | 1.63 | 0.01 |

Complies with Standard
**EN 13451-1-3**

Complies with Standards
**EN 16582-1**
**EN 16713-2**



### Water level regulator valve

Can be fitted to all stainless steel skimmers, except for model A-202. Adjustable opening. 3/8" connection.

| Code | Standard Pack | Standard Weight in kg | Standard Volume in $m^3$ |
|---|---|---|---|
| **00256** | 1 | 0.21 | 0.002 |

## CONCRETE POOL - LEVEL REGULATORS



### Universal level regulator

Made of ABS. May be connected from the bottom or side, as required. Semi-die cut outlets to the pool so that the most suitable connection can be made. Adjustable lid height and level.
For all types of skimmers.

| Code | Standard Pack | Standard Weight in kg | Standard Volume in $m^3$ |
|---|---|---|---|
| **15862** | 1 | 2.0 | 0.016 |

# CONCRETE POOL - DRAINS

All main drains in the range are supplied with UV protection.
To prevent the risk of suction, install the main drains according to local regulations.
Recommended use:

- Maximum suction rate of 0.5 m/s.
- Install at least 2 main drains, each with a suction capacity able to handle the pool's full flow rate.



**56378**



**56378CL090**



**56378CL129**



**56378CL144**

## NORM main drain

Range of main drains suitable for public and private swimming pools. Supplied with flat or antivortex grilles. Manufactured in white ABS with UV treatment, fitted with a 2" side outlet and a 1 ½" bottom outlet connection, bottom outlet covered by semi-die cut tab.

| | Code | Standard Pack | Standard Weight in kg | Standard Volume in m³ |
|---|---|---|---|---|
| Flat grating - White | **56378** | 4 | 10.60 | 0.069 |
| Flat grating - Beige | **56378CL090** | 4 | 10.60 | 0.069 |
| Flat grating - Light grey | **56378CL129** | 4 | 10.60 | 0.069 |
| Flat grating - Anthracite grey | **56378CL144** | 4 | 10.60 | 0.069 |
| Antivortex grating - White | **56379** | 4 | 10.60 | 0.069 |
| Antivortex grating - Beige | **56379CL090** | 4 | 10.60 | 0.069 |
| Antivortex grating - Light grey | **56379CL129** | 4 | 10.60 | 0.069 |
| Antivortex grating - Anthracite grey | **56379CL144** | 4 | 10.60 | 0.069 |



**56379**
Also available in other colours

Complies with Standard **EN 13451-1-3**

Complies with Standards **EN 16582-1** **EN 16713-2**

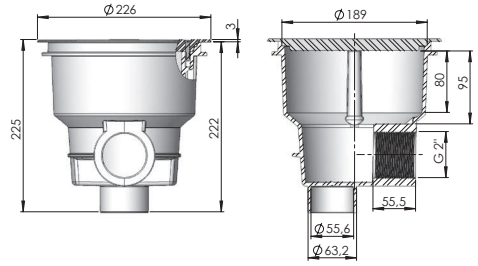




## Round Ø 270 mm main drain with ABS grating

Bottom 1 ½" and side 2" outlets. Fully manufactured in white ABS. Side outlet for plug to test watertightness. Bottom outlet with plug and possibility of fitting a hydrostatic valve code 00277 (see page 85) and drainage tube code 21581, (see page 85). Ø 250mm suction grille. Max. flow rate: 13 m³/h.

| | Code | Standard Pack | Standard Weight in kg | Standard Volume in m³ |
|---|---|---|---|---|
| Standard thread | **01466** | 4 | 5.0 | 0.045 |



**01467**



**01467CL090**



**01467CL129**



**01467CL144**

## Round main drains 2" outlet

Body and grill in ABS. Grill fitted using screws. Max. flow rate: 13 m³/h.

| | Code | Standard Pack | Standard Weight in kg | Standard Volume in m³ |
|---|---|---|---|---|
| Standard thread - White | **01467** | 4 | 2.8 | 0.028 |
| Standard thread - Beige | **01467CL090** | 4 | 2.8 | 0.028 |
| Standard thread - Light grey | **01467CL129** | 4 | 2.8 | 0.028 |
| Standard thread - Anthracite grey | **01467CL144** | 4 | 2.8 | 0.028 |

+ info PDB
Further information on **PRODUCTS**
www.astralpool.com

# CONCRETE POOL - DRAINS



## Round Ø 200 mm main drain with antivortex grille

Manufactured in white ABS material. 2" side outlet and 1 ½" bottom outlet. Bottom outlet covered by semi-die cut socket, which can be opened as required. Possibility of fitting drainage tube code 21581 (see page 85). Max. flow rate: 13 m³/h.

| | Code | Standard Pack | Standard Weight in kg | Standard Volume in m³ |
|---|---|---|---|---|
| Standard thread | **27837** | 4 | 2.807 | 0.033 |



## Round Ø 200 mm main drain with flat grille

Made of white ABS. 2" side outlet and 1½" bottom outlet. Bottom outlet covered by semi-die cut socket, which can be opened as required. Max. flow rate: 13 m³/h.

| | Code | Standard Pack | Standard Weight in kg | Standard Volume in m³ |
|---|---|---|---|---|
| Standard thread | **27839** | 4 | 2.807 | 0.033 |



## Main drain with square ABS grille (210 mm x 210 mm)

2" side outlet. Body and grille in white ABS. Grille fitted using screws.
Max. flow rate: 13 m³/h.

| Code | Standard Pack | Standard Weight in kg | Standard Volume in m³ |
|---|---|---|---|
| **00258** | 4 | 4.0 | 0.044 |

Complies with Standards
**EN 16582-1**
**EN-16713-2**



**00268**

## Round main drain in stainless steel. 2" outlet

2" side outlet. Made of stainless steel. AISI-316. Grille fitted using screws. Maximum flow rate: 13 m³/h.

| | Code | Standard Pack | Standard Weight in kg | Standard Volume in m³ |
|---|---|---|---|---|
| 2" side outlet" | **00268** | 1 | 2.56 | 0.02 |
| 2" side outlet and 1½" bottom outlet connection | **26196** | 1 | 2.80 | 0.02 |



**26196**

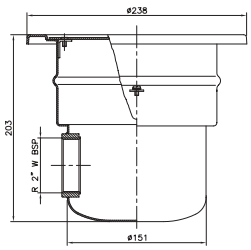


Complies with Standard
**EN 13451-1-3**

Complies with Standards
**EN 16582-1**
**EN-16713-2**

## CONCRETE POOL - DRAINS

### Main drain with square cover in stainless steel. Outlet 1 ½"



Complies with Standards
**EN 16582-1**
**EN-16713-2**

Bottom outlet 1 ½". Manufactured in stainless steel. AISI-316 Antivortex lid. Can be used in concrete and prefabricated pools with an 00276 adapter. Maximum flow rate: 6 m³/h.

| | Code | Standard Pack | Standard Weight in kg | Standard Volume in m³ |
|---|---|---|---|---|
| Bottom 1½" outlet | **08463** | 1 | 1.14 | 0.01 |

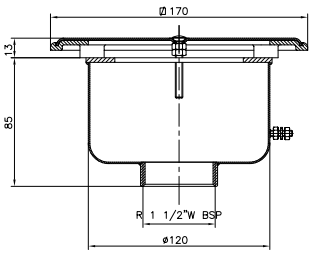


### Main drain with square cover in stainless steel. 2" outlet



2" side outlet. Manufactured in stainless steel. AISI-316. Antivortex lid. Can be used in concrete and prefabricated pools with a 00276 adapter (see page 104). Maximum flow rate: 6 m³/h.

| Code | Standard Pack | Standard Weight in kg | Standard Volume in m³ |
|---|---|---|---|
| **00269** | 1 | 1.14 | 0.01 |

### NORM main drain in polyester and fibreglass - 330 mm x 330 mm



Complies with Standard
**EN 13451-1/3 2012**

Range of main drains manufactured in polyester resin and fibreglass. Grille in stainless steel or plastic. Optional hydrostatic valve.

| | | | Code | Standard Pack | Standard Weight in kg | Standard Volume in m³ |
|---|---|---|---|---|---|---|
| **Grille in stainless steel** | | | | | | |
| **Outlet connection to be glued** | **Grille** | **Flow rate** | | | | |
| Ø 75 mm | S.S. | 15 m³/h | **20282N** | 1 | 8 | 0.08 |
| Ø 90 mm | S.S. | 23 m³/h | **20283N** | 1 | 9 | 0.08 |
| Ø 110 mm | S.S. | 27 m³/h | **20284N** | 1 | 10 | 0.08 |
| **Plastic grille** | | | | | | |
| **Outlet connection to be glued** | **Grille** | **Flow rate** | | | | |
| Ø 75 mm | Plastic | 15 m³/h | **22359N** | 1 | 8 | 0.08 |
| Ø 90 mm | Plastic | 23 m³/h | **22360N** | 1 | 9 | 0.08 |
| Ø 110 mm | Plastic | 28 m³/h | **22361N** | 1 | 10 | 0.08 |
| Ø 125 mm | Plastic | 37 m³/h | **22362N** | 1 | 11 | 0.08 |

Minimum depth of installation: 1.5 m. Maximum recommended flow rate down drain: 103 m³/h (0.5 m/s).

+ info
PDB
Further information on **PRODUCTS**
**www.astralpool.com**

# CONCRETE POOL - DRAINS



## Model in polyester and fibreglass - 330 mm x 330 mm

With a gelcoat finish. With optional hydrostatic valve.

Grille in stainless steel. AISI-316. Holes < 8 mm

| Outlet connection to be glued | Grille | Flow rate | Code | Standard Pack | Standard Weight in kg | Standard Volume in m³ |
|---|---|---|---|---|---|---|
| Ø 75 mm | AISI-316 | 16 m³/h | **20282** | 1 | 5 | 0.047 |
| Ø 90 mm | AISI-316 | 22 m³/h | **20283** | 1 | 5 | 0.047 |
| Ø 110 mm | AISI-316 | 33 m³/h | **20284** | 1 | 5 | 0.047 |



Grille in ABS plastic with protection against UV rays.

| Outlet connection to be glued | Grille | Flow rate | Code | Standard Pack | Standard Weight in kg | Standard Volume in m³ |
|---|---|---|---|---|---|---|
| Ø 75 mm | Plastic | 16 m³/h | **22359** | 1 | 4.5 | 0.034 |
| Ø 90 mm | Plastic | 22 m³/h | **22360** | 1 | 4.5 | 0.034 |
| Ø 110 mm | Plastic | 33 m³/h | **22361** | 1 | 4.5 | 0.034 |
| Ø 125 mm | Plastic | 43 m³/h | **22362** | 1 | 4.5 | 0.034 |

Optional standard American size and antivortex in standard American size

Maximum recommended flow rate in accordance with standard EN 13451-1.



## NORM main drain in polyester and fibreglass - 512 mm x 512 mm

Range of drains manufactured in polyester resin and fibreglass. Grille in AISI-316 stainless steel or plastic. Optional hydrostatic valve.

**Grille in stainless steel**

| Outlet connection to be glued | Grille | Flow rate | Code | Standard Pack | Standard Weight in kg | Standard Volume in m³ |
|---|---|---|---|---|---|---|
| Ø 110 mm | S.S. | 42 m³/h | **20285N** | 1 | 16 | 0.23 |
| Ø 125 mm | S.S. | 51 m³/h | **20286N** | 1 | 17 | 0.23 |
| Ø 140 mm | S.S. | 66 m³/h | **20287N** | 1 | 18 | 0.23 |
| Ø 160 mm | S.S. | 95 m³/h | **20288N** | 1 | 19 | 0.23 |
| Ø 200 mm | S.S. | 103 m³/h | **20289N** | 1 | 20 | 0.23 |

**Plastic grille**

| Outlet connect. to be glued | Grille | Flow rate | Code | Standard Pack | Standard Weight in kg | Standard Volume in m³ |
|---|---|---|---|---|---|---|
| Ø 110 mm | Plastic | 42 m³/h | **28709N** | 1 | 15 | 0.23 |
| Ø 125 mm | Plastic | 51 m³/h | **28710N** | 1 | 16 | 0.23 |
| Ø 140 mm | Plastic | 66 m³/h | **28711N** | 1 | 17 | 0.23 |
| Ø 160 mm | Plastic | 95 m³/h | **28712N** | 1 | 18 | 0.23 |
| Ø 200 mm | Plastic | 103 m³/h | **28713N** | 1 | 19 | 0.23 |

UNE-EN 13451-1-3

Complies with Standard
**EN 13451-1/3 2012**

Optional:
Standard American sizes

Minimum depth of installation: 1.5 m. Maximum recommended flow rate down drain: 103 m³/h (0.5 m/s).

## CONCRETE POOL - DRAINS

### Model in polyester and fibreglass - 512 mm x 512 mm

With a gelcoat finish. With optional hydrostatic valve.





| Outlet connection to be glued | Grille | Flow rate | Code | Standard Pack | Standard Weight in kg | Standard Volume in m³ |
|---|---|---|---|---|---|---|
| **Grille in AISI-316 stainless steel. Holes < 8 mm** | | | | | | |
| Ø 110 mm | AISI-316 | 33 m³/h | **20285** | 1 | 11.5 | 0.132 |
| Ø 125 mm | AISI-316 | 43 m³/h | **20286** | 1 | 11.5 | 0.132 |
| Ø 140 mm | AISI-316 | 54 m³/h | **20287** | 1 | 11.5 | 0.132 |
| Ø 160 mm | AISI-316 | 70 m³/h | **20288** | 1 | 11.5 | 0.132 |
| Ø 200 mm | AISI-316 | 100 m³/h | **20289** | 1 | 11.5 | 0.132 |
| **Grille in ABS plastic with protection against UV rays.** | | | | | | |
| Ø 110 mm | Plastic | 33 m³/h | **28709** | 1 | 11.5 | 0.132 |
| Ø 125 mm | Plastic | 43 m³/h | **28710** | 1 | 11.5 | 0.132 |
| Ø 140 mm | Plastic | 54 m³/h | **28711** | 1 | 11.5 | 0.132 |
| Ø 160 mm | Plastic | 70 m³/h | **28712** | 1 | 11.5 | 0.132 |
| Ø 200 mm | Plastic | 100 m³/h | **28713** | 1 | 11.5 | 0.132 |

Maximum recommended flow rate in accordance with standard EN 13451-1.

## CONCRETE POOL - DRAIN ACCESSORIES



### Hydrostatic valve

To alleviate the pressure that can build up under the pool shell due to groundwater, it is recommended that a hydrostatic valve and a drainage pipe be fitted to the main drain. Hydrostatic valve to be fitted to the 2" bottom outlet on main drains. Made of white ABS, with stainless steel screw and spring. 1½" male thread.

| Code | Standard Pack | Standard Weight in kg | Standard Volume in m³ |
|---|---|---|---|
| **00277** | 4 | 1.0 | 0.003 |



### Drainage pipe

Drainage pipe with 1½" BSP thread connection for main drains with code numbers 01466, 27837 and 27839. Made of ABS.

| Code | Standard Pack | Standard Weight in kg | Standard Volume in m³ |
|---|---|---|---|
| **21581** | 24 | 3.54 | 0.021 |

+ info PDB
Further information on **PRODUCTS**
www.astralpool.com

# CONCRETE POOL - DRAIN GRILLES



## Flush-fit antivortex cover

Special flush-fit design that enables pool cleaners to go over it without blocking it up. Smooth slopes.

The 415 mm x 415 mm cover (25344) can be fitted to the following main drains:

| With stainless steel grille: | With plastic grille: |
|---|---|
| -20282 | -22359 |
| -20283 | -22360 |
| -20284 | -22361 |
| | -22362 |

The 570 mm x 570 mm cover (28556) can be fitted to the following main drains:

| With stainless steel grille: | With plastic grille: |
|---|---|
| -20285 | -28709 |
| -20286 | -28710 |
| -20287 | -28711 |
| -20288 | -28712 |

| | Code | Standard Pack | Standard Weight in kg | Standard Volume in $m^3$ |
|---|---|---|---|---|
| 415 mm x 415 mm, Height: 70 mm | **25344** | 1 | 2.25 | 0.012 |
| 570 mm x 570 mm, Height: 60 mm | **28556** | 1 | 4.00 | 0.032 |

Complies with Standard
**EN 13451-1-3**



## Ø 200 drain grille in ABS

Ring support and grille in white ABS. Supplied with grille fixing screws.

| Code | Standard Pack | Standard Weight in kg | Standard Volume in $m^3$ |
|---|---|---|---|
| **00280** | 10 | 3.0 | 0.031 |



## Ø 200 drain grille in stainless steel

Support ring in white plastic, grille in AISI-316 stainless steel. Supplied with grille fixing screws. Maximum recommended flow rate: 13 $m^3/h$.

| Code | Standard Pack | Standard Weight in kg | Standard Volume in $m^3$ |
|---|---|---|---|
| **00279** | 10 | 6.0 | 0.02 |

Complies with Standard
**EN 13451-1-3**

Complies with Standards
**EN 16582-1**
**EN 16713-2**

# CONCRETE POOL - DRAIN GRILLES



Complies with Standard **EN 13451-1-3**

Complies with Standards **EN 16582-1** **EN 16713-2**

## Ø 300 drain grille in stainless steel

Support ring in aluminium, grille in AISI-316 stainless steel. Supplied with grille fixing screws. Maximum recommended flow rate: 27 m³/h.

| Code | Standard Pack | Standard Weight in kg | Standard Volume in m³ |
|---|---|---|---|
| **00282** | 4 | 5.8 | 0.02 |



Complies with Standard **EN 13451-1-3**

Complies with Standards **EN 16582-1** **EN 16713-2**

## Drain grille in stainless steel

Designed for concrete pools. Support frame and grille in polished stainless steel. Supplied with fixing screws. Other sizes can be made to order.

| | | Code | Standard Pack | Standard Weight in kg | Standard Volume in m³ |
|---|---|---|---|---|---|
| **AISI-304** | | | | | |
| **Size (mm)** | **Max. recommended flow rate** | | | | |
| **200 x 200** | 15 m³/h (0.5 m/s) | **00284** | 1 | 1.2 | 0.01 |
| **300 x 300** | 43 m³/h (0.5 m/s) | **00285** | 1 | 2.2 | 0.01 |
| **400 x 400** | 83 m³/h (0.5 m/s) | **00286** | 1 | 4.0 | 0.03 |
| **500 x 500** | 136 m³/h (0.5 m/s) | **00287** | 1 | 4.5 | 0.04 |
| **AISI-316** | | | | | |
| **Size (mm)** | **Max. recommended flow rate** | | | | |
| **200 x 200** | 15 m³/h (0.5 m/s) | **30764** | 1 | 1.2 | 0.01 |
| **300 x 300** | 43 m³/h (0.5 m/s) | **30765** | 1 | 2.2 | 0.01 |
| **400 x 400** | 83 m³/h (0.5 m/s) | **30766** | 1 | 4.0 | 0.03 |
| **500 x 500** | 136 m³/h (0.5 m/s) | **30767** | 1 | 4.5 | 0.04 |

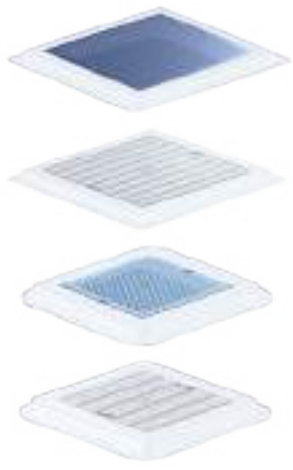

## Range of drain grilles

Available in stainless steel and plastic. Frames manufactured in polyester resin and fibreglass with a gelcoat finish. Possibility of fitting antivortex lids with code numbers 25344 and 28556 (see page 86).

| | Code | Standard Pack | Standard Weight in kg | Standard Volume in m³ |
|---|---|---|---|---|
| **Stainless steel drain grille** 490 mm x 490 mm | **28560** | 1 | 5.0 | 0.029 |
| **Plastic drain grille** 490 mm x 490 mm | **28561** | 1 | 4.7 | 0.029 |
| **Stainless steel drain grille** 345 mm x 345 mm | **28562** | 1 | 3.0 | 0.029 |
| **Plastic drain grille** 345 mm x 345 mm | **28563** | 1 | 2.9 | 0.029 |



## Drain grille for private pools

Range of drain grilles for use in private and public pools. Optional grilles in plastic or stainless steel. Frames made of plastic. Excellent finish.

| | Code | Standard Pack | Standard Weight in kg | Standard Volume in m³ |
|---|---|---|---|---|
| Plastic grille 252 x 252 mm. | **34331** | 1 | - | 0.0129 |
| Stainless steel grille 252 x 252 mm. | **34332** | 1 | - | 0.0129 |
| Plastic grille 410 x 410 mm. | **34333** | 1 | - | 0.0540 |
| Stainless steel grille 410 x 410 mm. | **34334** | 1 | - | 0.0540 |

+ info
Further information on **PRODUCTS**
**www.astralpool.com**

# CONCRETE POOL - ABS INLETS

**MULTIFLOW SYSTEM**
The inlet's eyeball is supplied pre-marked with a number of diameters (14–20 and 25). With the help of a punch (also supplied with the inlet) one of the diameters can be cut out at the time of installation.
Max. recommended flow rate for a max. flow of 4 m/s:
Ø 14 mm = 2.2 $m^3$/h, Ø 20 mm = 4.5 $m^3$/h, Ø 25 mm = 7 $m^3$/h






## NORM return inlets



Complies with Standard
**EN 13451-1-3**

Range of inlets suitable for installation in public and private pools. Manufactured in white ABS with UV treatment.

| | Code | Standard Pack | Standard Weight in kg | Standard Volume in $m^3$ |
|---|---|---|---|---|
| NORM return inlet for concrete pools | **56498** | 24 | 4.5 | 0.020 |

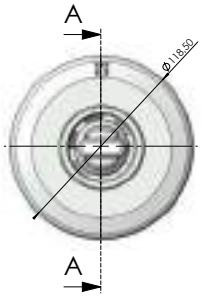


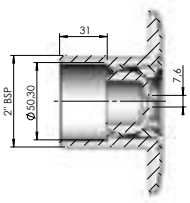

SECCIÓN A-A

## Multiflow return inlet to be glued



Complies with Standards
**EN 16582-1**
**EN 16713-2**

To be glued to a Ø 50 mm PN 10 pipe. Made of white ABS.

| | Code | Standard Pack | Standard Weight in kg | Standard Volume in $m^3$ |
|---|---|---|---|---|
| Standard inlet | **24413** | 40 | 4.0 | 0.020 |

# CONCRETE POOL - ABS INLETS



00295



00295CL090



00295CL129



00295CL144

Complies with Standards
**EN 16582-1**
**EN 16713-2**

## Threaded Multiflow return inlet

Outer 2" thread and Ø 50 mm inner wall to be glued. Made of white ABS. Recommended for installation with wall conduits: codes 15658 and 15659.

| | Code | Standard Pack | Standard Weight in kg | Standard Volume in m³ |
|---|---|---|---|---|
| White | **00295** | 24 | 4.35 | 0.020 |
| Beige | **00295CL090** | 24 | 4.35 | 0.020 |
| Light grey | **00295CL129** | 24 | 4.35 | 0.020 |
| Anthracite grey | **00295CL144** | 24 | 4.35 | 0.020 |



00298



00298CL090



00298CL129



00298CL144

Complies with Standards
**EN 16582-1**
**EN 16713-2**

## Multiflow return inlet to be glued

To be glued to Ø 63 mm PN 6 outer wall and Ø 50 mm inner wall. Made of white ABS. Recommended for installation with wall conduits: code numbers 15661 and 15660.

| | Code | Standard Pack | Standard Weight in kg | Standard Volume in m³ |
|---|---|---|---|---|
| White | **00298** | 24 | 4.24 | 0.020 |
| Beige | **00298CL090** | 24 | 4.24 | 0.020 |
| Light grey | **00298CL129** | 24 | 4.24 | 0.020 |
| Anthracite grey | **00298CL144** | 24 | 4.24 | 0.020 |



Complies with Standard
**13451-1-3**

Complies with Standards
**EN 16582-1**
**EN 16713-2**

## Return inlet/suction nozzle for high flow rates

Return inlet for large flow rates that can also be used as a suction nozzle. Maximum suction flow rate of 30m³/h for a maximum flow rate speed of 4 m/s. Maximum suction flow rate of 5 m³/h for a maximum flow rate speed of 0.5 m/s. PVC body. Connection for Ø 75 or Ø 90mm pipe. Inlets can be installed into bushing 43590 (see page 109). Grille can be adjusted in any direction.

| | Code | Standard Pack | Standard Weight in kg | Standard Volume in m³ |
|---|---|---|---|---|
| Return inlet/suction nozzle for large flows and concrete pools | **41520** | 16 | 4.20 | 0.021 |



Complies with Standards
**EN 16582-1**
**EN 16713-2**

## Inlet with Ø 20mm ball for gluing

Manufactured in white ABS. To be glued to a Ø 20mm PN 10 pipe.

| | Code | Standard Pack | Standard Weight in kg | Standard Volume in m³ |
|---|---|---|---|---|
| Standard inlet | **33501** | 50 | 2.9 | 0.020 |

+ info
Further information on **PRODUCTS**
www.astralpool.com

# CONCRETE POOL - ABS INLETS



Complies with Standard **13451-1-3**

Complies with Standards **EN 16582-1** **EN 16713-2**

## Return nozzle

In weatherproof, UV-resistant ABS. 3 adjustable positions. (100%, 65%, 35%). Maximum recommended flow rate compliant with standard EN 13451-1: 13.5 m³/h. Connection: outer Ø 63 mm wall.

| Code | Standard Pack | Standard Weight in kg | Standard Volume in m³ |
|---|---|---|---|
| **15863** | 24 | 3.4 | 0.020 |



**00303**



**00303CL090**



**00303CL129**



**00303CL144**

Complies with Standard **13451-1-3**

Complies with Standards **EN 16582-1** **EN 16713-2**

## Pool floor return inlet

All-in-one return inlet and suction nozzle. Adjustable flow rate. Made of ABS plastic and screws in stainless steel. Maximum recommended flow rate compliant with standard EN 13451-1: 12 m³/h.

| | Code | Standard Pack | Standard Weight in kg | Standard Volume in m³ |
|---|---|---|---|---|
| **Outer 2" thread, int. Ø 50 mm** | | | | |
| White | **00303** | 24 | 5.0 | 0.020 |
| Beige | **00303CL090** | 24 | 5.0 | 0.020 |
| Light grey | **00303CL129** | 24 | 5.0 | 0.020 |
| Anthracite grey | **00303CL144** | 24 | 5.0 | 0.020 |
| To glue onto Ø 63 mm PN 6, inner Ø 50 mm | **20140** | 20 | 4.4 | 0.021 |



## 3" adjustable pool floor return inlet

Made of white ABS plastic. Suction. Flow rate adjusted by turning the grille. Suction surface area: 0.015 m². Outer Ø 295 mm wall. Flow rate (0.4 m/s) 20 m³/h. Max. recommended flow rate compliant with standard EN 13451-1: 26 m³/h (0.5 m/s.).

| | Code | Standard Pack | Standard Weight in kg | Standard Volume in m³ |
|---|---|---|---|---|
| Grille in AISI-304 stainless steel | **08317** | 2 | 2.65 | 0.047 |
| Grille in white ABS | **11796** | 2 | 2.65 | 0.047 |

## CONCRETE POOL - ABS INLETS

### Pool floor return inlet with swivel joint



22353



22353CL090



22353CL129



22353CL144

Complies with Standard **13451-1-3**

Complies with Standards **EN 16582-1** **EN 16713-2**

Swivel body in PVC. Cover in ABS. Adjuster screw in POM. Maximum flow rate of 10 m³/h. Fits to Ø 75 mm piping and wall conduit with code number 21248.

| | Code | Standard Pack | Standard Weight in kg | Standard Volume in m³ |
|---|---|---|---|---|
| Pool floor inlet - White | **22353** | 24 | 4.1 | 0.022 |
| Pool floor inlet - Beige | **22353CL090** | 24 | 4.1 | 0.022 |
| Pool floor inlet - Light grey | **22353CL129** | 24 | 4.1 | 0.022 |
| Pool floor inlet - Anthracite grey | **22353CL144** | 24 | 4.1 | 0.022 |

### Wall conduit for pool floor return inlet with swivel joint (Net'n'Clean reduction piping)



Diameter of the piping adjusted to glue in inlet 22353. Connection to piping for Ø 50 mm inner wall and Ø 63 mm outer wall.

| Code | Standard Pack | Standard Weight in kg | Standard Volume in m³ |
|---|---|---|---|
| **21248** | 12 | 7.3 | 0.032 |

### Suction nozzle



00300



00300CL090



00300CL129



00300CL144

Complies with Standard **13451-1-3**

Complies with Standards **EN 16582-1** **EN 16713-2**

To be glued to Ø 63 mm and Ø 50 mm piping. Maximum pressure: 6 bar. Made of white ABS. 1½" thread. Recommended for installation with wall conduits: code numbers 15661 and 15660.

| | Code | Standard Pack | Standard Weight in kg | Standard Volume in m³ |
|---|---|---|---|---|
| Standard inlet - White | **00300** | 24 | 3.62 | 0.020 |
| Standard inlet - Beige | **00300CL090** | 24 | 3.62 | 0.020 |
| Standard inlet - Light grey | **00300CL129** | 24 | 3.62 | 0.020 |
| Standard inlet - Anthrachite gray | **00300CL144** | 24 | 3.62 | 0.020 |

### Suction nozzle



Complies with Standard **13451-1-3**

Complies with Standards **EN 16582-1** **EN 16713-2**

Outer 2" thread, Ø 50 mm inner wall. Maximum pressure: 6 bar. Made of white ABS with 1½" threaded plug. Recommended for installation with wall conduits (codes 15658 and 15659).

| | Code | Standard Pack | Standard Weight in kg | Standard Volume in m³ |
|---|---|---|---|---|
| Standard inlet - White | **00301** | 24 | 3.8 | 0.020 |

+ info
Further information on **PRODUCTS**
www.astralpool.com

# CONCRETE POOL - ABS INLETS



24415

## Suction nozzle

To be glued to a Ø 50 PN 10 pipe. Made of white ABS with 1½" threaded plug. For end connector 07958 and push fit connector 01393. Recommended for installation with wall conduits (codes 15658 and 15659).

| | Code | Standard Pack | Standard Weight in kg | Standard Volume in m³ |
|---|---|---|---|---|
| Suction nozzle - White | **24415** | 50 | 3.72 | 0.02 |

Complies with Standard **13451-1-3**

Complies with Standards **EN 16582-1** **EN 16713-2**

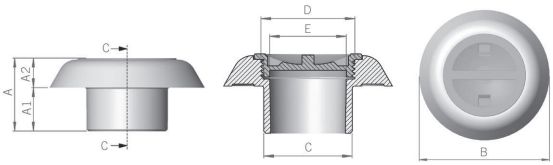




## Suction inlet

To be glued to a Ø 63 mm pipe. Body and grille in ABS plastic, screws in stainless steel. Its characteristics make this nozzle particularly suitable for overflow channels. Maximum flow rate: 7 m³/h.

| Code | Standard Pack | Standard Weight in kg | Standard Volume in m³ |
|---|---|---|---|
| **00302** | 12 | 3.1 | 0.016 |



## Hydromassage kit

Made up of a return inlet and wall conduit fitted with an air inlet and a venturi. Two wall conduit lengths available. Ø 50 mm water connection pipe and Ø 20 mm air suction pipe.

| | Code | Standard Pack | Standard Weight in kg | Standard Volume in m³ |
|---|---|---|---|---|
| **Hydromassage kit for concrete pools:** | | | | |
| Length of wall conduit 190 mm | **32113** | 12 | 3.5 | 0.021 |
| Length of wall conduit 280 mm | **32370** | 12 | 3.6 | 0.021 |
| **Hydromassage kit for concrete pools with a liner:** | | | | |
| Length of wall conduit 190 mm | **31443** | 12 | 3.5 | 0.021 |
| Length of wall conduit 275 mm | **32371** | 8 | 3.5 | 0.021 |

## CONCRETE POOL - STAINLESS STEEL INLETS



Complies with Standards
**EN 16582-1**
**EN 16713-2**

### Return inlet with Ø 20 mm ball

1 ½" external thread. Manufactured in AISI-316 stainless steel. Maximum recommended flow of 4.5 m³/hour according to EN 16582-1 and EN 16713-2 standards if installed at a maximum of 500 mm below pool water level. Ø 20mm ball.

| | Code | Standard Pack | Standard Weight in kg | Standard Volume in m³ |
|---|---|---|---|---|
| Length 35 mm | **32994** | 1 | 0.3 | 0.001 |
| Length 50 mm | **16325** | 1 | 0.3 | 0.001 |
| Length 70 mm | **16326** | 1 | 0.5 | 0.001 |



Complies with Standard
**EN 13451-1-3**

Complies with Standards
**EN 16582-1**
**EN 16713-2**

### Return inlet with Ø 25 mm ball

1 ½" external thread. Manufactured in AISI-316 stainless steel. Maximum recommended flow according to EN 13451-3 standard: 7 m³/h. Ø 25 mm ball.

| | Code | Standard Pack | Standard Weight in kg | Standard Volume in m³ |
|---|---|---|---|---|
| Length 35 mm | **69874** | 1 | 0.3 | 0.001 |
| Length 50 mm | **69875** | 1 | 0.3 | 0.001 |
| Length 70 mm | **69876** | 1 | 0.5 | 0.001 |



Complies with Standard
**EN 13451-1-3**

Complies with Standards
**EN 16582-1**
**EN 16713-2**

### Adjustable pool floor return inlet

2" external thread. Made of AISI-316 stainless steel. Can be fitted in concrete and prefabricated pools. The water flow can be adjusted by loosening or tightening the central screw. Max. recommended flow rate complaint with standard EN 13451-3: 14 m³/h.

| | Code | Standard Pack | Standard Weight in kg | Standard Volume in m³ |
|---|---|---|---|---|
| | **15839** | 1 | 0.9 | 0.002 |



Complies with Standard
**EN 13451-1-3**

Complies with Standards
**EN 16582-1**
**EN 16713-2**

### Suction nozzle

1 ½" external thread. Manufactured in AISI-316 stainless steel. Push-fit connection 05684 required (see page 233).

| | Code | Standard Pack | Standard Weight in kg | Standard Volume in m³ |
|---|---|---|---|---|
| Length 50 mm | **16328** | 1 | 0.2 | 0.001 |
| Length with cover: 50 mm | **21644** | 1 | 0.3 | 0.001 |

+ info
PDB
Further information on **PRODUCTS**
www.astralpool.com

# CONCRETE POOL - STAINLESS STEEL INLETS



Complies with Standard **EN 13451-1-3**
Complies with Standards **EN 16582-1** **EN 16713-2**

## Adjustable return inlet

Manufactured in chrome-plated brass. Grille in AISI-316 stainless steel.

| | Code | Standard Pack | Standard Weight in kg | Standard Volume in m³ |
|---|---|---|---|---|
| Max. flow rate: 21 m³/h 2" inner thread | **00312** | 12 | 7.0 | 0.013 |
| Max. flow rate: 40 m³/h 3" inner thread | **00313** | 6 | 10.0 | 0.014 |



Complies with Standard **EN 13451-1-3**
Complies with Standards **EN 16582-1** **EN 16713-2**

## Suction nozzle with sliding cover

Manufactured in chrome-plated brass. Faceplate in AISI-304 stainless steel. Pressure connection, 2" internal thread. Sleeve 01392 is needed (see page 233) couples to hose

| Code | Standard Pack | Standard Weight in kg | Standard Volume in m³ |
|---|---|---|---|
| **00315** | 12 | 8.0 | 0.008 |



Complies with Standard **EN 13451-1-3**
Complies with Standards **EN 16582-1** **EN 16713-2**

## Suction nozzle with threaded cover

Made of chrome plated brass. Screws into 2" inner thread (01395 coupling is required for hose).

| Code | Standard Pack | Standard Weight in kg | Standard Volume in m³ |
|---|---|---|---|
| **00317** | 12 | 10.0 | 0.012 |

Range of 300 mm long conduits for Ø 2" inlets and Multiflow that can be cut to different lengths, depending on the thickness of the pool wall. Made of ABS. The ribs of the end plates have holes for fitting the wall conduit to the pool structure, which makes assembly straightforward.



## Wall conduit in ABS

| | Code | Standard Pack | Standard Weight in kg | Standard Volume in m³ |
|---|---|---|---|---|
| **Wall conduit with 2" rear male thread and Ø 50 mm smooth inner wall** | | | | |
| 2" front female thread nozzles with 2" male thread | **15658** | 15 | 4.3 | 0.040 |
| Smooth Ø 59.3 mm front connection for nozzles to be glued to Ø 63 mm piping, 6-bar piping and MINI projector (code 33684) | **15661** | 15 | 4.2 | 0.040 |
| **Wall conduit with smooth Ø 63 mm rear connection and smooth Ø 50 mm inner wall** | | | | |
| 2" front female thread nozzles with 2" male thread | **15659** | 15 | 4.2 | 0.040 |
| Smooth Ø 59.3 mm front connection for nozzles to be glued to Ø 63 mm piping, 6-bar piping and MINI projector (code 33684) | **15660** | 15 | 5.6 | 0.040 |

## CONCRETE POOL - WALL BUSHINGS



### Wall conduits in PVC

Grey PVC.

| | Code | Standard Pack | Standard Weight in kg | Standard Volume in m³ |
|---|---|---|---|---|
| **150 mm long**<br>2" outer thread + Ø 50 mm inner, 2" inner thread | **00322** | 40 | 3.0 | 0.011 |
| **300 mm long**<br>2" female and male thread connection | **00323** | 20 | 3.0 | 0.011 |
| 2" rear male thread pipe connection or smooth inner wall for MINI projector (33684) | **00324** | 20 | 3.0 | 0.011 |
| 2" outer thread + Ø 50 mm inner, 1½" inner thread | **00325** | 20 | 3.0 | 0.011 |
| 2" outer thread + Ø 50 mm inner wall. Ø 50 mm inner wall specially for nozzles with code numbers 00289, 07957, 00304, 00305 and 00306. | **00326** | 20 | 3.0 | 0.011 |



### Stainless steel wall conduits

In AISI-304 stainless steel. Both ends with 1½" inner thread. With earth connection.

| | Code | Standard Pack | Standard Weight in kg | Standard Volume in m³ |
|---|---|---|---|---|
| Length 240 mm | **00327** | 1 | 0.7 | 0.003 |
| Length 340 mm | **00328** | 1 | 0.8 | 0.005 |

## CONCRETE POOL - WINTER ACCESSORIES



### Winter plugs

For covering inlets and protecting them from freezing.

| | Code | Standard Pack | Standard Weight in kg | Standard Volume in m³ |
|---|---|---|---|---|
| For 1½" inlets | **53849** | - | - | - |
| For 2" inlets | **06212** | - | - | - |

**Choice of cover colours for skimmers**

## LINER AND PREFABRICATED POOL - 15L SKIMMERS

All of the components that are exposed in this range of skimmers come with a UV treatment. Made of white ABS, they come with a weir flap and a flow regulator check valve. Bottom suction nozzle connection: 1½" inner thread, 2" outer thread. Simultaneous connection to the main drain: Ø 50 mm inner wall. Overflow connection: Ø 40 mm. Leaf trap. Recommended flow rate: 7.5 $m^3$/h. It is recommended that one skimmer be installed for every 25 $m^2$ of water surface area. All skimmers come in two different models: the model with inserts and the PARKER model, which is supplied with self-tapping screws.



### Skimmer with standard mouth opening

Supplied with adhesive gasket, bi-injection moulded frame, flange and screws.

| | Code | Standard Pack | Standard Weight in kg | Standard Volume in $m^3$ |
|---|---|---|---|---|
| **Comes with round snap-on cover** | | | | |
| White | **01461** | 1 | 4.0 | 0.059 |
| **Comes with square snap-on cover** | | | | |
| White | **01462** | 1 | 4.2 | 0.059 |

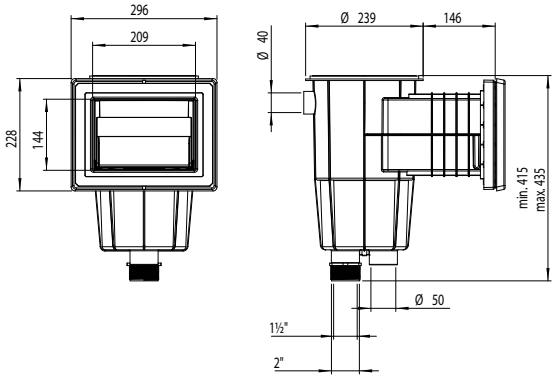


Complies with Standards
**EN 16582-1**
**EN 16713-2**



**34413**



**34413CL090**



**34413CL129**



**34413CL144**

### Skimmer with wide mouth opening

Supplied with adhesive gaskets, flange and screws.

| | Code | Standard Pack | Standard Weight in kg | Standard Volume in $m^3$ |
|---|---|---|---|---|
| **Round cover** | | | | |
| White | **01463** | 1 | 5.28 | 0.12 |
| **Square cover, complete embellisher** | | | | |
| White | **34413** | 1 | 5.04 | 0.12 |
| Beige | **34413CL090** | 1 | 5.04 | 0.12 |
| Light Grey | **34413CL129** | 1 | 5.04 | 0.12 |
| Anthracite Grey | **34413CL144** | 1 | 5.04 | 0.12 |
| **Square cover** | | | | |
| White | **01464** | 1 | 5.28 | 0.12 |

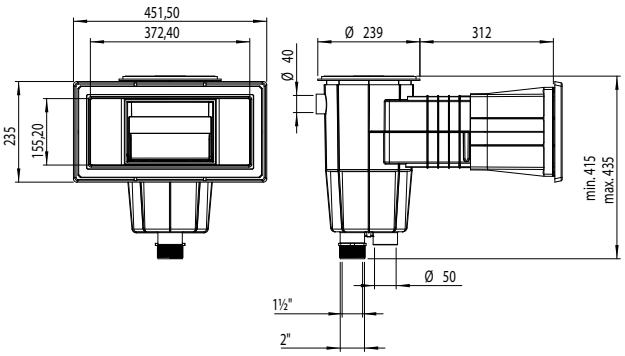


Complies with Standards
**EN 16582-1**

# LINER AND PREFABRICATED POOL - 15L SKIMMERS



## Double gasket kits for skimmers

Kits made up of a double gasket and the screws necessary for the installation of skimmers in panel pools. Made of TPE, the kit enables the installation of various accessories in pool shells and protects the panelling from coming into contact with water. Easy to install. Prevents corrosion of the panelling in the area that has been die cut.

| | Code | Standard Pack | Standard Weight in kg | Standard Volume in $m^3$ |
|---|---|---|---|---|
| Inserts for wide openings | **14516-0500** | 40 | - | 0.070 |
| Self-tapping screws for wide openings | **14516-0600** | 40 | - | 0.070 |
| Inserts for standard openings | **27124-0500** | 80 | - | 0.035 |
| Self-tapping screws for standard openings | **27124-0600** | 80 | - | 0.035 |
| Inserts for Norm openings | **57289-0500** | - | - | - |
| Self-tapping screws for Norm openings | **57289-0600** | - | - | - |



## Panel Protect skimmer inside assembly

Supplied with adhesive gaskets, flange and screws. Skimmers specially designed for panel pools. The wide opening assembly should be fitted to the panel from the inside. Supplied with glue.

| | Code | Standard Pack | Standard Weight in kg | Standard Volume in $m^3$ |
|---|---|---|---|---|
| 15 l Panel Protect skimmer wide opening, round cover | **32372** | 1 | 4.47 | 0.116 |
| 15 l Panel Protect skimmer wide opening, square cover | **30866** | 1 | 5.13 | 0.116 |
| Glue for ABS | **30884** | 1 | 0.20 | 0.001 |

Complies with Standards
**EN 16582-1**



## Coupling kit for stainless steel skimmers

For liner, prefabricated and panel pools. Includes: 2 elastic gaskets, AISI-316 stainless steel frame and screws for assembling.

| | Code | Standard Pack | Standard Weight in kg | Standard Volume in $m^3$ |
|---|---|---|---|---|
| For A-100, A-201 and A-202 skimmers (00254. 07520 and 07610) | **07525** | 1 | 0.78 | 0.002 |
| For A-400 skimmer (code 07523) | **07526** | 1 | 1.13 | 0.01 |

Complies with Standards
**EN 16582-1**
**EN 16713-2**

+ info PDB
Further information on **PRODUCTS**
www.astralpool.com

# LINER AND PREFABRICATED POOL - 17.5L SKIMMERS

All of the components that are exposed in this range of skimmers come with a UV treatment. Made of white ABS, they come with a weir flap and a flow regulator check valve. Bottom suction nozzle connection: 1½" inner thread, 2" outer thread. Simultaneous connection to the main drain: Ø 50 mm inner wall. Overflow connection: Ø 40 mm. Leaf trap. Recommended flow rate: 7.5 m³/h. It is recommended that one skimmer be installed for every 25 m² of water surface area. All skimmers come in two different models: the model with inserts and the PARKER model, which is supplied with self-tapping screws.





Complies with Standards
**EN 16582-1**

## Skimmer SPS 250

Range of 17L skimmers suitable for installation in residential pools. The short length of 250 mm makes them ideal for installation in pools made from expanded polystyrene blocks. Their configuration also takes the water level up to the edge of the coping stone. Manufactured in white ABS with UV protection, the SPS 250 comes with a weir flap, flow regulator and basket. Recommended flow rate of 7.5 m³/h. Install one skimmer every 25 m² of water line surface area. Connections under Ø 63mm and 2", water overflow connection of Ø 32 mm.

| | Code | Standard Pack | Standard Weight in kg | Standard Volume in m³ |
|---|---|---|---|---|
| Skimmer with inserts | **58382** | 1 | 3.50 | 0.037 |
| Skimmer without inserts | **58609** △ | 1 | 3.50 | 0.037 |

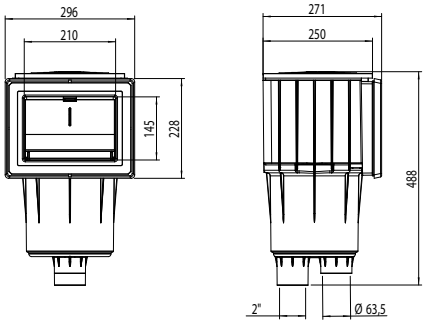


## NORM skimmer

17.5L skimmer range suitable for installation in public and private pools. Manufactured in white ABS with UV treatment, it comes with a weir flap, flow regulator, lid height regulation and basket. The water inlet is 495 x 80 mm. Recommended flow rate of 7.5 m³/h. Install one skimmer every 25 m² of water line surface area. Connections under 1 ½" and 2", water overflow connection of Ø 40 mm.



**56176**



**56176CL090**



**56176CL129**



**56176CL144**

| | Code | Standard Pack | Standard Weight in kg | Standard Volume in m³ |
|---|---|---|---|---|
| **For prefabricated pools with inserts** | | | | |
| White | **56176** | 1 | 5.61 | 0.182 |
| Beige | **56176CL090** | 1 | 5.61 | 0.182 |
| Light grey | **56176CL129** | 1 | 5.61 | 0.182 |
| Anthracite grey | **56176CL144** | 1 | 5.61 | 0.182 |
| **For prefabricated pools without inserts** | | | | |
| White | **56299** | 1 | 5.61 | 0.182 |
| Beige | **56299CL090** | 1 | 5.61 | 0.182 |
| Light grey | **56299CL129** | 1 | 5.61 | 0.182 |
| Anthracite grey | **56299CL144** | 1 | 5.61 | 0.182 |

Complies with Standards
**EN-13451-1-3**

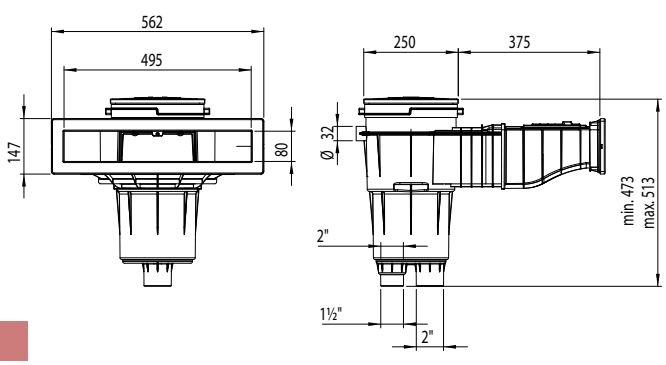


△ Until end of stocks

## LINER AND PREFABRICATED POOL - 17.5L SKIMMERS



### Skimmer with standard mouth opening

Supplied with adhesive gaskets, flange and screws.

| | Code | Standard Pack | Standard Weight in kg | Standard Volume in m³ |
|---|---|---|---|---|
| With standard round cover | **05284** ▲ | 1 | 5.30 | 0.062 |
| With square cover - White | **11309** | 1 | 5.30 | 0.062 |
| With square cover - Beige | **11309CL090** | 1 | 5.30 | 0.062 |
| With square cover - Light grey | **11309CL129** | 1 | 5.30 | 0.062 |
| With square cover - Anthracite grey | **11309CL144** | 1 | 5.30 | 0.062 |
| With a square cover for PARKER models | **11315** | 1 | 5.30 | 0.062 |



**11309CL090**



**11309CL129**



**11309CL144**

Complies with Standards
**EN 16582-1**

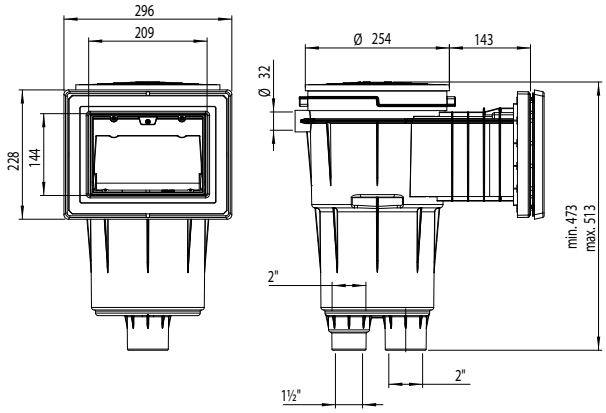


* While stocks last



### Skimmer with standard opening and extended throat

Supplied with adhesive gaskets, flange and screws.

| | Code | Standard Pack | Standard Weight in kg | Standard Volume in m³ |
|---|---|---|---|---|
| With round cover | **05285** ▲ | 1 | 5.90 | 0.077 |
| **With square cover** | | | | |
| White | **11310** | 1 | 5.90 | 0.077 |
| Beige | **11310CL090** | 1 | 5.90 | 0.077 |
| Light grey | **11310CL129** | 1 | 5.90 | 0.077 |
| Anthracite grey | **11310CL144** | 1 | 5.90 | 0.077 |
| **With square cover for PARKER models** | | | | |
| White | **11316** | 1 | 5.90 | 0.077 |
| Beige | **11316CL090** | 1 | 5.90 | 0.077 |
| Light grey | **11316CL129** | 1 | 5.90 | 0.077 |
| Anthracite grey | **11316CL144** | 1 | 5.90 | 0.077 |



**11310CL090**



**11310CL129**



**11310CL144**

Complies with Standards
**EN 16582-1**

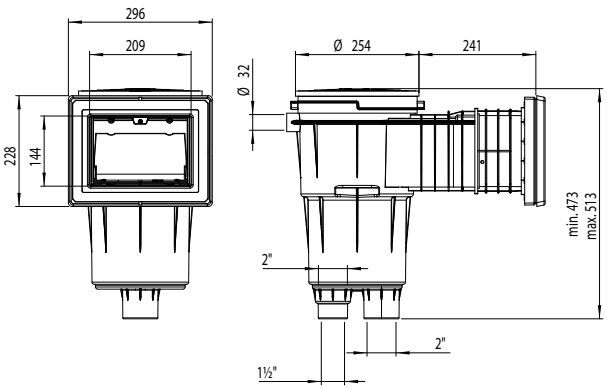


▲ Until end of stocks

+ info PDB
Further information on **PRODUCTS**
www.astralpool.com

# LINER AND PREFABRICATED POOL - 17.5L SKIMMERS

## Skimmer with wide mouth opening



Supplied with adhesive gaskets, flange and screws.

| | Code | Standard Pack | Standard Weight in kg | Standard Volume in m³ |
|---|---|---|---|---|
| With standard round cover | **05286** △ | 1 | 6.50 | 0.135 |
| With square cover - White | **11311** | 1 | 6.52 | 0.135 |
| With square cover - Beige | **11311CL090** | 1 | 6.52 | 0.135 |
| With square cover - Light grey | **11311CL129** | 1 | 6.52 | 0.135 |
| With square cover - Anthracite grey | **11311CL144** | 1 | 6.52 | 0.135 |
| With square cover for PARKER models - White | **11317** | 1 | 6.52 | 0.135 |
| With square cover for PARKER models - Beige | **11317CL090** | 1 | 6.52 | 0.135 |
| With square cover for PARKER models - Light grey | **11317CL129** | 1 | 6.52 | 0.135 |
| With square cover for PARKER models - Anthracite grey | **11317CL144** | 1 | 6.52 | 0.135 |



**11311CL090**



**11311CL129**



**11311CL144**

Complies with Standards
**EN 16582-1**

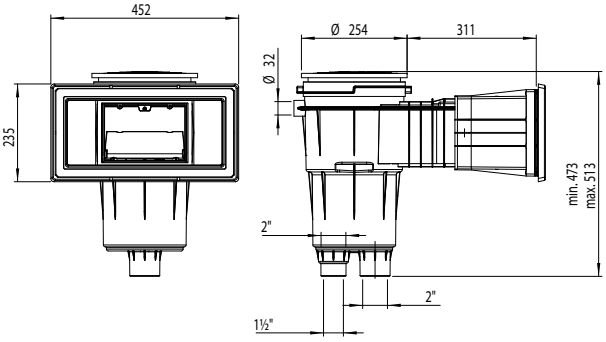


## Skimmer with wide opening and extended throat

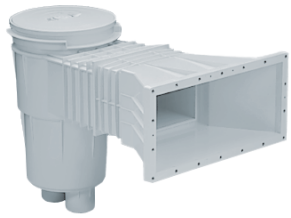

Supplied with adhesive gaskets, flange and screws.

| | Code | Standard Pack | Standard Weight in kg | Standard Volume in m³ |
|---|---|---|---|---|
| Round cover | **07830** △ | 1 | 7.08 | 0.161 |
| Square cover | **11313** | 1 | 7.00 | 0.161 |
| Square cover for PARKER models | **11314** | 1 | 7.00 | 0.161 |

Complies with Standards
**EN 16582-1**

## Panel Protect skimmer inside assembly



Skimmers for panel pools. The wide opening assembly should be fitted to the panel from the inside. Supplied with glue.

| | Code | Standard Pack | Standard Weight in kg | Standard Volume in m³ |
|---|---|---|---|---|
| 17.5 l Panel Protect skimmer wide opening, round cover | **32373** △ | 1 | 6.20 | 0.137 |
| 17.5 l Panel Protect skimmer wide opening, square cover | **30867** | 1 | 6.20 | 0.116 |
| Glue for ABS | **30884** | 25 | 5.05 | 0.129 |

Complies with Standards
**EN 16582-1**

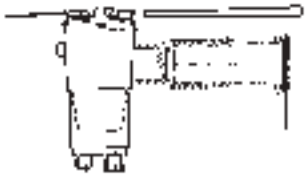

The 17.5 litre skimmer can be made to order with much larger throat extensions than the standard size. This can be particularly useful if wider coping stones than usual are installed.

△ Until end of stocks

## PREFABRICATED LINER POOLS - SKIMMER ACCESSORIES



00249-0600CL090



00249-0600CL129



00249-0600CL144



00249-0700CL090

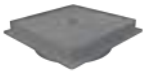

00249-0700CL129



00249-0700CL144

### Covers for 15 l skimmers

| | Code | Standard Pack | Standard Weight in kg | Standard Volume in m³ |
|---|---|---|---|---|
| **Round cover, round face plate** | | | | |
| Beige | **00249-0600CL090** | 23units | 7.9 | 0.069 |
| Light grey | **00249-0600CL129** | 23units | 7.9 | 0.069 |
| Anthracite grey | **00249-0600CL144** | 23units | 7.9 | 0.069 |
| **Round cover, square face plate** | | | | |
| Beige | **00249-0700CL090** | 13units | 6.9 | 0.069 |
| Light grey | **00249-0700CL129** | 13units | 6.9 | 0.069 |
| Anthracite grey | **00249-0700CL144** | 13units | 6.9 | 0.069 |



05280-0600CL090



05280-0600CL129



05280-0600CL144



05280-0700CL090

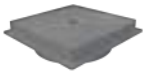

05280-0700CL129



05280-0700CL144

### Covers for 17.5 l skimmers

| | Code | Standard Pack | Standard Weight in kg | Standard Volume in m³ |
|---|---|---|---|---|
| **Round cover, round face plate** | | | | |
| Beige | **05280-0600CL090** | 15units | 8 | 0.069 |
| Light grey | **05280-0600CL129** | 15units | 8 | 0.069 |
| Anthracite grey | **05280-0600CL144** | 15units | 8 | 0.069 |
| **Round cover, square face plate** | | | | |
| Beige | **05280-0700CL090** | 15units | 8 | 0.069 |
| Light grey | **05280-0700CL129** | 15units | 8 | 0.069 |
| Anthracite grey | **05280-0700CL144** | 15units | 8 | 0.069 |

+ info
Further information on **PRODUCTS**
**www.astralpool.com**

# LINER AND PREFABRICATED POOL - DRAINS

All main drains in the range are supplied with UV protection.
To prevent the risk of suction, install the main drains according to local regulations.

Recommended use:

- Maximum suction rate of 0.5 m/s.
- Install at least 2 main drains, each with a suction capacity able to handle the pool's full flow rate.



**56380**



**56382CL090**



**56382**



**56382CL144**



**56382CL129**

Complies with Standard **EN 13451-1-3**

Complies with Standards **EN 16582-1** **EN 16713-2**

## NORM main drain

New range of main drains suitable for installation in public and private pools. Supplied with flat or antivortex grilles. Manufactured in white ABS with UV treatment, fitted with a 2" side outlet and a 1 ½" bottom outlet connection, bottom outlet covered by semi-die cut tab.

| | Code | Standard Pack | Standard Weight in kg | Standard Volume in m³ |
|---|---|---|---|---|
| **Flat grating with inserts** | | | | |
| White | **56380** | 4 | 10.60 | 0.069 |
| Beige | **56380CL090** | 4 | 10.60 | 0.069 |
| Light grey | **56380CL129** | 4 | 10.60 | 0.069 |
| Anthracite grey | **56380CL144** | 4 | 10.60 | 0.069 |
| **Flat grating without inserts** | | | | |
| White | **56381** | 4 | 10.60 | 0.069 |
| Beige | **56381CL090** | 4 | 10.60 | 0.069 |
| Light grey | **56381CL129** | 4 | 10.60 | 0.069 |
| Anthracite grey | **56381CL144** | 4 | 10.60 | 0.069 |
| **Antivortex grating with inserts** | | | | |
| White | **56382** | 4 | 10.60 | 0.069 |
| Beige | **56382CL090** | 4 | 10.60 | 0.069 |
| Light grey | **56382CL129** | 4 | 10.60 | 0.069 |
| Anthracite grey | **56382CL144** | 4 | 10.60 | 0.069 |
| **Antivortex grating without inserts** | | | | |
| White | **56383** | 4 | 10.60 | 0.069 |
| Beige | **56383CL090** | 4 | 10.60 | 0.069 |
| Light grey | **56383CL129** | 4 | 10.60 | 0.069 |
| Anthracite grey | **56383CL144** | 4 | 10.60 | 0.069 |



## Mini main drain

Side outlet drain assembly with 2" inner thread. Made of white ABS with grille fixed to flange. Suction velocity at grille of 0.5 m/s and flow rate of 11 m³/h. The slots in the grille are no larger than 8 mm, in compliance with regulations. M5 screws and brass inserts for fastening the flange and grille. Can be used in concrete spas and side suction inlets.

| | Code | Standard Pack | Standard Weight in kg | Standard Volume in m³ |
|---|---|---|---|---|
| Mini main drain - White | **27814** | 4 | 2.64 | 0.013 |



## Ø 290 mm main drain for liner pools. PARKER model

2" side outlet and 1½" bottom outlet. Specially for liner pools. Built completely in white ABS. Comes with screws in stainless steel and synthetic adhesive gaskets. Side outlet for plug for testing water tightness. Bottom outlet for plug for fitting a hydrostatic valve code 00277 (see page 85) and drainge tube code 21581 (see page 85). Suction speed of 0.5 m/s. Maximum recommended flow rate: 13 m³/h. Fitted flush to pool floor for total drainage.

| | Code | Standard Pack | Standard Weight in kg | Standard Volume in m³ |
|---|---|---|---|---|
| | **00270** | 4 | 5.71 | 0.044 |
| Parker model (with self-tapping screws) | **07880** | 4 | 5.71 | 0.044 |

## LINER AND PREFABRICATED POOL - DRAINS



### Round Ø 200 mm main drain with antivortex grille

Made of white ABS. 2" side outlet and 1½" bottom outlet. Bottom outlet covered by a semi-die cut tab, which may be removed if necessary. A drainage pipe (code drainage code 21581, see page 85). Max. flow rate: 13 m³/h.

| Code | Standard Pack | Standard Weight in kg | Standard Volume in m³ |
|---|---|---|---|
| **27125** | 4 | 3.543 | 0.033 |



### Round Ø 200 mm main drain with flat grille

Made of white ABS. 2" side outlet and 1½" bottom outlet. Bottom outlet covered by a semi-die cut tab, which may be removed if necessary. A drainage pipe (code drainage code 21581, see page 85). Max. flow rate: 13 m³/h.

| Code | Standard Pack | Standard Weight in kg | Standard Volume in m³ |
|---|---|---|---|
| **27838** | 4 | 3.391 | 0.033 |



**00271**



**00271CL090**



**00271CL129**



**00271CL144**

### Ø 210 mm main drain with ABS grille

2" side outlet. Body and grille in ABS. Comes with self-adhesive gaskets, flange and screws. Maximum recommended flow rate: 13 m³/h.

| | Code | Standard Pack | Standard Weight in kg | Standard Volume in m³ |
|---|---|---|---|---|
| **Ø 210 mm main drain with ABS grille** | | | | |
| White | **00271** | 4 | 4.0 | 0.033 |
| Beige | **00271CL090** | 4 | 4.0 | 0.033 |
| Light grey | **00271CL129** | 4 | 4.0 | 0.033 |
| Anthracite grey | **00271CL144** | 4 | 4.0 | 0.033 |
| **Ø 210 mm main drain with ABS grille, Parker** | | | | |
| White | **06474** | 4 | 4.0 | 0.033 |
| Beige | **06474CL090** | 4 | 4.0 | 0.033 |
| Light grey | **06474CL129** | 4 | 4.0 | 0.033 |
| Anthracite grey | **06474CL144** | 4 | 4.0 | 0.033 |



### Square 210 mm x 210 mm main drain with ABS grille.

With 2" side outlet. Body and grille in ABS. Comes with self-adhesive gaskets, flange and screws. Maximum recommended flow rate: 13 m³/h.

| Code | Standard Pack | Standard Weight in kg | Standard Volume in m³ |
|---|---|---|---|
| **00273** | 4 | 5.5 | 0.043 |



### Drainage outlet in grille made of stainless steel.

Inner Ø 50 mm wall and outer Ø 63 mm wall. Body in white ABS and grille in stainless steel. Supplied with self-adhesive gaskets, flanges and screws. Maximum recommended flow rate: 7 m³/h.

| Code | Standard Pack | Standard Weight in kg | Standard Volume in m³ |
|---|---|---|---|
| **00274** | 4 | 4.0 | 0.023 |

+ info
Further information on **PRODUCTS**
**www.astralpool.com**

# LINER AND PREFABRICATED POOL - DRAINS



## Round main drain in stainless steel

2" side outlet. Made of AISI-316 stainless steel. Grille fitted using screws. Comes with gaskets, flange and screws. Maximum recommended flow rate: 13 m³/h.

| | Code | Standard Pack | Standard Weight in kg | Standard Volume in m³ |
|---|---|---|---|---|
| 2" side outlet" | **00275** | 1 | 2.27 | 0.02 |
| 2" side outlet and 1½" bottom outlet connections. | **26197** | 1 | 4.23 | 0.04 |

Complies with Standard **EN 13451-1-3**

Complies with Standards **EN 16582-1** **EN 16713-2**

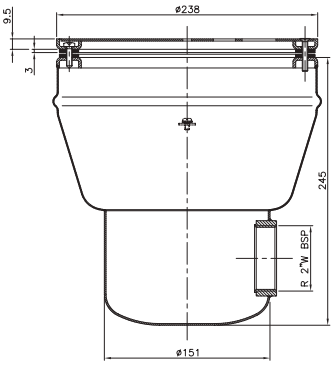




## Adaptor kit for main drain

For drains 00269 and 08463. Comes with gaskets, flange and screws. Flange in AISI-316 stainless steel.

| Code | Standard Pack | Standard Weight in kg | Standard Volume in m³ |
|---|---|---|---|
| **00276** | 40 | 9.7 | 0.01 |



## NORM main drain in polyester and fibreglass - 355 mm x 355 mm

Range of main drains manufactured in polyester resin and fibreglass. Grille in stainless steel or plastic. Optional hydrostatic valve.

Grille in stainless steel

| Outlet connection to be glued | Grille | Flow rate | Code | Standard Pack | Standard Weight in kg | Standard Volume in m³ |
|---|---|---|---|---|---|---|
| Ø 75 mm | Stainless steel | 15 m³/h | **20074N** | 1 | 8 | 0.08 |
| Ø 90 mm | Stainless steel | 23 m³/h | **20075N** | 1 | 9 | 0.08 |
| Ø 110 mm | Stainless steel | 27 m³/h | **20290N** | 1 | 10 | 0.08 |

Plastic grille

| Outlet connection to be glued | Grille | Flow rate | Code | Standard Pack | Standard Weight in kg | Standard Volume in m³ |
|---|---|---|---|---|---|---|
| Ø 75 mm | Plastic | 15 m³/h | **22416N** | 1 | 8 | 0.08 |
| Ø 90 mm | Plastic | 23 m³/h | **22417N** | 1 | 9 | 0.08 |
| Ø 110 mm | Plastic | 28 m³/h | **22418N** | 1 | 10 | 0.08 |
| Ø 125 mm | Plastic | 37 m³/h | **22419N** | 1 | 11 | 0.08 |

Minimum depth of installation: 1.5 m.
Maximum recommended flow rate down drain: 103 m³/h (0.5 m/s).

Complies with Standard **EN 13451-1-3**

Optional standard American size and antivortex in standard American size

## LINER AND PREFABRICATED POOL - DRAINS



Complies with Standard
**EN 13451-1-3**

Optional standard American size and antivortex in standard American size

### NORM main drain in polyester and fibreglass - 515 mm x 515 mm

Range of main drains manufactured in polyester resin and fibreglass. Grille in stainless steel or plastic. Optional hydrostatic valve.

Grille in stainless steel

| Outlet connection to be glued | Grille | Flow rate | Code | Standard Pack | Standard Weight in kg | Standard Volume in m³ |
|---|---|---|---|---|---|---|
| Ø 110 mm | Stainless steel | 42 m³/h | **20076N** | 1 | 16 | 0.23 |
| Ø 125 mm | Stainless steel | 51 m³/h | **20077N** | 1 | 17 | 0.23 |
| Ø 140 mm | Stainless steel | 66 m³/h | **20078N** | 1 | 18 | 0.23 |
| Ø 160 mm | Stainless steel | 95 m³/h | **20079N** | 1 | 19 | 0.23 |
| Ø 200 mm | Stainless steel | 103 m³/h | **20291N** | 1 | 20 | 0.23 |

Plastic grille

| Outlet connection to be glued | Grille | Flow rate | Code | Standard Pack | Standard Weight in kg | Standard Volume in m³ |
|---|---|---|---|---|---|---|
| Ø 110 mm | Plastic | 42 m³/h | **28722N** | 1 | 15 | 0.23 |
| Ø 125 mm | Plastic | 51 m³/h | **28723N** | 1 | 16 | 0.23 |
| Ø 140 mm | Plastic | 66 m³/h | **28724N** | 1 | 17 | 0.23 |
| Ø 160 mm | Plastic | 95 m³/h | **28725N** | 1 | 18 | 0.23 |
| Ø 200 mm | Plastic | 103 m³/h | **28726N** | 1 | 19 | 0.23 |

Minimum depth of installation: 1.5 m.
Maximum recommended flow rate down drain: 103 m³/h (0.5 m/s).





Optional:
Standard American sizes

### Main drain in polyester and fibreglass - 355 mm x 355 mm

Made of fibreglass-reinforced polyester. With a gelcoat finish. Comes with gaskets, flange and screws. Holes < 8 mm. Outlet connection to be glued. With optional hydrostatic valve.

Grille in AISI-316 stainless steel

| Outlet connection to be glued | Grille | Flow rate | Code | Standard Pack | Standard Weight in kg | Standard Volume in m³ |
|---|---|---|---|---|---|---|
| Ø 75 mm | AISI-316 | 16 m³/h | **20074** | 1 | 6.5 | 0.047 |
| Ø 90 mm | AISI-316 | 22 m³/h | **20075** | 1 | 6.5 | 0.047 |
| Ø 110 mm | AISI-316 | 33 m³/h | **20290** | 1 | 6.5 | 0.047 |

Max. recommended flow rate: 33.5 m³/h (0.5 m/s)
Recommended flow rate: 20 m³/h (0.3 m/s)

Grille in ABS plastic with protection against UV rays.

| Outlet connection to be glued | Grille | Flow rate | Code | Standard Pack | Standard Weight in kg | Standard Volume in m³ |
|---|---|---|---|---|---|---|
| Ø 75 mm | Plastic | 18 m³/h | **22416** | 1 | 6.5 | 0.047 |
| Ø 90 mm | Plastic | 27 m³/h | **22417** | 1 | 6.5 | 0.047 |
| Ø 110 mm | Plastic | 42 m³/h | **22418** | 1 | 6.5 | 0.047 |
| Ø 125 mm | Plastic | 45 m³/h | **22419** | 1 | 6.5 | 0.047 |

Max. recommended flow rate: 45 m³/h (0.5 m/s)
Recommended flow rate: 27 m³/h (0.3 m/s)

+ info PDB
Further information on **PRODUCTS**
www.astralpool.com

# LINER AND PREFABRICATED POOL - MAIN DRAIN ACCESSORIES



## Main drain in polyester and fibreglass - 515 mm x 515 mm

With a gelcoat finish. Grille in AISI-316 stainless steel. Comes with gaskets, flanges and screws. Holes < 8 mm. Outlet connection to be glued. Recommended flow rate: 62 m³/h (0.3 m/s). Max. recommended flow rate: 103 m³/h (0.5 m/s.). With optional hydrostatic valve.

Grille in AISI-316 stainless steel

| Outlet connection to be glued | Grille | Flow rate | Code | Standard Pack | Standard Weight in kg | Standard Volume in m³ |
|---|---|---|---|---|---|---|
| Ø 110 mm | AISI-316 | 42 m³/h | **20076** | 1 | 1.4 | 0.132 |
| Ø 125 mm | AISI-316 | 51 m³/h | **20077** | 1 | 1.4 | 0.132 |
| Ø 140 mm | AISI-316 | 66 m³/h | **20078** | 1 | 1.4 | 0.132 |
| Ø 160 mm | AISI-316 | 95 m³/h | **20079** | 1 | 1.4 | 0.132 |
| Ø 200 mm | AISI-316 | 103 m³/h | **20291** | 1 | 1.4 | 0.132 |

Grille in ABS plastic with protection against UV rays.

| Outlet connection to be glued | Grille | Flow rate | Code | Standard Pack | Standard Weight in kg | Standard Volume in m³ |
|---|---|---|---|---|---|---|
| Ø 110 mm | Plastic | 42 m³/h | **28722** | 1 | 1.4 | 0.132 |
| Ø 125 mm | Plastic | 51 m³/h | **28723** | 1 | 1.4 | 0.132 |
| Ø 140 mm | Plastic | 66 m³/h | **28724** | 1 | 1.4 | 0.132 |
| Ø 160 mm | Plastic | 95 m³/h | **28725** | 1 | 1.4 | 0.132 |
| Ø 200 mm | Plastic | 103 m³/h | **28726** | 1 | 1.4 | 0.132 |



## Hydrostatic valve

To alleviate the pressure that can build up under the pool shell due to groundwater, it is recommended that a hydrostatic valve and a drainage pipe be fitted to the main drain. Hydrostatic valve to be fitted to the 2" bottom outlet on main drains. Made of white ABS, with stainless steel screw and spring. 1½" male thread.

| Code | Standard Pack | Standard Weight in kg | Standard Volume in m³ |
|---|---|---|---|
| **00277** | 4 | 1.0 | 0.003 |



## Drainage pipe

Drainage tube with 1½" BSP thread connection for drains 00270 and 07880 (see page 102), 27838 (see page 82), 26197 (see page 104) y 27125 (see page 82). Manufactured in ABS.

| Code | Standard Pack | Standard Weight in kg | Standard Volume in m³ |
|---|---|---|---|
| **21581** | 24 | 3.54 | 0.021 |







## Flush-fit antivortex cover

Special flush-fit design that enables pool cleaners to go over it without blocking it up.

The 415 mm x 415 mm cover (25344) can be fitted to the following main drains:

**With stainless steel grille:**
-20074
-20075
-20290

**With plastic grille:**
-22416
-22417
-22418
-22419

Complies with Standard **EN 13451-1:2000**

The 570 mm x 570 mm cover (28556) can be fitted to the following main drains:

**With stainless steel grille:**
-20076
-20077
-20078
-20079

**With plastic grille:**
-28722
-28723
-28724
-28725

| | Code | Standard Pack | Standard Weight in kg | Standard Volume in m³ |
|---|---|---|---|---|
| 415 mm x 415 mm. Height: 70 mm | **25344** | 1 | 2.25 | 0.012 |
| 570 mm x 570 mm. Height: 60 mm | **28556** | 1 | 3.90 | 0.015 |

## LINER AND PREFABRICATED POOL - LEVEL REGULATORS



### Level regulator

Made of ABS. May be connected from the bottom or side, as required. Semi-die cut outlets to the pool so that the most suitable connection can be made. Adjustable lid height and level.
For all types of skimmers.

| Code | Standard Pack | Standard Weight in kg | Standard Volume in m³ |
|---|---|---|---|
| **15862** | 1 | 2.0 | 0.016 |

## PREFABRICATED LINER POOLS - ABS INLETS

For all of the return inlets on this page

Complies with Standards
**EN 16582-1**
**EN 16713-2**

**MULTIFLOW SYSTEM**
The inlet's eyeball is supplied pre-marked with a number of diameters (14–20 and 25). With the help of a punch (also supplied with the inlet) one of the diameters can be cut out at the time of installation.
Max. recommended flow rate for a max. flow of 4 m/s:
Ø 14 mm = 2.2 m³/h. Ø 20 mm = 4.5 m³/h. Ø 25 mm = 7 m³/h







**00330**


**00330CL090**


**00330CL129**


**00330CL144**

### Multiflow threaded return inlet for liner pools

Outer 2" thread, Ø 50mm inner. For liner pools. Comes in white ABS, with gaskets and screws. Installation with bushing 15662 or 15663 is recommended (see page 113).

| | Code | Standard Pack | Standard Weight in kg | Standard Volume in m³ |
|---|---|---|---|---|
| **Multiflow return inlet** | | | | |
| White | **00330** | 12 | 4.5 | 0.020 |
| Beige | **00330CL090** | 12 | 4.5 | 0.020 |
| Light grey | **00330CL129** | 12 | 4.5 | 0.020 |
| Anthracite grey | **00330CL144** | 12 | 4.5 | 0.020 |



### Multiflow threaded return inlet for liner pools. Parker model

2" external thread, Ø 50 mm inner wall with Parker system. (Self-tapping screws). For installation with wall conduits code 15664 or 15665 (see page 113).

| Code | Standard Pack | Standard Weight in kg | Standard Volume in m³ |
|---|---|---|---|
| **06498** | 20 | 4.72 | 0.021 |


**00334**


**00334CL090**


**00334CL129**


**00334CL144**

### Multiflow threaded return inlet for prefabricated pools

Outer 2" thread and Ø 50 mm inner wall to be glued. Made of white ABS.

| | Code | Standard Pack | Standard Weight in kg | Standard Volume in m³ |
|---|---|---|---|---|
| White | **00334** | 24 | 4.61 | 0.020 |
| Beige | **00334CL090** | 24 | 4.61 | 0.020 |
| Light grey | **00334CL129** | 24 | 4.61 | 0.020 |
| Anthracite grey | **00334CL144** | 24 | 4.61 | 0.020 |

+ info
Further information on **PRODUCTS**
www.astralpool.com

# LINER AND PREFABRICATED POOL - ABS INLETS



## Multiflow threaded return inlet for prefabricated pools

2" outer thread, 1½" inner thread. Made of white ABS. Comes with gaskets. The slots in the grille are no larger than 8 mm.

| | Code | Standard Pack | Standard Weight in kg | Standard Volume in m³ |
|---|---|---|---|---|
| Standard inlet | **06481** | 30 | 5.1 | 0.021 |



## Multiflow return inlet for panel pools

Inlets specially designed for installation in panel pools between 10 and 15 cm thick. To be glued to a Ø 50 mm pipe. Made of white ABS. Comes with gaskets.

| Code | Standard Pack | Standard Weight in kg | Standard Volume in m³ |
|---|---|---|---|
| **33091** | 8 | 3.35 | 0.021 |


**56499**


**56499CL090**


**56499CL129**


**56499CL144**

## NORM return inlets

Range of inlets suitable for installation in public and private pools. Manufactured in white ABS with UV treatment.

| | Code | Standard Pack | Standard Weight in kg | Standard Volume in m³ |
|---|---|---|---|---|
| For prefabricated/liner pools - White | **56499** | 12 | 4.5 | 0.020 |
| For prefabricated/liner pools - Beige | **56499CL090** | 12 | 4.5 | 0.020 |
| For prefabricated/liner pools - Light grey | **56499CL129** | 12 | 4.5 | 0.020 |
| For prefabricated/liner pools - Anthracite grey | **56499CL144** | 12 | 4.5 | 0.020 |
| For prefabricated pools - White | **56500** | 24 | 4.5 | 0.020 |
| For prefabricated pools - Beige | **56500CL090** | 24 | 4.5 | 0.020 |
| For prefabricated pools - Light grey | **56500CL129** | 24 | 4.5 | 0.020 |
| For prefabricated pools - Anthracite grey | **56500CL144** | 24 | 4.5 | 0.020 |
| For prefabricated pools, Parker - White | **17383** | 24 | 4.5 | 0.020 |
| For prefabricated pools, Parker - Beige | **17383CL090** | 24 | 4.5 | 0.020 |
| For prefabricated pools, Parker - Light grey | **17383CL129** | 24 | 4.5 | 0.020 |
| For prefabricated pools, Parker - Anthracite grey | **17383CL144** | 24 | 4.5 | 0.020 |

Complies with Standard
**EN 13451-1-3**



## Return nozzle for prefabricated pools with liner

The diameter of the outer wall has a smaller diameter than other models so that it fits better in curved walls.

| | Code | Standard Pack | Standard Weight in kg | Standard Volume in m³ |
|---|---|---|---|---|
| Threaded 1½" BSP return nozzle | **32450** | 24 | 7.1 | 0.021 |
| Ø 50 mm return nozzle to be glued | **32451** | 24 | 6.9 | 0.021 |

Complies with Standards
**EN 16582-1**
**EN 16713-2**



## Adjustable return inlet

Comes with gaskets, flange and screws. 3 adjustable positions: (100%, 65%, 35%). Flow rate: 13.5 m³/h. Outer Ø 63 mm connection.

| Code | Standard Pack | Standard Weight in kg | Standard Volume in m³ |
|---|---|---|---|
| **15864** | 12 | 4.2 | 0.02 |

Complies with Standard
**13451-1-3**

Complies with Standards
**EN 16582-1**
**EN 16713-2**

## LINER AND PREFABRICATED POOL - ABS INLETS



00340



00340CL090



00340CL129



00340CL144

Complies with Standard **13451-1-3**

Complies with Standards **EN 16582-1** **EN 16713-2**

### Pool floor return inlet for prefabricated pools

Return nozzle. Comes with gaskets, flanges and screws. Adjustable flow rate. Max. flow rate: 12 m³/h.

| | Code | Standard Pack | Standard Weight in kg | Standard Volume in m³ |
|---|---|---|---|---|
| 2" outer thread and internal Ø 50 mm - White | **00340** | 12 | 5.4 | 0.020 |
| 2" outer thread and internal Ø 50 mm - Beige | **00340CL090** | 12 | 5.4 | 0.020 |
| 2" outer thread and internal Ø 50 mm - Light grey | **00340CL129** | 12 | 5.4 | 0.020 |
| 2" outer thread and internal Ø 50 mm - Anthracite grey | **00340CL144** | 12 | 5.4 | 0.020 |
| To be glued Ø 63 mm PN 6 outer wall, Ø 50 mm inner | **20139** | 12 | 5.4 | 0.021 |



Complies with Standard **13451-1-3**

Complies with Standards **EN 16582-1** **EN 16713-2**

### BCN03 pool floor return inlet

Adjustable pool floor return inlet for liner pools. Designed to be glued to the inside of PN6 and PN10 piping. Made of white ABS, with self-tapping screws or with metal inserts. Plastic or stainless steel flange, depending on the model. Maximum flow rate: 9.5 m³/h.

| | Code | Standard Pack | Standard Weight in kg | Standard Volume in m³ |
|---|---|---|---|---|
| PN6 self-tapping plastic flange | **28230** | 12 | 3.25 | 0.031 |
| With PN6 plastic flange inserts | **28231** | 12 | 3.55 | 0.031 |
| PN10 self-tapping stainless steel flange | **28501** | 12 | 4.24 | 0.031 |
| With PN10 stainless steel inserts | **28502** | 12 | 4.54 | 0.031 |



Complies with Standard **13451-1-3**

Complies with Standards **EN 16582-1** **EN 16713-2**

### BCN03 adjustable pool floor return inlet

Pool floor return inlet for liner pools. Thanks to the adjustable feature, its installation in the pool floor is made extremely easy as it can be fitted after the concrete has been laid with wall conduit 43590.

| | Code | Standard Pack | Standard Weight in kg | Standard Volume in m³ |
|---|---|---|---|---|
| With plastic flange inserts | **43586** | 12 | 2.04 | 0.033 |
| Plastic self-tapping flange | **43587** | 12 | 2.04 | 0.033 |
| With stainless steel flange inserts | **43588** | 12 | 2.04 | 0.033 |
| Self-tapping stainless steel flange | **43589** | 12 | 2.04 | 0.033 |



### Ø 90 mm wall conduit

PVC wall conduit. Cutting area of 120 mm for fitting it to the pool wall or floor. Ø 63 or Ø 75 connection, as required.

| | Code | Standard Pack | Standard Weight in kg | Standard Volume in m³ |
|---|---|---|---|---|
| Ø 90/Ø 63–Ø 75 mm wall conduit | **43590** | 9 | 7.3 | 0.033 |

For inlets:
Net'N'Clean: 43584 - 43585
BCN 03: 43586 - 43587 - 43588 - 43589
Return inlet/suction nozzle for high flow rates: 41518 - 41519 - 41520 - 41521

+ info
PDB
Further information on **PRODUCTS**
www.astralpool.com

# LINER AND PREFABRICATED POOL - ABS INLETS



## 3" adjustable pool floor return inlet

Made of white ABS. Suction. Comes with gaskets, flanges and screws. Flow rate adjusted by turning the grille. Suction surface area: 0.015 m². Flow rate at 0.4 m/s: 20 m³/h. Max. recommended flow rate: 26 m³/h. (0.5 m/s.).

| | Code | Standard Pack | Standard Weight in kg | Standard Volume in m³ |
|---|---|---|---|---|
| Grille in AISI-304 stainless steel | **08316** | 2 | 2.65 | 0.047 |
| Grille in white ABS | **11795** | 2 | 2.65 | 0.047 |



## Suction nozzle for liner pools

Outer 2" thread, internal Ø 50 mm. Made of white ABS. Comes with plug, gaskets and screws. Recommended for installation with wall conduit 15663.

| | Code | Standard Pack | Standard Weight in kg | Standard Volume in m³ |
|---|---|---|---|---|
| Standard return inlet - White | **00332** | 12 | 4.22 | 0.020 |



## Suction nozzle for panel pools

For installation in panel pools between 10 and 15 cm thick. Comes with gaskets. Connections: To be glued to Ø 50 mm piping and 1½" BSP thread.

| Code | Standard Pack | Standard Weight in kg | Standard Volume in m³ |
|---|---|---|---|
| **33092** | 8 | 3.35 | 0.021 |


17382


17382CL090


17382CL129


17382CL144

## Return nozzle for liner pools

Made of white ABS. Comes with gaskets, flanges and screws. Connections: outer 2" thread and Ø 50 mm inner.

| | Code | Standard Pack | Standard Weight in kg | Standard Volume in m³ |
|---|---|---|---|---|
| White | **17382** | 20 | 6.0 | 0.020 |
| Beige | **17382CL090** | 20 | 6.0 | 0.020 |
| Light grey | **17382CL129** | 20 | 6.0 | 0.020 |
| Anthracite grey | **17382CL144** | 20 | 6.0 | 0.020 |


00336


00336CL090


00336CL129


00336CL144

## Suction nozzle for prefabricated pools

Outer 2" thread, Ø 50 mm inner wall. For prefabricated pools. Made of white ABS. Comes with 1½" threaded plug.

| | Code | Standard Pack | Standard Weight in kg | Standard Volume in m³ |
|---|---|---|---|---|
| White | **00336** | 24 | 4.13 | 0.020 |
| Beige | **00336CL090** | 24 | 4.13 | 0.020 |
| Light grey | **00336CL129** | 24 | 4.13 | 0.020 |
| Anthracite grey | **00336CL144** | 24 | 4.13 | 0.020 |

# LINER AND PREFABRICATED POOL - ABS INLETS



## Double gasket kit

Kit made up of a double gasket and the screws necessary for the installation of nozzles in panel pools. Made of TPE, the kit enables the installation of various accessories in pool shells and protects the panelling from coming into contact with water. Easy to install. Prevents corrosion of the panelling in the area that has been die cut. We recommend to place this Kit on panel pools of metal sheet in nozzles 00330; 00332; 17382; 17383 and 56499

| | Code | Standard Pack | Standard Weight in kg | Standard Volume in $m^3$ |
|---|---|---|---|---|
| Inserts for nozzles | **43455-0500** | 80 | - | 0.035 |



## Return inlet/suction nozzle for high flow rates

Return inlet for large flow rates that can also be used as a suction nozzle. Maximum suction flow rate of 30$m^3$/h for a maximum flow rate speed of 4 m/s. Maximum suction flow rate of 5 $m^3$/h for a maximum flow rate speed of 0.5 m/s. PVC body. Connection for Ø 75 or Ø 90 mm pipe. Inlets can be installed into bushing 43590 (see page 109). Grille can be adjusted in any direction.

| | Code | Standard Pack | Standard Weight in kg | Standard Volume in $m^3$ |
|---|---|---|---|---|
| Panel pools | **41518** | 10 | 5.50 | 0.021 |
| Prefabricated pools | **41521** | 12 | 4.20 | 0.021 |



## Suction nozzle for overflow pools with liner

PVC body. Maximum flow rate of 7 $m^3$/h for a maximum flow rate velocity of 0.5 m/s. Connection for Ø 75 or Ø 90 piping. Nozzle with double gasket. Thanks to the design of the flange, the nozzle is able to take in all of the water in the overflow channel.

| Code | Standard Pack | Standard Weight in kg | Standard Volume in $m^3$ |
|---|---|---|---|
| **41519** | 12 | 4.83 | 0.021 |



## Return nozzle for prefabricated pools

2" outer thread, 1½" inner thread. Made of white ABS.

| | Code | Standard Pack | Standard Weight in kg | Standard Volume in $m^3$ |
|---|---|---|---|---|
| Standard inlet | **06484** | 30 | 4.3 | 0.021 |
| NPT outlet | **11582** | 30 | 4.3 | 0.021 |



## Hydromassage kit

Made up of a return inlet and wall conduit fitted with an air inlet and a venturi. Two wall conduit lengths available. Ø 50 mm water connection pipe and Ø 20 mm air suction pipe.

| | Code | Standard Pack | Standard Weight in kg | Standard Volume in $m^3$ |
|---|---|---|---|---|
| **Hydromassage kit for prefabricated polyester pools:** | | | | |
| Length of wall conduit 190 mm | **32114** | 12 | 3.5 | 0.021 |
| Length of wall conduit 275 mm | **32384** | 10 | 3.4 | 0.021 |
| **Hydromassage kit for prefabricated pools with liner:** | | | | |
| Length of wall conduit 190 mm | **32115** | 12 | 3.5 | 0.021 |
| Length of wall conduit 275 mm | **32385** | 8 | 3.5 | 0.021 |

+ info
Further information on **PRODUCTS**
**www.astralpool.com**

# LINER AND PREFABRICATED POOL - STAINLESS STEEL INLETS



Complies with Standards
**EN 16582-1**
**EN 16713-2**

## Return inlet for liner pool with Ø 20mm ball

1½" external thread. Manufactured in AISI-316 stainless steel. Ø 20 mm ball. Comes with gaskets and screws. Maximum recommended flow of 4.5 m³/hour according to EN 16582-1 and EN16713-2 standards if installed at a maximum of 500 mm below pool water level.

| Code | Standard Pack | Standard Weight in kg | Standard Volume in m³ |
|---|---|---|---|
| **16327** | 1 | 0.5 | 0.001 |



Complies with Standard
**EN 13451-1-3**

Complies with Standards
**EN 16582-1**
**EN 16713-2**

## Return inlet for liner pool with Ø 25 mm ball

1½" external thread. Manufactured in AISI-316 stainless steel. Ø 25 mm ball. Comes with gaskets and screws. Recommended flow rate: 7 m³/h.

| Code | Standard Pack | Standard Weight in kg | Standard Volume in m³ |
|---|---|---|---|
| **69877** | 1 | 0.5 | 0.001 |



Complies with Standard
**EN 13451-1-3**

Complies with Standards
**EN 16582-1**
**EN 16713-2**

## Adapter for pool wall conduits

1½" external thread. Manufactured in AISI-316 stainless steel. For adapting concrete pool bushings to prefabricated pool ones. Must be used with stainless steel inlet 16331, 69878.

| Code | Standard Pack | Standard Weight in kg | Standard Volume in m³ |
|---|---|---|---|
| **26171** | 1 | 0.2 | 0.001 |



Complies with Standards
**EN 16582-1**
**EN 16713-2**

## Bushing return inlet for liner pool with Ø20 ball

Manufactured in AISI-316 stainless steel. Fits to 00344 and 00345 bushings and adapts to converter 26171. Comes with gaskets and screws. Install at a maximum of 500 mm below water level. Ball fitted using screws. Recommended flow rate: 4.5 m³/h.

| Code | Standard Pack | Standard Weight in kg | Standard Volume in m³ |
|---|---|---|---|
| **16331** | 1 | 0.3 | 0.001 |



Complies with Standard
**EN 13451-1-3**

Complies with Standards
**EN 16582-1**
**EN 16713-2**

## Bushing return inlet for liner pool with Ø25 ball

Manufactured in AISI-316 stainless steel. Fits to 00344 and 00345 bushings and adapts to converter 26171. Comes with gaskets and screws. Ball fitted using screws. Recommended flow rate: 7 m³/h.

| Code | Standard Pack | Standard Weight in kg | Standard Volume in m³ |
|---|---|---|---|
| **69878** | 1 | 0.3 | 0.001 |

## LINER AND PREFABRICATED POOL - STAINLESS STEEL INLETS



Complies with Standard **EN 13451-1-3**

Complies with Standards **EN 16582-1** **EN 16713-2**

### Adjustable pool floor return inlet

2" external thread. Made of AISI-316 stainless steel. Can be fitted in concrete and prefabricated pools. The water flow can be adjusted by loosening or tightening the central screw. Max. recommended flow rate complaint with standard EN 13451-3: 14 m³/h.

| Code | Standard Pack | Standard Weight in kg | Standard Volume in m³ |
|---|---|---|---|
| **15839** | 1 | 0.9 | 0.002 |



Complies with Standard **EN 13451-1-3**

Complies with Standards **EN 16582-1** **EN 16713-2**

### Suction nozzle for liner pools

In AISI-316 stainless steel. Comes with sealing gaskets, flange and screws. With 1½" outer thread. Push-fit connection 06584 is needed.

| Code | Standard Pack | Standard Weight in kg | Standard Volume in m³ |
|---|---|---|---|
| **16330** | 1 | 0.5 | 0.001 |

## LINER AND PREFABRICATED POOL - WALL BUSHINGS

Range of 300 mm long conduits for Ø 2" inlets and Multiflow that can be cut to different lengths, depending on the thickness of the pool wall. Made of ABS. The ribs of the end plates have holes for fitting the wall conduit to the pool structure, which makes assembly straightforward. The inlet's end plate ensures that it fits flush to the pool wall so that the liner remains flat against the wall and does not swell. This system is aesthetically pleasing as only the face plate can be seen.



### Wall conduit with 2" rear male thread and Ø 50 mm smooth inner wall

| | Code | Standard Pack | Standard Weight in kg | Standard Volume in m³ |
|---|---|---|---|---|
| 2" front female thread for nozzles with 2" male thread | **15663** | 12 | 4.0 | 0.040 |
| 2" front female thread for nozzle with code number 06498 only | **15664** | 14 | 4.2 | 0.040 |

### Wall conduit with smooth Ø 63 mm rear connection and smooth Ø 50 mm inner wall

| | Code | Standard Pack | Standard Weight in kg | Standard Volume in m³ |
|---|---|---|---|---|
| 2" front female thread for for nozzles with 2" male thread | **15662** | 12 | 5.0 | 0.040 |
| 2" front female thread for for nozzle 06498 only | **15665** | 14 | 5.4 | 0.040 |

+ info PDB
Further information on PRODUCTS
www.astralpool.com

# LINER AND PREFABRICATED POOL - WALL BUSHINGS



## Wall conduits in PVC

Grey PVC.

| | Code | Standard Pack | Standard Weight in kg | Standard Volume in m³ |
|---|---|---|---|---|
| **150 mm long**<br>2" outer thread + Ø 50 mm inner, 2" inner thread | **00322** | 40 | 3.0 | 0.011 |
| **300 mm long**<br>2" female and male thread connection | **00323** | 20 | 3.0 | 0.011 |
| 2" rear male thread pipe connection or smooth inner wall for MINI projector (33684) | **00324** | 20 | 3.0 | 0.011 |
| 2" outer thread + Ø 50 mm inner wall, 1½" inner thread | **00325** | 20 | 3.0 | 0.011 |
| 2" outer thread + Ø 50 mm inner wall, Ø 50 mm specially designed for nozzles with code numbers 00289, 07957, 00304, 00305 and 00306. | **00326** | 20 | 3.0 | 0.011 |



## Stainless steel wall conduit

Made in stainless steel. AISI-304. Both ends have a 1 ½" female thread. With an equipotential outlet. For inlet 16331 (see page 112).

| | Code | Standard Pack | Standard Weight in kg | Standard Volume in m³ |
|---|---|---|---|---|
| Length 240 mm | **00344** | 1 | 0.7 | 0.003 |
| Length 340 mm | **00345** | 1 | 0.9 | 0.005 |

# SKIMFILTERS



## Skimfilter pack

Flow rate: 3.8 m³/h. Mini-skimmer opening. 2" inlet connection. 12 V (50 Hz) motor. 230-12V 50 Hz transformer. EC- and GS-certified. Cartridge included. For fixing to outer pool wall. Replacement cartridge: 09037R0200/1.

| Code | Standard Pack | Standard Weight in kg | Standard Volume in m³ |
|---|---|---|---|
| **30889** | 1 | 6.45 | 0.038 |



## Floating skimmer

Diameter 160 mm. Maximum flow rate: 5 m³/h. Ø 32 mm and Ø 38 mm outer connections. With plastic support clamp designed for panel pools.

| Code | Standard Pack | Standard Weight in kg | Standard Volume in m³ |
|---|---|---|---|
| **16573** | 1 | 1.3 | 0.024 |

## SWIMMING POOL SHELL MATERIAL PACKS

### Pool shell equipment packs

Pack made up of:

2 skimmers/3 multiflow return inlets/1 suction nozzle/1 round main drain.

| | Code | Standard Pack | Standard Weight in kg | Standard Volume in $m^3$ |
|---|---|---|---|---|
| Pack for concrete pools | **56301** | 1 | - | - |
| Pack for liner pools | **58930** | 1 | - | - |

| | | | | |
|---|---|---|---|---|
| **Pack for concrete pools**<br>Contains the following products: |  <br>**00249**<br>**2x** |  <br>**56378**<br>**1x** |  <br>**24413**<br>**3x** |  <br>**24415**<br>**1x** |
| **Pack for liner pools**<br>Contains the following products: |  <br>**01464**<br>**2x** |  <br>**56381**<br>**1x** |  <br>**56381**<br>**3x** |  <br>**00332**<br>**1x** |

+ info PDB
Further information on **PRODUCTS**
www.astralpool.com

## SWIMMING POOL SHELL MATERIAL PACKS

### Interchangeable basin equipment

Bushing, return inlet, suction nozzle, flange assembly to be installed in concrete, prefabricated and liner pools
The measurements of each item make it possible to interchange them with the stainless steel sets.
The inlets can be installed in any bushing with a 1½" BSP thread. There is a flange set to install the inlets in pools with a liner.

All items mainly made in plastic (ABS), except screws and gaskets.

Each item can be assembled with the stainless steel sets. Interchangeable stainless steel/plastic codes.

| | Code | Standard Pack | Standard Weight in kg | Standard Volume in $m^3$ |
|---|---|---|---|---|
| Stainless steel interchangeable return inlet | **49758** | 1 | - | 0.021 |
| ABS interchangeable return inlet | **49754** | 1 | - | 0.021 |
| ABS interchangeable return inlet circular vent | **52681** | 1 | - | 0.021 |
| Stainless steel interchangeable suction nozzle | **49759** | 1 | - | 0.021 |
| ABS interchangeable suction nozzle | **72672** | 1 | - | 0.021 |
| Stainless steel interchangeable flange inlet set | **49760** | 1 | - | 0.021 |
| ABS interchangeable flange inlet set | **49756** | 1 | - | 0.021 |
| Interchangeable bushing inlet set stainless steel for threading | **49761** | 1 | - | 0.021 |
| Interchangeable bushing inlet set ABS for threading | **49757** | 1 | - | 0.021 |
| Interchangeable bushing inlet set ABS for gluing | **49832** | 1 | - | 0.021 |

| |  Return nozzle |  Suction nozzle |  Flange |  Wall conduits |
|---|---|---|---|---|
| STAINLESS STEEL | **49758** | **49759** | **49760** | **49761** |
| ABS | **49754**<br>**52681*** | **72672** | **49756** | **49757**<br>**49832**** |

* Circular vent
** To glue

## INSTALLATION DIAGRAMS

### Skimmer installation

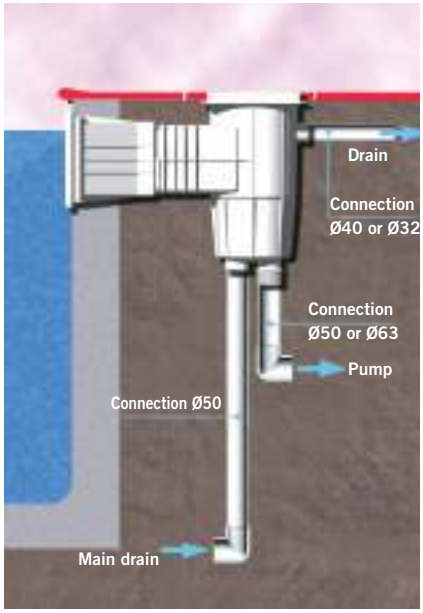


### Water level regulator installation

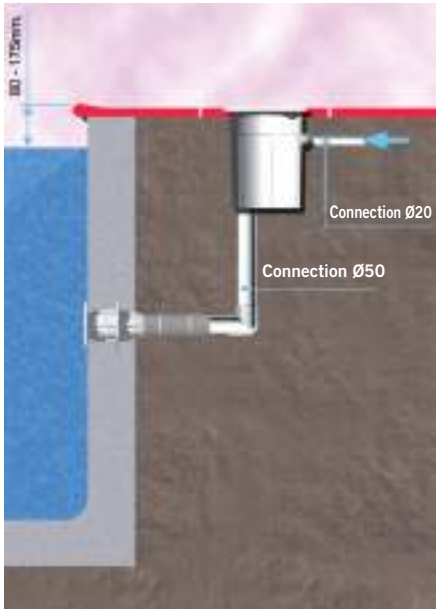


### Main drain installation

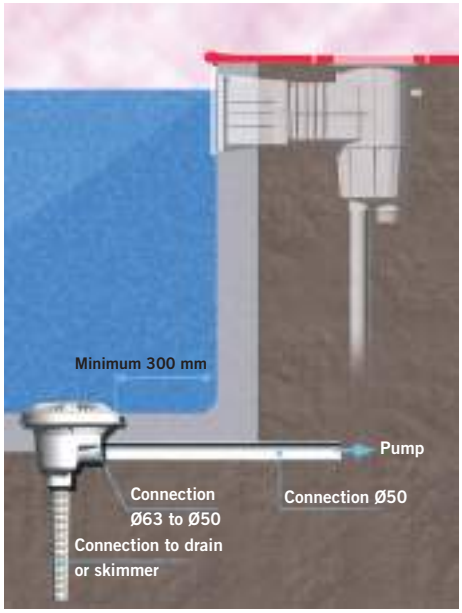


### Nozzle installation

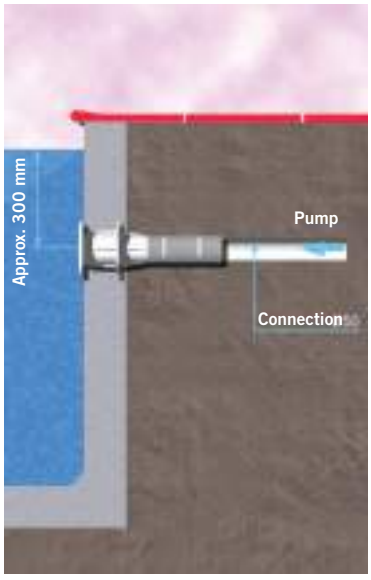


### Underwater installation

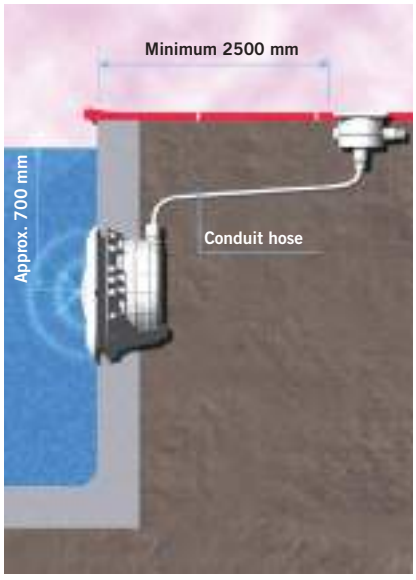


### Net'n'Clean valve installation

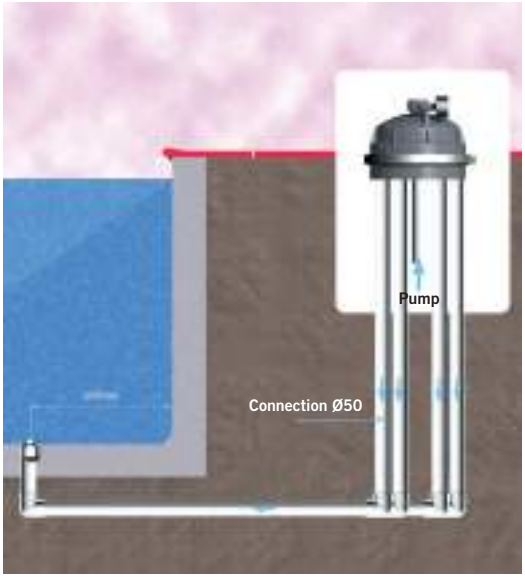

## INSTALLATION DIAGRAMS

### CONCRETE POOLS:

Concrete / liner

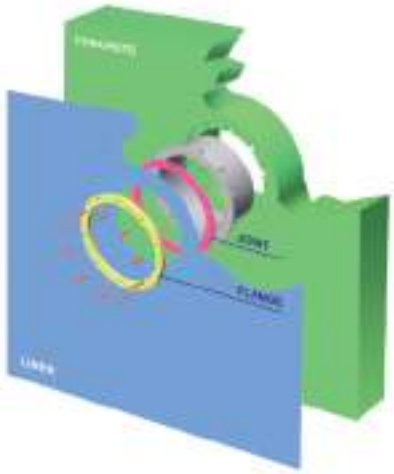

Concrete



### FIBREGLASS POOLS:

Fibreglass



Threaded fibreglass



### PANEL POOLS:

1 gasket

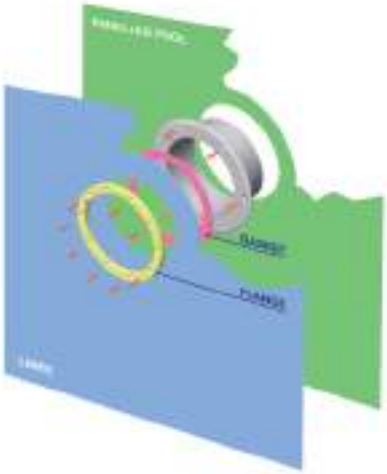

2 gaskets

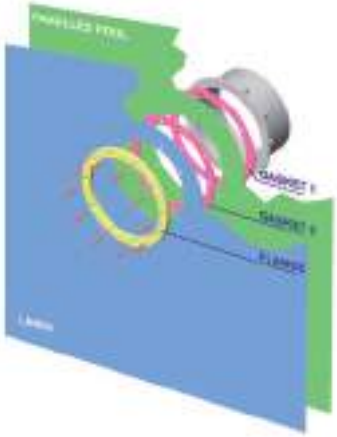

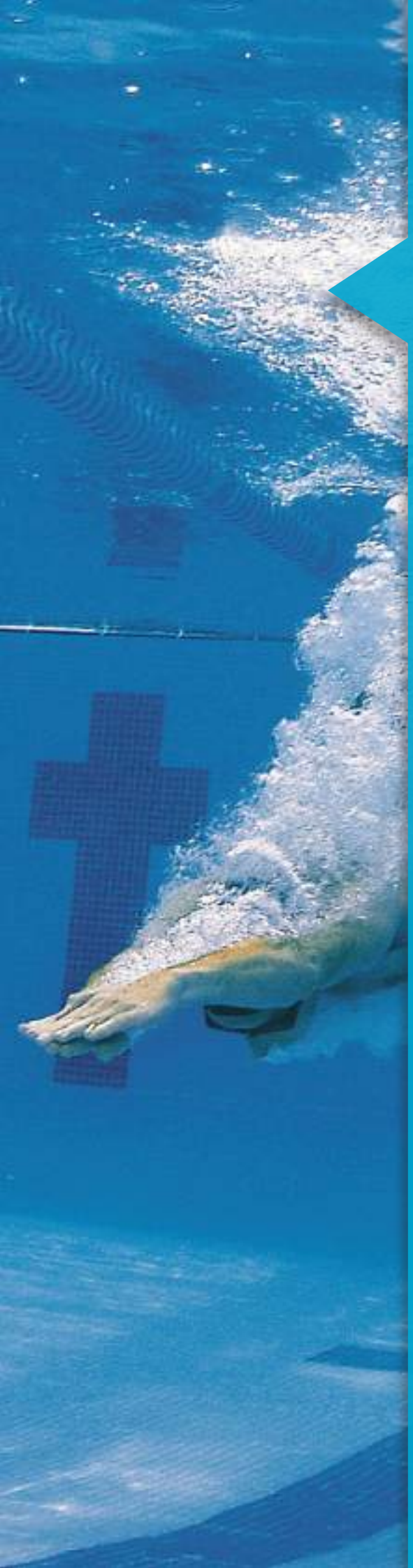

# FILTRATION


120 • Nanofiber filter
121 • Cartridge filters
121 • Hydrospin pre-filter
122 • OC-1 Filters
123 • Injection moulded sand filters
124 • Blow-moulded sand filters
127 • Laminated sand filters
132 • High-performance laminated sand filters
139 • Bobbin-wound sand filters
140 • Compacts without interior installation
140 • Compacts with interior installation
142 • Selector valves
146 • Gauge panel unit
147 • Filtration media and accessories

+ info
Further information on **PRODUCTS**
**www.astralpool.com**

# NANOFIBER FILTER



## Nanofiber filter

Filter for residential pools up to 90m³ characterised by its high-quality filtration: 5-8 microns, self-cleaning function, small size. The NanoFiber filter uses an innovative material that delivers better quality filtration due to its network of nanofibers.

- Easy to use
- Reliable
- Lower water consumption
- Higher water filtration quality
- Compact
- Easy to clean
- Dirt slow to build up without limescale
- Compatible with current filter systems on the market
- Replacement filtration media



| | Code | Standard Pack | Standard Weight in kg | Standard Volume in m³ |
|---|---|---|---|---|
| NanoFiber Auto 150 filter (10 m³/h) | **67355-0100** | 1 | 10.68 | 0.116 |
| NanoFiber Auto 180 filter (14 m³/h) | **67356-0100** | 1 | 10.68 | 0.116 |
| NanoFiber Auto 200 filter (18 m³/h) | **67357-0100** | 1 | 10.68 | 0.116 |
| Auto adaptor kit | **67509** | 1 | 3.68 | 0.027 |
| NanoFiber 150 filter (10 m³/h) | **64837** | 1 | 9.68 | 0.093 |
| NanoFiber 180 filter (14 m³/h) | **64838** | 1 | 9.68 | 0.093 |
| NanoFiber 200 filter (18 m³/h) | **64839** | 1 | 9.68 | 0.093 |
| **Replacement filtration media** | | | | |
| For Nanofiber 150 | **65383** | 1 | 1.58 | 0.022 |
| For Nanofiber 180 | **65384** | 1 | 1.58 | 0.022 |
| For Nanofiber 200 | **65385** | 1 | 1.58 | 0.022 |

**Auto versions can be connected to a 07444 manual valve, a 70769 automatic valve or an AstralPool MAC**

| Model | Filtration surface area (m²) | Flow rate (m³/h) | Max. pool volume (m³) |
|---|---|---|---|
| NanoFiber 150 | 4,5 | 10 | 70 |
| NanoFiber 180 | 5,2 | 14 | 80 |
| NanoFiber 200 | 6,0 | 18 | 90 |



Complies with Standard
**EN 16713-01**



## CARTRIDGE FILTERS



### Viron cartridge filter

Manufactured in injection-moulded plastic and suitable for high-pressure applications. Easy-access closing system, filtration surfaces of 39m² or 50m² enabling prolonged intervals between each cleaning operation or cartridge replacement Includes water purge, oil pressure gauge and connection accessories. 5-year guarantee on the tank.Complies with filtration requirements as per standard EN 16713-1.

| | Code | Standard Pack | Standard Weight in kg | Standard Volume in m³ |
|---|---|---|---|---|
| Viron QL 420 cartridge filter | **76340** | 1 | 48 | 0.252 |
| Viron QL 540 cartridge filter | **76341** | 1 | 50 | 0.355 |

| Model | Filtration area | Maximum flow rate | Weight | Height |
|---|---|---|---|---|
| Viron QL 420 | 39 m² | 500 lpm | 35 kg | 943 mm |
| Viron QL 540 | 50 m² | 500 lpm | 40 kg | 943 mm |

Complies with Standard
**EN 16713-01**

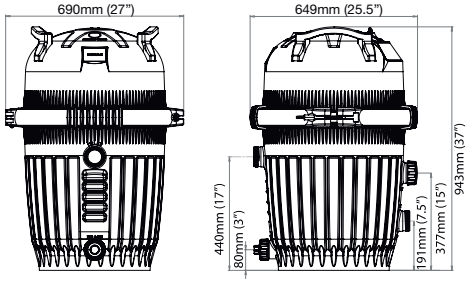


## HYDROSPIN PRE-FILTER





### Hydrospin & Hydrospin Compact

Hydrocyclone pre-filters can be fitted to filtration systems in both new and old installations. Hydrospin is able to treat flows up to 30 m²/h with a maximum working pressure of 2.5 bars. It is fitted between the pump and the filter and separates out solids of up to 40 micra, thus reducing by half the amount of water consumed for cleaning the filtration system. HydroSpin has a device for collecting solids with three separate areas (settling, clarifying and clouding). It can be cleaned using just five litres of water without having to stop the pump.

| | Code | Standard Pack | Standard Weight in kg | Standard Volume in m³ |
|---|---|---|---|---|
| Hydrospin | **45289** | 1 | 7.8 | 0.088 |
| Hydrospin Compact | **53743** | 1 | 4.0 | 0.033 |
| Kit for wall installation, for 45289 | **47158** | 4 | 4.2 | 0.117 |

| | 45289 | 53743 |
|---|---|---|
| **Working pressure (bar)** | 2,5 | 2,5 |
| **Connections** | Ø 63 | Ø 50 thread 2¼" |
| **Purge connection** | 1" | ¾ |
| **Min. flow rate (m³/h)** | 5 | 3 |
| **Max. flow rate (m³/h)** | 30 | 16.5 |
| **Water for cleaning (l)** | 5 | 15 |
| **Separate solids (micron)** | 40 | 60 |
| **Floor support** | Included | |
| **Wall support** | Accessory 47158 | Included |

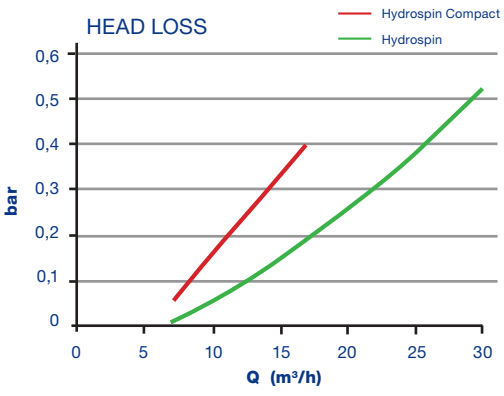

+ info
Further information on **PRODUCTS**
**www.astralpool.com**

# OC-1 FILTERS



## Aster OC-1 filters

White laminated polyester and fibreglass filter. Internal parts with special sides for OC-1 media. Filter for side selector valve. ¼" air and water purge. Transparent lid with screws. Maximum temperature: 50 ºC Maximum working pressure of 2.5 kg/cm². Maximum filtration speed 50m³/h/m². Filter for OC-1 filtration media. Not compatible with sand, glass or other filter loads.

| | Code | Standard Pack | Standard Weight in kg | Standard Volume in m³ |
|---|---|---|---|---|
| **With multiport side valve** | | | | |
| OC-1 Aster filter 450 | **68642** | 1 | 21 | 0.23 |
| OC-1 Aster filter 500 | **68643** | 1 | 23 | 0.28 |
| OC-1 Aster filter 600 | **68644** | 1 | 28 | 0.39 |
| OC-1 Aster filter 650 | **68645** | 1 | 29 | 0.45 |
| OC-1 Aster filter 750 | **68646** | 1 | 37 | 0.62 |
| OC-1 Aster filter 900-2" | **68647** | 1 | 55 | 1.27 |
| **Without multiport valve** | | | | |
| OC-1 Aster filter 900-2½" | **68648** | 1 | 55 | 1.27 |

Complies with Standard
**EN 16713-01**

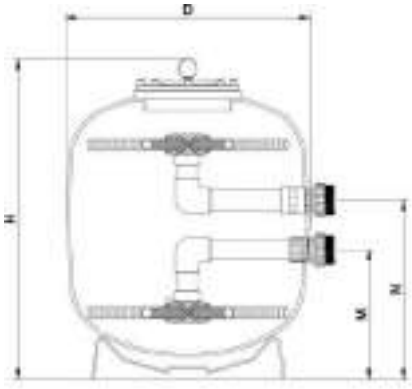


| | 68642 | 68643 | 68644 | 68645 | 68646 | 68647 | 68648 |
|---|---|---|---|---|---|---|---|
| **Ø D (mm)** | 450 | 500 | 600 | 650 | 750 | 900 | 900 |
| **H (mm)** | 845 | 855 | 900 | 955 | 1035 | 1100 | 1100 |
| **M (mm)** | 305 | 290 | 330 | 370 | 325 | 365 | 390 |
| **N (mm)** | 430 | 415 | 455 | 495 | 555 | 635 | 660 |
| **Connections** | 1½" | 1½" | 1½" | 1½" | 2" | 2" | 2½" |
| **Flow (m³/h) at 50 m³/h/m²** | 8 | 10 | 14 | 17 | 22 | 32 | 32 |
| **Maximum pressure (kg/cm²)** | 2.5 | 2.5 | 2.5 | 2.5 | 2.5 | 2.5 | 2.5 |
| **Pool volume (m³)** | 64 | 72 | 112 | 120 | 168 | 240 | 240 |
| **Filtration surface (m²)** | 0.159 | 0.196 | 0.283 | 0.332 | 0.442 | 0.636 | 0.636 |
| **OC-1 volume (L)** | 44 | 59 | 78 | 125 | 181 | 313 | 313 |
| **OC-1 (kg)** | 9 | 12 | 16 | 25 | 36 | 63 | 63 |
| **Net weight (kg)** | 18 | 20 | 25 | 26 | 33 | 50 | 50 |



Optional:
Standard American sizes

## INJECTION MOULDED SAND FILTERS

Injection-moulded filter in technical plastics. Ivory. Thermal-welded joining of top and bottom filter parts. Fitted with a pressure gauge and manual water and air purge valves. Selector valve included. Maximum filtration speed ($m^3/h/m^2$) Maximum working pressure: 2.5 $kg/cm^2$. Sand and glass compatible (see page 147). Complies with filtration requirements as per standard EN 16713-1.





### Cantabric top filters

Top mounted multiport valve. Threaded filter locking ring in ABS.

| | Code | Standard Pack | Standard Weight in kg | Standard Volume in $m^3$ |
|---|---|---|---|---|
| 6000 l/h Ø 400 mm outlet 1½" | **22399** | 1 | 10.7 | 0.23 |
| 9000 l/h Ø 500 mm outlet 1½" | **15780** | 1 | 17.5 | 0.37 |
| 14000 l/h Ø 600 mm outlet 1½" | **15781** | 1 | 19.9 | 0.49 |
| 21000 l/h Ø 750 mm outlet 1½" | **20128** | 1 | 30.4 | 0.83 |
| 21000 l/h Ø 750 mm outlet 2" | **23866** | 1 | 32.1 | 0.83 |



### Top mounted Cantabric filter

Clear lid & threaded locking ring in ABS, supplied with side mounted multiport valve.

| | Code | Standard Pack | Standard Weight in kg | Standard Volume in $m^3$ |
|---|---|---|---|---|
| **With multiport side valve** | | | | |
| 6.000 l/h Ø 400 mm outlet 1½" | **22398** | 1 | 9.0 | 0.15 |
| 9,000 l/h Ø 500 mm outlet 1½" | **15782** | 1 | 15.8 | 0.29 |
| 14,000 l/h Ø 600 mm outlet 1½" | **15783** | 1 | 17.8 | 0.40 |
| 21,000 l/h Ø 750 mm outlet 2" | **15784** | 1 | 29.0 | 0.67 |
| **Without multiport valve** | | | | |
| 30,000 l/h Ø 900 mm outlet 2½" | **22402** | 1 | 49.0 | 1.30 |

Complies with Standard
**EN 16713-01**

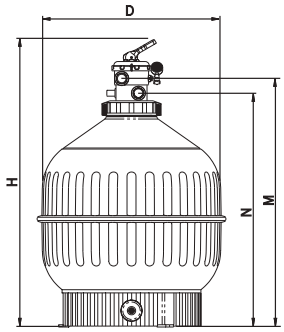


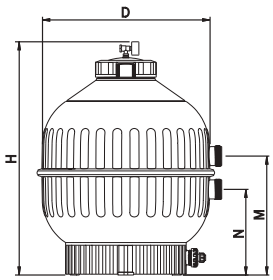


| | Top mounted | | | | | Side mounted | | | | |
|---|---|---|---|---|---|---|---|---|---|---|
| | **22399** | **15780** | **15781** | **20128** | **23866** | **22398** | **15782** | **15783** | **15784** | **22402** |
| **Ø D (mm)** | 400 | 500 | 600 | 750 | 750 | 400 | 500 | 600 | 750 | 900 |
| **H (mm)** | 894 | 1009 | 1069 | 1239 | 1250 | 715 | 800 | 875 | 1045 | 1215 |
| **M (mm)** | 744 | 829 | 894 | 1064 | 1098 | 380 | 415 | 445 | 575 | 675 |
| **N (mm)** | 680 | 765 | 830 | 1000 | 1023 | 255 | 290 | 320 | 345 | 405 |
| **Connections** | 1½" | 1½" | 1½" | 1½" | 2" | 1½" | 1½" | 1½" | 2" | 2½" |
| **Flow rate ($m^3/h$)** | 6 | 9 | 14 | 21 | 21 | 6 | 9 | 14 | 21 | 30 |
| **Approx. pool volume ($m^3$) (8 hours)*** | 48 | 72 | 112 | 168 | 168 | 48 | 72 | 112 | 168 | 240 |
| **Sand load (kg)** | 60 | 100 | 150 | 300 | 300 | 60 | 100 | 150 | 300 | 550 |
| **Grade 1 glass load (57011) (kg)** | 42 | 70 | 105 | 210 | 210 | 42 | 70 | 105 | 210 | 385 |
| **Grade 2 glass load (57012) (kg)** | 11 | 19 | 28 | 57 | 57 | 11 | 19 | 28 | 57 | 104 |
| **Net weight (kg)** | 8 | 14 | 15 | 23 | 25 | 7 | 12 | 14 | 24 | 34 |
| **Package volume ($m^3$)** | 0.2 | 0.37 | 0.49 | 0.83 | 0.83 | 0.15 | 0.29 | 0.4 | 0.67 | 1.3 |

Fitted with sand dump port of Ø 2" in Ø 750 mm & Ø 900 mm models, and of 1½" in Ø 400, Ø 500 & Ø 600 mm models.
* 8 hours turnover rate

+ info
Further information on **PRODUCTS**
**www.astralpool.com**

# BLOW-MOULDED SAND FILTERS

Complies with Standard
**EN 16713-01**

Blow-moulded in a single seamless piece of plastic. Fitted with a pressure gauge and integrated air purge and manual water drain. Selector valve included. Maximum working pressure: 2.5 kg/cm² for filter Ø 380 mm, Ø 430 mm and Ø 480 mm, and 2 kg/cm² for filter Ø 560 mm and Ø 660 mm Sand- and glass-compatible (see page 147). Complies with filtration requirements as per standard EN 16713-1.



## Millennium filters with Top mounted valve

| | Code | Standard Pack | Standard Weight in kg | Standard Volume in m³ |
|---|---|---|---|---|
| Ø 380 mm - 5500 l/h outlet 1½" | **33814** | 1 | 12.0 | 0.17 |
| Ø 430 mm - 7000 l/h outlet 1½" | **33815** | 1 | 14.0 | 0.17 |
| Ø 480 mm - 9000 l/h outlet 1½" | **33816** | 1 | 16.0 | 0.24 |
| Ø 560 mm - 12000 l/h outlet 1½" | **33817** | 1 | 17.0 | 0.35 |
| Ø 660 mm - 17000 l/h outlet 1½" | **33818** | 1 | 24.5 | 0.52 |

Optional:
Standard American sizes



## Millennium filters with side mounted valve

| | Code | Standard Pack | Standard Weight in kg | Standard Volume in m³ |
|---|---|---|---|---|
| Ø 380 mm - 5500 l/h outlet 1½" | **35321** | 1 | 10.5 | 0.13 |
| Ø 430 mm - 7000 l/h outlet 1½" | **22497** | 1 | 13.0 | 0.13 |
| Ø 480 mm - 9000 l/h outlet 1½" | **22499** | 1 | 16.0 | 0.18 |
| Ø 560 mm - 12000 l/h outlet 1½" | **22501** | 1 | 18.0 | 0.26 |
| Ø 660 mm - 17000 l/h outlet 1½" | **28254** | 1 | 29.0 | 0.42 |



## Millennium model monobloc with top mount MPV

| | Code | Standard Pack | Standard Weight in kg | Standard Volume in m³ |
|---|---|---|---|---|
| Ø 380 mm - Sena 1/3 HP 230 V II | **27805** | 1 | 27.0 | 0.33 |
| Ø 430 mm - Sena 1/3 HP 230 V II | **23342** | 1 | 27.0 | 0.33 |
| Ø 480 mm - Sena ½ HP 230 V II | **23343** | 1 | 31.0 | 0.43 |
| Ø 560 mm - Sena ¾ HP 230 V II | **23344** | 1 | 35.0 | 0.50 |
| Ø 660 mm - Sena 1.25 HP | **28299** | 1 | 41.0 | 0.59 |



## Millennium model monobloc with side mount MPV

| | Code | Standard Pack | Standard Weight in kg | Standard Volume in m³ |
|---|---|---|---|---|
| Ø 380 mm - Sena 1/3 HP 230 V II | **27804** | 1 | 28.0 | 0.33 |
| Ø 430 mm - Sena 1/3 HP 230 V II | **23348** | 1 | 28.0 | 0.33 |
| Ø 480 mm - Sena ½ HP 230 V II | **23349** | 1 | 31.0 | 0.43 |
| Ø 560 mm - Sena ¾ HP 230 V II | **23350** | 1 | 35.0 | 0.50 |
| Ø 660 mm - Sena 1.25 HP | **28301** | 1 | 41.0 | 0.59 |

# BLOW-MOULDED SAND FILTERS

## Millennium filters

**Top mounted**



**Side mounted**



**Top mounted monobloc**



**Side mounted monobloc**



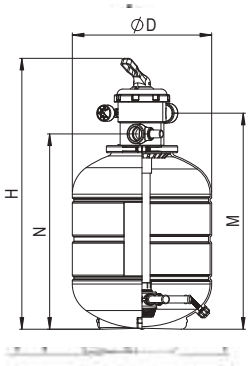


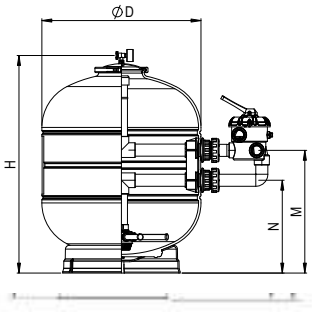


C

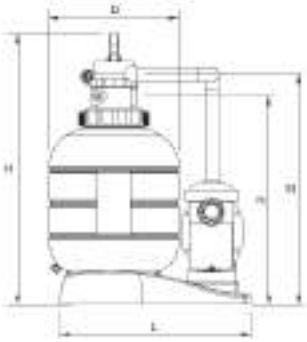

D

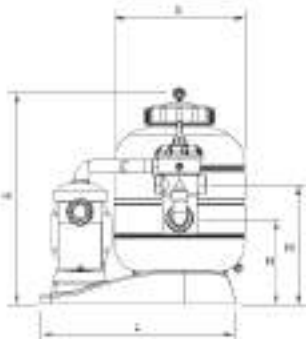

| | A - Top mounted filter | | | | | B - Side mounted filter | | | | | C - Top mounted monobloc | | | | | D - Side mounted monobloc | | | | |
|---|---|---|---|---|---|---|---|---|---|---|---|---|---|---|---|---|---|---|---|---|
| | 33814 | 33815 | 33816 | 33817 | 33818 | 35321 | 22497 | 22499 | 22501 | 28254 | 27805 | 23342 | 23343 | 23344 | 28299 | 27804 | 23348 | 23349 | 23350 | 28301 |
| Ø D (mm) | 380 | 430 | 480 | 560 | 660 | 380 | 430 | 480 | 560 | 660 | 380 | 430 | 480 | 560 | 660 | 380 | 430 | 480 | 560 | 660 |
| H (mm) | 820 | 835 | 870 | 945 | 1050 | 615 | 655 | 682 | 770 | 900 | 905 | 955 | 975 | 1055 | 1125 | 685 | 735 | 745 | 830 | 962 |
| M (mm) | 650 | 665 | 700 | 775 | 880 | 225 | 265 | 292 | 380 | 510 | 735 | 815 | 835 | 915 | 990 | 390 | 415 | 410 | 460 | 570 |
| N (mm) | 585 | 600 | 635 | 710 | 815 | 100 | 140 | 167 | 255 | 385 | 670 | 735 | 755 | 815 | 925 | 265 | 290 | 285 | 335 | 510 |
| Length L (mm) | - | - | - | - | - | - | - | - | - | - | 710 | 715 | 835 | 835 | 835 | 710 | 715 | 835 | 835 | 835 |
| Connections | 1½" | 1½" | 1½" | 1½" | 1½" | 1½" | 1½" | 1½" | 1½" | 1½" | 1½" | 1½" | 1½" | 1½" | 1½" | 1½" | 1½" | 1½" | 1½" | 1½" |
| Flow rate (m³/h) | 5.5 | 7 | 9 | 12 | 17 | 5.5 | 7 | 9 | 12 | 17 | 5.5 | 7 | 9 | 12 | 17 | 5.5 | 7 | 9 | 12 | 17 |
| Pool volume approx. (m³) | up to 40 | 40-50 | 50-75 | 75-100 | 140 | up to 40 | 40-50 | 50-75 | 75-100 | 140 | up to 40 | 40-50 | 50-75 | 75-100 | 140 | up to 40 | 40-50 | 50-75 | 75-100 | 140 |
| Sand load (kg) | ± 45 | ± 70 | ± 80 | ± 110 | ± 180 | ± 45 | ± 70 | ± 80 | ± 110 | ± 180 | 40 | 60 | 85 | 135 | 180 | 40 | 60 | 85 | 135 | 180 |
| Grade 1 glass load (57011) (kg) | 28 | 42 | 60 | 95 | 175 | 28 | 42 | 60 | 95 | 175 | 28 | 42 | 60 | 95 | 175 | 28 | 42 | 60 | 95 | 175 |
| Grade 2 glass load (57012) (kg) | 8 | 11 | 16 | 25 | 47 | 8 | 11 | 16 | 25 | 47 | 8 | 11 | 16 | 25 | 47 | 8 | 11 | 16 | 25 | 47 |
| Maximum pressure (kg/cm²) | 2.5 | 2.5 | 2.5 | 2 | 2 | 2.5 | 2.5 | 2.5 | 2 | 2 | 2.5 | 2.5 | 2.5 | 2 | 2 | 2.5 | 2.5 | 2.5 | 2 | 2 |
| Net weight (kg) | 12 | 13.5 | 15 | 16.5 | 24 | 10 | 12 | 15 | 17.5 | 28 | 27 | 27 | 31 | 35 | 41 | 28 | 28 | 31 | 35 | 41 |
| Package volume (m³) | 0.17 | 0.17 | 0.24 | 0.35 | 0.52 | 0.13 | 0.13 | 0.18 | 0.26 | 0.42 | 0.33 | 0.33 | 0.43 | 0.50 | 0.59 | 0.33 | 0.33 | 0.43 | 0.50 | 0.59 |

| | Millennium / Sena | | | | |
|---|---|---|---|---|---|
| **Side monobloc** | **27804** | **23348** | **23349** | **23350** | **28301** |
| **Top monobloc** | **27805** | **23342** | **23343** | **23344** | **28299** |
| **Ø (mm)** | 380 | 430 | 480 | 560 | 660 |
| **Pump** | Sena | Sena | Sena | Sena | Sena |
| **Power (HP)** | 1/3 | 1/3 | ½ | ¾ | 1.25 |
| **Voltage (V)** | 230 II | 230 II | 230 II | 230 II | 230 II |
| **Frequency (Hz)** | 50 | 50 | 50 | 50 | 50 |

+ info
Further information on **PRODUCTS**
**www.astralpool.com**

# BLOW-MOULDED SAND FILTERS



## SkyPool filter monoblock with top outlet

Made from plastic with a clamp lid, multi-way valve, pressure gauge, manual air outlet and water purge. White. Injection-moulded black base. Maximum working pressure: 2 kg/cm$^2$. Complies with filtration requirements as per standard EN 16713-1.

| | Code | Standard Pack | Standard Weight in kg | Standard Volume in m$^3$ |
|---|---|---|---|---|
| Ø 300 mm - P-XPERT-4 | **M00504** | 1 | 12 | 0.11 |
| Ø 400 mm - P-XPERT-6 | **M00505** | 1 | 14 | 0.22 |
| Ø 400 mm - P-XPERT-8 | **M00506** | 1 | 15 | 0.22 |
| Ø 500 mm - P-XPERT-10 | **M00507** | 1 | 21 | 0.34 |
| Ø 500 mm - P-XPERT-14 | **M00661** | 1 | 25 | 0.34 |

Complies with Standard
**EN 16713-01**

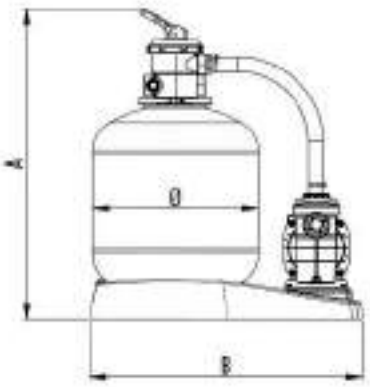


| | SkyPool / P-XPERT | | | | |
|---|---|---|---|---|---|
| **Top monobloc** | **M00504** | **M00505** | **M00506** | **M00507** | **M00661** |
| **A (mm)** | 640 | 760 | 760 | 870 | 870 |
| **B (mm)** | 520 | 830 | 830 | 830 | 830 |
| **Ø (mm)** | 300 | 400 | 400 | 500 | 500 |
| **Pump (HP)** | P-XPERT4 | P-XPERT6 | P-XPERT8 | P-XPERT10 | P-XPERT14 |
| **Connections** | Ø 38 | Ø 38 | Ø 38 | 1½" | 1½" |
| **Flow (m$^3$/h)** | 4 | 6 | 7 | 9 | 11 |
| **Power (W)** | 150 | 340 | 490 | 600 | 660 |
| **Filtration speed (m$^3$/m$^2$/h)** | 60 | 50 | 60 | 50 | 60 |
| **Sand 0.4-0.8 mm (Kg)** | ± 25 | ± 40 | ± 40 | ± 100 | ± 100 |
| **Weight (Kg)** | 12 | 14 | 15 | 21 | 25 |
| **Volume (m$^3$)** | 0.102 | 0.226 | 0.226 | 0.344 | 0.344 |

# LAMINATED SAND FILTERS

Filters manufactured in fibreglass and polyester resin. With a gelcoat external finish. As a result, the body is highly resistant, durable and has an excellent finish. Internal components and accessories in high quality engineering plastics. Compatible with sand and glass, among others (see page 147). They comply with filtration requirements as per standard EN 16713-1.



Complies with Standard
**EN 16713-01**

## Atlas filter

Sand and glass filters, among others, made from reinforced polyester. Complies with filtration requirements as per standard EN 16713-1.

**Technical features:**

- Made of polyester resin and fibreglass.
- Excellent finish with gel-coat colour RAL 8029.
- The filter has been designed with higher coefficient of security, to guarantee a perfect operation.
- The union of the two bodies of the filter is carried out through a seal specially reinforced with fibreglass and polyester resin.
- Transparent plastic cover highly resistant to chemicals.
- High reliability screw-in cover.
- Fitted with 1" collector arms and diffuser made from unplasticized PVC.
- Interior pipe with tubes of PN-16.
- 2½" sand discharge outlet.
- Fitted with pressure gauge, air purge and manual water drain.
- Connections to multiport valve with six positions: filter, backwash, rinse, recirculate, waste and closed.
- Innovation by AstralPool: the filter has a built-in safety valve to prevent pressure surges.
- Maximum pressure: 2.5 kg/cm$^2$.

| | Code | Pack. Standard | Weight kg Standard* | Volume in m$^3$ Standard* |
|---|---|---|---|---|
| **Includes multiport valve** | | | | |
| Ø 500 mm outlet 1½" | **36596** | 1 | 20 | 0.29 |
| Ø 600 mm outlet 1½" | **36597** | 1 | 25 | 0.41 |
| Ø 750 mm outlet 2" | **36598** | 1 | 33 | 0.77 |
| **Multiport valve not included** | | | | |
| Ø 900 mm outlet 2½" | **36599** | 1 | 51 | 1.23 |

* Figures without valve

| Code | 36596 | 36597 | 36598 | 36599 |
|---|---|---|---|---|
| Ø Filter (mm) | 500 | 600 | 750 | 900 |
| Connections | 1$^1/_2$" | | 2" | 2$^1/_2$" |
| Filtering surface (m$^2$) | 0.19 | 0.30 | 0.44 | 0.64 |
| Filtering velocity (m$^3$/h/m$^2$) | 50 | | | |
| Flow rate (m$^3$/h) | 9.5 | 15 | 22 | 30 |
| Maximum pressure (kg/cm$^2$) | 2,5 | | | |
| Sand load (kg) | 120 | 190 | 360 | 580 |
| Grade 1 glass load (57011) (kg) | 84 | 133 | 252 | 406 |
| Grade 2 glass load (57012) (kg) | 23 | 36 | 68 | 110 |
| Net weight (kg) | 20 | 25 | 33 | 51 |

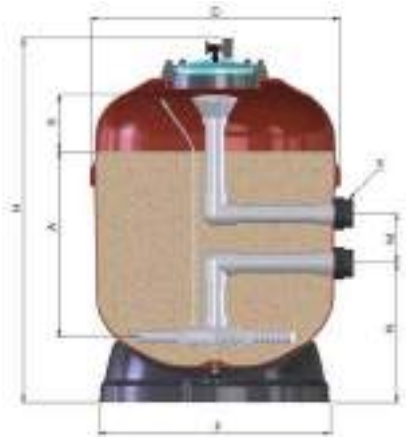







Sand drain of 2 ½" and water drain of ¾" with security valve.

+ info
Further information on **PRODUCTS**
www.astralpool.com

# LAMINATED SAND FILTERS

## Europe Pro - Pro Long filters

Filters manufactured in fibreglass and polyester resin Complies with filtration requirements as per standard EN 16713-1. Sand and glass compatible (see page 147).

- Filter colour (Ral5015)
- ¼" purge valve.
- 2 ½" sand discharge
- Polyester or methacrylate cover with screws.
- Diameter of top access: 285 mm.
- Maximum pressure: 2.5 bar.



64990



64986



64998



64994

| | Code | Pack. Standard | Weight kg Standard* | Volume in m³ Standard* |
|---|---|---|---|---|
| **Pro version** | | | | |
| **With methacrylate cover** | | | | |
| 9500 l/h Ø 500 mm output 1½" | **64990** | 1 | 15 | 0.33 |
| 15000 l/h Ø 600 mm output 2" | **64991** | 1 | 20 | 0.45 |
| 22000 l/h Ø 750 mm output 2" | **64992** | 1 | 25 | 0.83 |
| 30000 l/h Ø 900 mm output 2½" | **64993** | 1 | 46 | 1.43 |
| **With polyester cover** | | | | |
| 9500 l/h Ø 500 mm output 1½" | **64986** | 1 | 15 | 0.33 |
| 15000 l/h Ø 600 mm output 2" | **64987** | 1 | 20 | 0.45 |
| 22000 l/h Ø 750 mm output 2" | **64988** | 1 | 25 | 0.83 |
| 30000 l/h Ø 900 mm output 2½" | **64989** | 1 | 46 | 1.43 |
| **Pro Long version** | | | | |
| **With methacrylate cover** | | | | |
| 9500 l/h Ø 500 mm output 1½" | **64998** | 1 | 23 | 0.33 |
| 15000 l/h Ø 600 mm output 2" | **64999** | 1 | 26 | 0.45 |
| 22000 l/h Ø 750 mm output 2" | **65000** | 1 | 34 | 0.83 |
| 30000 l/h Ø 900 mm output 2½" | **65002** | 1 | 65 | 1.43 |
| **With polyester cover** | | | | |
| 9500 l/h Ø 500 mm output 1½" | **64994** | 1 | 23 | 0.33 |
| 15000 l/h Ø 600 mm output 2" | **64995** | 1 | 26 | 0.45 |
| 22000 l/h Ø 750 mm output 2" | **64996** | 1 | 34 | 0.83 |
| 30000 l/h Ø 900 mm output 2½" | **64997** | 1 | 65 | 1.43 |

* Figures without valve

| | Pro version | | | | Pro Long version | | | |
|---|---|---|---|---|---|---|---|---|
| **With methacrylate cover** | **64990** | **64991** | **64992** | **64993** | **64998** | **64999** | **65000** | **65002** |
| **With polyester cover** | **64986** | **64987** | **64988** | **64989** | **64994** | **64995** | **64996** | **64997** |
| **Ø D (mm)** | 500 | 600 | 750 | 900 | 500 | 600 | 750 | 900 |
| **Connection** | 1 1/2" | 2" | 2" | 2 1/2" | 1 1/2" | 2" | 2" | 2 1/2" |
| **Selector valve code** | **00599** | **28476** | **28512** | **24837** | **00599** | **28476** | **28512** | **24837** |
| **Filtration surface area (m²)** | 0.19 | 0.3 | 0.44 | 0.64 | 0.19 | 0.3 | 0.44 | 0.64 |
| **Filtration velocity (m³/h/m²)** | 50 | | | | 50 | | | |
| **Flow (m³/h) at 50 m³/h/m²** | 9.5 | 15 | 22 | 30 | 9.5 | 15 | 22 | 30 |
| **Maximum pressure (kg/cm²)** | 2.5 | | | | 2.5 | | | |
| **Sand load (kg)** | 120 | 190 | 360 | 580 | 155 | 240 | 430 | 615 |
| **Grade 1 glass load (57011) (kg)** | 84 | 133 | 252 | 406 | 110 | 170 | 305 | 435 |
| **Grade 2 glass load (57012) (kg)** | 23 | 36 | 68 | 110 | 27 | 44 | 77 | 112 |
| **Net weight (kg)** | 15 | 20 | 25 | 46 | 20 | 25 | 33 | 51 |
| **Depth of filter bed (mm)** | 390 | 445 | 530 | 645 | 520 | 565 | 620 | 680 |

Complies with Standard
**EN 16713-01**

Filtration bed
0.6 m

# LAMINATED SAND FILTERS



Complies with Standard
EN 16713-01

## RapidPool filters

Laminated in reinforced polyester with fibreglass. Red, polypropylene base, screw-free lid, cap for sand and water discharge, pressure gauge and air purge incorporated in the lid and side selector valve. Maximum filtration speed 50/h/m². Maximum working pressure: 2.5 kg/cm². Sand and glass compatible (see page 147).).

| | Code | Standard Pack | Standard Weight in kg | Standard Volume in m³ |
|---|---|---|---|---|
| **Top mounted valve version** | | | | |
| 6000 l/h Ø 400 mm outlet 1½" | **32427** | 1 | 19 | 0.200 |
| 9000 l/h Ø 500 mm outlet 1½" | **32428** | 1 | 25 | 0.355 |
| 15000 l/h Ø 650 mm outlet 1½" | **32429** | 1 | 34 | 0.600 |
| 24000 l/h Ø 800 mm outlet 2" | **33849** | 1 | 45 | 1.050 |
| **Side mounted valve version** | | | | |
| 6000 l/h Ø 400 mm outlet 1½" | **00488** | 1 | 19 | 0.150 |
| 9000 l/h Ø 500 mm outlet 1½" | **00489** | 1 | 25 | 0.280 |
| 15000 l/h Ø 650 mm outlet 1½" | **00490** | 1 | 34 | 0.500 |
| 24000 l/h Ø 800 mm outlet 2" | **00491** | 1 | 45 | 0.880 |

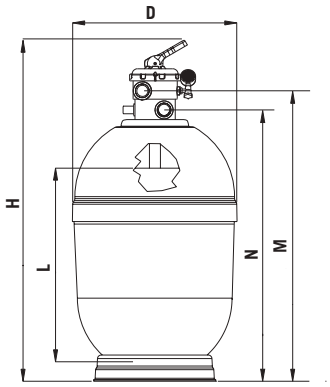


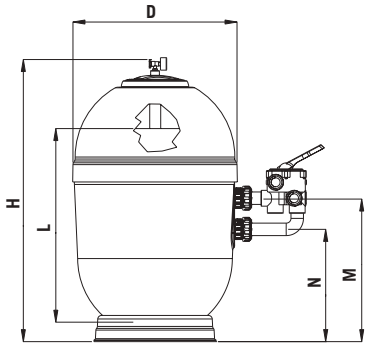


| | With Top mounted multiport valve | | | | With multiport valve | | | |
|---|---|---|---|---|---|---|---|---|
| | **32427** | **32428** | **32429** | **33849** | **00488** | **00489** | **00490** | **00491** |
| **Ø Filter (mm)** | 400 | 500 | 650 | 800 | 400 | 500 | 650 | 800 |
| **H (mm)** | 1020 | 1165 | 1285 | 1566 | 860 | 1032 | 1126 | 1272 |
| **M (mm)** | 850 | 995 | 1115 | 1355 | 442 | 527 | 552 | 592 |
| **N (mm)** | 790 | 935 | 1055 | 1279 | 317 | 402 | 427 | 362 |
| **Connections** | 1½" | 1½" | 1½" | 2" | 1½" | 1½" | 1½" | 2" |
| **Flow (m³/h) at 50 m³/h/m²** | 6 | 9 | 15 | 24 | 6 | 9 | 15 | 24 |
| **Pool volume (m³) (8 h)** | 48 | 72 | 120 | 120 | 48 | 72 | 120 | 192 |
| **Sand load (kg)** | 60 | 130 | 255 | 445 | 60 | 130 | 255 | 445 |
| **Grade 1 glass load (57011) (kg)** | 42 | 91 | 179 | 312 | 42 | 91 | 179 | 312 |
| **Grade 2 glass load (57012) (kg)** | 11 | 25 | 48 | 84 | 11 | 25 | 48 | 84 |
| **Sand height (mm)** | 545 | 571 | 650 | 785 | 545 | 571 | 650 | 785 |
| **Maximum pressure (kg/cm²)** | 2.5 | 2.5 | 2.5 | 2.5 | 2.5 | 2.5 | 2.5 | 2.5 |
| **Net weight (kg)** | 19 | 25 | 34 | 44 | 15 | 22 | 30 | 45 |
| **Package volume (m³)** | 0.20 | 0.355 | 0.60 | 1.05 | 0.16 | 0.3 | 0.53 | 0.9 |

+ info
Further information on **PRODUCTS**
**www.astralpool.com**

# LAMINATED SAND FILTERS







## Aster filters

Filter laminated in polyester and fibreglass. Grey, polypropylene base, new screw-free lid, cap for sand and water discharge, pressure gauge and side selector valve. Maximum working pressure of 2.5 kg/cm². Maximum filtration speed 50/h/m². Complies with filtration requirements as per standard EN 16713-1. Sand and glass compatible (see page 147).

| | Code | Standard Pack | Standard Weight in kg | Standard Volume in m³ |
|---|---|---|---|---|
| **With top mounted multiport valve** | | | | |
| 5000 l/h Ø 350 mm outlet 1½" | **30768** | 1 | 17 | 0.13 |
| 8000 l/h Ø 450 mm outlet 1½" | **30769** | 1 | 20 | 0.23 |
| 9000 l/h Ø 500 mm outlet 1½" | **30770** | 1 | 22 | 0.28 |
| 14000 l/h Ø 600 mm outlet 1½" | **30771** | 1 | 27 | 0.39 |
| 15000 l/h Ø 650 mm outlet 1½" | **30772** | 1 | 28 | 0.45 |
| 21000 l/h Ø 750 mm outlet 2" | **33847** | 1 | 35 | 0.62 |
| 32000 l/h Ø 900 mm outlet 2" | **33848** | 1 | 53 | 1.27 |
| **With side mounted multiport valve** | | | | |
| 5000 l/h Ø 350 mm outlet 1½" | **00497** | 1 | 18 | 0.13 |
| 8000 l/h Ø 450 mm outlet 1½" | **00498** | 1 | 21 | 0.23 |
| 9000 l/h Ø 500 mm outlet 1½" | **19781** | 1 | 23 | 0.28 |
| 12000 l/h Ø 550 mm outlet 1½" | **32706** | 1 | 27 | 0.28 |
| 14000 l/h Ø 600 mm outlet 1½" | **00499** | 1 | 28 | 0.39 |
| 15000 l/h Ø 650 mm outlet 1½" | **21071** | 1 | 29 | 0.45 |
| 18000 l/h Ø 680 mm outlet 1½" | **28479** | 1 | 30 | 0.46 |
| 21000 l/h Ø 750 mm outlet 2" | **00500** | 1 | 37 | 0.62 |
| 32000 l/h Ø 900 mm outlet 2" | **08133** | 1 | 55 | 1.27 |
| **Without multiport valve** | | | | |
| 31000 l/h Ø 900 mm outlet 2½" | **00501** | 1 | 53 | 1.27 |

Complies with Standard
**EN 16713-01**

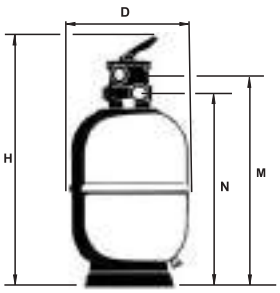


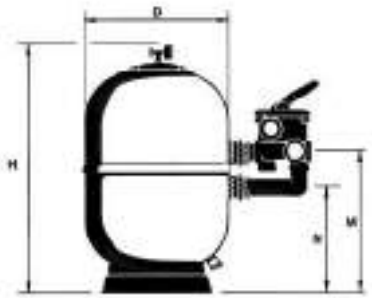


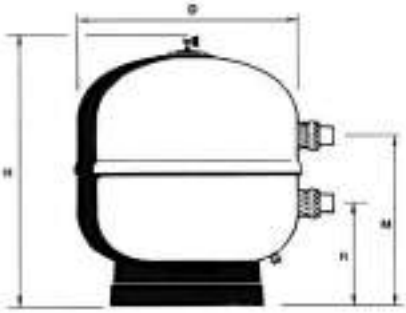


| | With Top mounted multiport valve | | | | | | | With multiport valve | | | | | | | | | Without valve |
|---|---|---|---|---|---|---|---|---|---|---|---|---|---|---|---|---|---|
| | 30768 | 30769 | 30770 | 30771 | 30772 | 33847 | 33848 | 00497 | 00498 | 19781 | 32706 | 00499 | 21071 | 28479 | 00500 | 08133 | 00501 |
| **Ø D (mm)** | 350 | 450 | 500 | 600 | 650 | 750 | 900 | 350 | 450 | 500 | 550 | 600 | 650 | 680 | 750 | 900 | 900 |
| **H (mm)** | 910 | 965 | 960 | 1005 | 1060 | 1184 | 1344 | 780 | 795 | 770 | 825 | 850 | 880 | 915 | 945 | 1050 | 1050 |
| **M (mm)** | 740 | 795 | 790 | 835 | 890 | 973 | 1133 | 420 | 430 | 415 | 455 | 455 | 480 | 525 | 555 | 635 | 660 |
| **N (mm)** | 680 | 785 | 730 | 775 | 830 | 897 | 1057 | 295 | 305 | 290 | 330 | 330 | 355 | 400 | 325 | 365 | 390 |
| **Connections** | 1½" | 1½" | 1½" | 1½" | 1½" | 2" | 2" | 1½" | 1½" | 1½" | 1½" | 1½" | 1½" | 1½" | 2" | 2" | 2½" |
| **Flow (m³/h) at 50 m³/h/m²** | 5 | 8 | 9 | 14 | 15 | 21 | 31 | 5 | 8 | 9 | 12 | 14 | 15 | 18 | 21 | 30 | 30 |
| **Pool volume (m³) (8 h)** | 40 | 64 | 72 | 112 | 120 | 168 | 240 | 40 | 64 | 72 | 96 | 112 | 120 | 144 | 168 | 240 | 240 |
| **Sand load (kg)** | 50 | 70 | 90 | 110 | 200 | 290 | 500 | 50 | 70 | 90 | 110 | 125 | 200 | 210 | 290 | 500 | 500 |
| **Grade 1 glass load (57011) (kg)** | 35 | 49 | 63 | 77 | 140 | 203 | 350 | 35 | 49 | 63 | 77 | 88 | 140 | 147 | 203 | 350 | 350 |
| **Grade 2 glass load (57012) (kg)** | 9 | 13 | 17 | 21 | 38 | 55 | 94 | 9 | 13 | 17 | 21 | 24 | 38 | 40 | 258 | 94 | 94 |
| **Maximum pressure (kg/cm²)** | 2.5 | 2.5 | 2.5 | 2.5 | 2.5 | 2.5 | 2.5 | 2.5 | 2.5 | 2.5 | 2.5 | 2.5 | 2.5 | 2.5 | 2.5 | 2.5 | 2.5 |
| **Net weight (kg)** | 17 | 20 | 22 | 27 | 28 | 35 | 53 | 18 | 21 | 23 | 27 | 28 | 29 | 30 | 37 | 55 | 53 |
| **Package volume (m³)** | 0.13 | 0.23 | 0.28 | 0.39 | 0.45 | 0.62 | 1.27 | 0.13 | 0.23 | 0.28 | 0.28 | 0.39 | 0.45 | 0.46 | 0.62 | 1.26 | 1.27 |

# LAMINATED SAND FILTERS





## Vesubio filters

The Vesubio range has been expanded to reach both the public and private pool sectors. Filters manufactured using simultaneous projection of resin and fibreglass. Threaded lid with high-resistance screws. Ø 210mm top mouth. Ø 1050mm and Ø 1200mm models also available with a top mouth of Ø 400mm. Maximum working pressure of 2.5 kg/cm$^2$. Sand and glass compatible (see page 147).

| | Code | Standard Pack | Standard Weight in kg | Standard Volume in m$^3$ |
|---|---|---|---|---|
| **Side mount version** | | | | |
| 8000 l/h Ø 450 mm outlet 50 mm | **15785** | 1 | 16 | 0.200 |
| 9000 l/h Ø 500 mm outlet 50 mm | **19353** | 1 | 20 | 0.260 |
| 14000 l/h Ø 600 mm outlet 50 mm | **15786** | 1 | 23 | 0.357 |
| 22000 l/h Ø 750 mm outlet 63 mm | **15787** | 1 | 32 | 0.595 |
| 32000 l/h Ø 900 mm outlet 75 mm | **15788** | 1 | 48 | 1.003 |
| 43000 l/h Ø 1050* mm outlet 75 mm | **15789** | 1 | 97 | 2.052 |
| 43000 l/h Ø 1050* mm outlet 75 mm | **32391** | 1 | 97 | 2.052 |
| 56000 l/h Ø 1200* mm outlet 90 mm | **15790** | 1 | 130 | 2.450 |
| 56000 l/h Ø 1200* mm outlet 90 mm | **32392** | 1 | 140 | 2.430 |
| **Top mount version** | | | | |
| 8000 l/h Ø 450 mm outlet 50 mm | **32430** | 1 | 19 | 0.280 |
| 9000 l/h Ø 500 mm outlet 50 mm | **32431** | 1 | 23 | 0.350 |
| 14000 l/h Ø 600 mm outlet 50 mm | **32432** | 1 | 26 | 0.480 |
| 22000 l/h Ø 750 mm outlet 63 mm | **33850** | 1 | 40 | 0.787 |
| 32000 l/h Ø 900 mm outlet 63 mm | **33851** | 1 | 56 | 1.276 |

* Small upper lid of Ø 210 mm
** Upper lid of Ø 400 mm

**Filters with a side connection up to Ø 1050mm can use a multiport selector valve (see page 145).**
**Ø 900 and Ø 1050 mm filters with side outlets are supplied without multiport valve.**

Complies with Standard
**EN 16713-01**

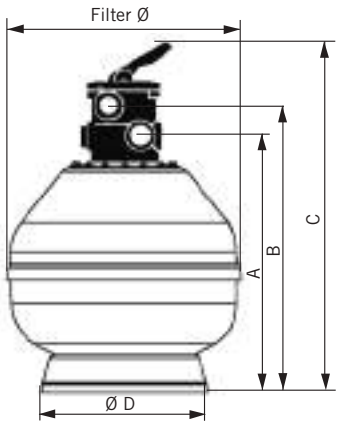


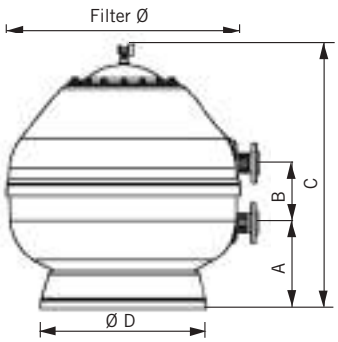


| | With Top mounted multiport valve | | | | | With multiport valve | | | | | | | | |
|---|---|---|---|---|---|---|---|---|---|---|---|---|---|---|
| | 32430 | 32431 | 32432 | 33850 | 33851 | 15785 | 19353 | 15786 | 15787 | 15788 | 15789 | 32391 | 15790 | 32392 |
| **Ø Filter (mm)** | 450 | 500 | 600 | 750 | 900 | 450 | 500 | 600 | 750 | 900 | 1050 | 1050 | 1200 | 1200 |
| **A (mm)** | 650 | 690 | 790 | 837 | 987 | 265 | 305 | 325 | 300 | 325 | 435 | 410 | 490 | 490 |
| **B (mm)** | 710 | 750 | 850 | 913 | 1063 | 125 | 125 | 125 | 230 | 270 | 270 | 270 | 270 | 270 |
| **C (mm)** | 880 | 920 | 1020 | 1124 | 1274 | 725 | 765 | 865 | 895 | 1080 | 1110 | 1235 | 1235 | 1360 |
| **D (mm)** | 347 | 400 | 400 | 490 | 625 | 347 | 400 | 400 | 490 | 625 | 760 | 775 | 855 | 940 |
| **Filtration surface area (m$^2$)** | 0.16 | 0.19 | 0.30 | 0.44 | 0.64 | 0.16 | 0.19 | 0.30 | 0.44 | 0.64 | 0.86 | 0.86 | 1.13 | 1.13 |
| **Connections** | 1$^1/_2$" | 1$^1/_2$" | 1$^1/_2$" | 2" | 2" | 1$^1/_2$" | 1$^1/_2$" | 1$^1/_2$" | 2" | 2$^1/_2$" | 2$^1/_2$" | 2$^1/_2$" | 90 | 90 |
| **Flow (m$^3$/h) at 50 m$^3$/h/m$^2$** | 8 | 9 | 14 | 22 | 32 | 8 | 9 | 14 | 22 | 32 | 43 | 43 | 6 | 56 |
| **Pool volume (m$^3$) (8 hours)** | 64 | 72 | 112 | 176 | 256 | 64 | 72 | 112 | 176 | 256 | 344 | 344 | 448 | 448 |
| **Sand (kg)** | 60 | 95 | 148 | 245 | 415 | 60 | 95 | 148 | 245 | 415 | 660 | 660 | 1000 | 1000 |
| **Sand load (kg)** | 60 | 95 | 148 | 245 | 415 | 60 | 95 | 148 | 245 | 415 | 660 | 660 | 1000 | 1000 |
| **Grade 1 glass load (57011) (kg)** | 42 | 67 | 104 | 172 | 291 | 42 | 67 | 104 | 172 | 291 | 347 | 347 | 525 | 525 |
| **Grade 2 glass load (57012) (kg)** | - | - | - | - | - | - | - | - | - | - | 113 | 113 | 172 | 172 |
| **Grade 2 glass load (57012) (kg)** | 11 | 18 | 28 | 46 | 78 | 11 | 18 | 28 | 46 | 78 | 125 | 125 | 189 | 189 |

+ info
Further information on **PRODUCTS**
**www.astralpool.com**

# HIGH-PERFORMANCE LAMINATED SAND FILTERS

**Filtration bed 1.2 m**

Laminated filters with higher filter bed for enhanced performance and filtration quality, both for single-layer and multi-layer filters. There are various options to help choose the model that best suits usage and maintenance requirements. Compatible with sand, glass and anthracite, among others (see page 148). They comply with filtration requirements as per standard EN 16713-1.



Complies with Standard
**EN 16713-01**

## Norma filters

Filter laminated in fibreglass-reinforced polyester (FRP). For single layer or multilayer filling. Maximum working pressure of 2.5 kg/cm². The Norma filter is designed according to Germany's DIN 19643/19605 standard. Available with a plate collector system (0.5 mm slot) including a manhole cover for inspection of the bottom. Fitted with a sight glass, Ø 200mm top lid for loading sand and Ø 200mm or Ø 400mm side mouth depending on model. Fitted with pressure gauge, air purge and manual water drain. Interiors in PVC and PP. A4 screws and EPDM gaskets. Standard colour: ivory. Options. Vinyl ester coating (ozone resistant, concentrations <0.4 ppm and max. temp 40ºC). Sand and glass compatible (see page 147).

**Maximum pressure: 2.5 kg/cm².**

| Diameter Ø mm | Filtration velocity | Outlet Ø mm | Flow rate m³/h at 30 m³/h/m² | Code | Standard Packaging | Standard Weight Kg | Standard Volume m³ |
|---|---|---|---|---|---|---|---|
| **650** | 30 | 90-75 | 10 | **08142P** | 1 | 100 | 1.33 |
| **800** | 30 | 90-75 | 15 | **08143P** | 1 | 125 | 2.00 |
| **1.000** | 30 | 140-110 | 23 | **08144P** | 1 | 145 | 3.00 |
| **1.200** | 30 | 140-140 | 34 | **08145P** | 1 | 177 | 5.50 |

Ø 650 mm
Ø 800 mm

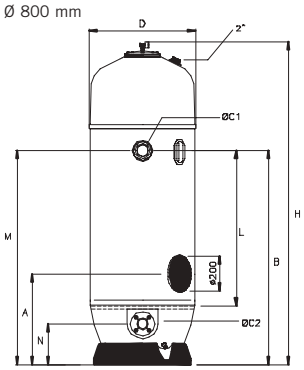


Ø 1000 mm

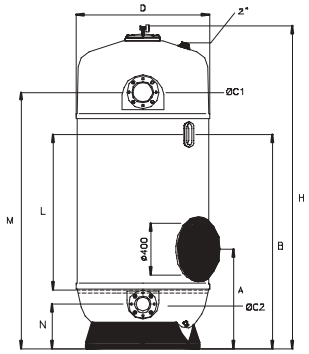


Ø 1200 mm

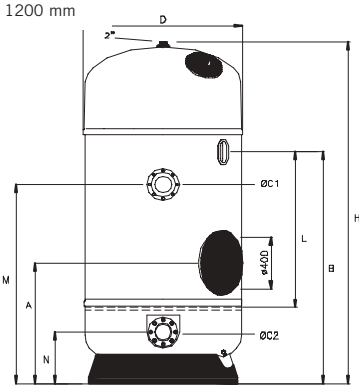




## TECHNICAL FEATURES

| | | 08142P | 08143P | 08144P | 08145P |
|---|---|---|---|---|---|
| **D (mm)** | | 650 | 800 | 1000 | 1200 |
| **A (mm)** | | 680 | 700 | 770 | 950 |
| **B (mm)** | | 1660 | 1640 | 1655 | 1790 |
| **H (mm)** | | 2480 | 2480 | 2490 | 2640 |
| **L (mm)** | | 1200 | 1200 | 1200 | 1200 |
| **M (mm)** | | 1650 | 1650 | 1980 | 1600 |
| **N (mm)** | | 320 | 320 | 340 | 400 |
| **Ø C1 (mm)** | | 90 | 90 | 140 | 140 |
| **Ø C2 (mm)** | | 75 | 75 | 110 | 140 |
| **Flow (m³/h) at 30 m³/h/m²** | | 10 | 15 | 23 | 33 |
| MULTILAYER | **Anthracite 0.8 – 1.6 mm (l)** | 148 | 250 | 390 | 564 |
| | **Sand 0.4 – 0.8 mm (Kg)** | 160 | 271 | 420 | 611 |
| | **Gravel 1 – 2 mm (Kg)** | 46 | 78 | 120 | 175 |
| | **Gravel 3 – 5 mm (Kg)** | 46 | 78 | 120 | 175 |
| SINGLE LAYER | **Sand load (kg)** | 451 | 767 | 1215 | 1763 |
| | **Gravel load (kg)** | 46 | 78 | 120 | 175 |
| | **Grade 1 glass load (57011) (kg)** | 346 | 589 | 698 | 1013 |
| | **Grade 2 glass load (57012) (kg)** | - | - | 228 | 331 |
| | **Grade 2 glass load (57012) (kg)** | 93 | 159 | 251 | 364 |

Filtration bed
1.2 m

# HIGH-PERFORMANCE LAMINATED SAND FILTERS

## Delta 1200 filters



Complies with Standard
**EN 16713-01**

Filter laminated in polyester and fibreglass available in diameters of 650, 800, 1000 and 1200 mm. It has a 1.2-m filter bed and is available with an arm collector system and a plate collector system. Complies with filtration requirements as per standard EN 16713-1.

- DN 200 filter lid with quick-locking system for 650 and 800 models and DN 400 bolt down lid for 1000 and 1200 models.
- DN200 lateral manhole with bolt down cover.
- Filter interior left with natural resin finish.
- Methacrylate sight glass as standard. Further sight glasses are available on request.
- Inner pipe and fittings in PVC, PP and ABS.
- Pressure gauge included in filter lid.
- Gaskets in EPDM and all screw fittings in stainless steel.
- Vinylester option. In this case, all laminated layers are manufactured from vinylester resin (and not only the top layer in contact with the water), to a maximum chemical resistance of 0.4 ppm of ozone dissolved and to a maximum water temperature of 40ºC.
- Comes in RAL 5024 blue.

**Maximum pressure: 2.5 kg/cm².** — **Conventional collector arms. Arm slots 0.3 mm**

| Diameter Ø mm | Outlet Ø mm | Flow m³/h 40m³/h/m² | Code | Standard Packaging | Standard Weight Kg | Standard Volume m³ |
|---|---|---|---|---|---|---|
| **650** | 1 1/2" | 13.3 | **36680** | 1 | 100 | 1.50 |
| **800** | 2" | 20.1 | **36681** | 1 | 110 | 1.94 |
| **1000** | 2 1/2" | 31.4 | **36682** | 1 | 120 | 2.31 |
| **1200** | 90 | 45.2 | **36683** | 1 | 160 | 3.54 |

**Maximum pressure: 2.5 kg/cm².** — **Nozzle collector plate. Nozzle slots 0.5 mm**

| Diameter Ø mm | Outlet Ø mm | Flow m³/h 40m³/h/m² | Code | Standard Packaging | Standard Weight Kg | Standard Volume m³ |
|---|---|---|---|---|---|---|
| **650** | 1 1/2" | 13.3 | **36688** | 1 | 114 | 1.50 |
| **800** | 2" | 20.1 | **36689** | 1 | 131 | 1.94 |
| **1000** | 2 1/2" | 31.4 | **36690** | 1 | 150 | 2.31 |
| **1200** | 90 | 45.2 | **36691** | 1 | 200 | 3.54 |

| | Collector arms | | | | Nozzle collector plate | | | |
|---|---|---|---|---|---|---|---|---|
| | **36680** | **36681** | **36682** | **36683** | **36688** | **36689** | **36690** | **36691** |
| **Sand load (kg)** | 451 | 767 | 1325 | 1763 | 451 | 767 | 1325 | 1763 |
| **Gravel load (kg)** | 86 | 156 | 300 | 350 | 46 | 78 | 120 | 175 |
| **Grade 1 glass load (57011) (kg)** | 373 | 641 | 845 | 1100 | 346 | 589 | 756 | 1013 |
| **Grade 2 glass load (57012) (kg)** | - | - | 276 | 359 | - | - | 247 | 331 |
| **Grade 2 glass load (57012) (kg)** | 101 | 173 | 304 | 396 | 93 | 159 | 272 | 364 |

Filtration bed
1 m

# HIGH-PERFORMANCE LAMINATED SAND FILTERS

## Delta 1000 filters



Complies with Standard
**EN 16713-01**

Filter laminated in polyester and fibreglass available in diameters of 650, 800, 1000 and 1200 mm. It has a 1-m filter bed and is available with an arm collector system and a plate collector system. Complies with filtration requirements as per standard EN 16713-1.

- DN 200 filter lid with quick-locking system for 650 and 800 models and DN 400 bolt down lid for 1000 and 1200 models.
- DN200 lateral manhole with bolt down cover.
- Filter interior left with natural resin finish.
- Methacrylate sight glass as standard. Further sight glasses are available on request.
- Inner pipe and fittings in PVC, PP and ABS.
- Pressure gauge included in filter lid.
- Gaskets in EPDM and all screw fittings in stainless steel.
- Vinylester option. In this case, all laminated layers are manufactured from vinylester resin (and not only the top layer in contact with the water), to a maximum chemical resistance of 0.4 ppm of ozone dissolved and to a maximum water temperature of 40ºC.
- Comes in RAL 5024 blue.

**Maximum pressure: 2.5 kg/cm².**

**Conventional collector arms. Arm slots 0.3 mm**

| Diameter Ø mm | Outlet Ø mm | Flow m³/h 40m³/h/m² | Code | Standard Packaging | Standard Weight Kg | Standard Volume m³ |
|---|---|---|---|---|---|---|
| **500** | 1½" | 8 | **58682** | 1 | 80 | 1.34 |
| **650** | 1½" | 13.3 | **36676** | 1 | 80 | 1.34 |
| **800** | 2" | 20.1 | **36677** | 1 | 90 | 1.71 |
| **1000** | 2½" | 31.4 | **36678** | 1 | 125 | 2.16 |
| **1200** | 90 | 45.2 | **36679** | 1 | 150 | 3.29 |

** Maximum flow and filtration velocity recommended

**Maximum pressure: 2.5 kg/cm².**

**Nozzle collector plate. Nozzle slots 0.5 mm**

| Diameter Ø mm | Outlet Ø mm | Flow m³/h 40m³/h/m² | Code | Standard Packaging | Standard Weight Kg | Standard Volume m³ |
|---|---|---|---|---|---|---|
| **650** | 1½" | 13.3 | **36684** | 1 | 94 | 1.34 |
| **800** | 2" | 20.1 | **36685** | 1 | 111 | 1.71 |
| **1000** | 2½" | 31.4 | **36686** | 1 | 155 | 2.16 |
| **1200** | 90 | 45.2 | **36687** | 1 | 190 | 3.29 |

** Maximum flow and filtration velocity recommended

| | Collector arms | | | | | Nozzle collector plate | | | |
|---|---|---|---|---|---|---|---|---|---|
| | 58682 | 36676 | 36677 | 36678 | 36679 | 36684 | 36685 | 36686 | 36687 |
| **Sand load (kg)** | 245 | 400 | 640 | 990 | 1425 | 400 | 640 | 990 | 1425 |
| **Gravel load (kg)** | 60 | 86 | 156 | 300 | 350 | 46 | 78 | 120 | 175 |
| **Grade 1 glass load (57011) (kg)** | 211 | 337 | 552 | 669 | 923 | 311 | 500 | 580 | 836 |
| **Grade 2 glass load (57012) (kg)** | - | - | - | 219 | 301 | - | - | 189 | 273 |
| **Grade 2 glass load (57012) (kg)** | 57 | 91 | 149 | 241 | 332 | 84 | 135 | 208 | 300 |

NB: Coding options according to table on page 488

# HIGH-PERFORMANCE LAMINATED SAND FILTERS

## Delta filters



Fast lid for diameters 500, 650 and 800



Collector arms detail



Lid D.400 for diameters 1000 and 1200



Nozzle plate detail

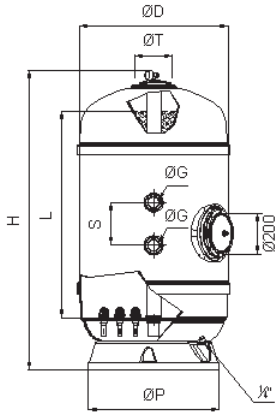


Delta 10 nozzle collector plate

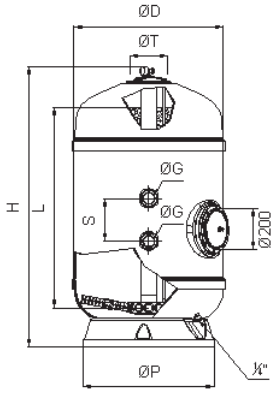


Delta 10 nozzle collector arms

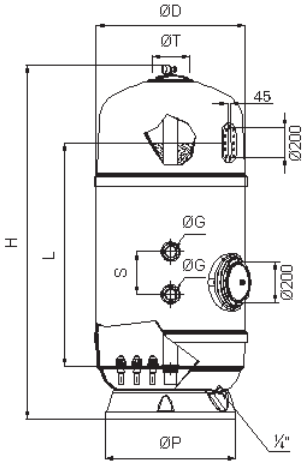


Delta 12 nozzle collector plate

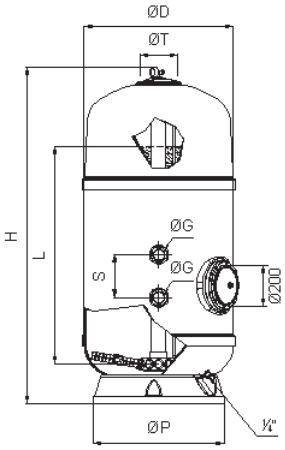


Delta 12 nozzle collector arms

## TECHNICAL FEATURES

| | | DELTA 10 | | | | | | | | | DELTA 12 | | | | | | | |
|---|---|---|---|---|---|---|---|---|---|---|---|---|---|---|---|---|---|---|
| | | Collector arms | | | | | Nozzle collector plate | | | | Collector arms | | | | Nozzle collector plate | | | |
| | | 58682 | 36676 | 36677 | 36678 | 36679 | 36684 | 36685 | 36686 | 36687 | 36680 | 36681 | 36682 | 36683 | 36688 | 36689 | 36690 | 36691 |
| D (mm) | | 535 | 670 | 820 | 1.035 | 1.240 | 650 | 800 | 1.000 | 1.200 | 650 | 800 | 1.000 | 1.200 | 650 | 800 | 1.000 | 1.200 |
| Ø P (mm) | | 400 | 490 | 625 | 890 | 1145 | 490 | 625 | 890 | 1145 | 585 | 700 | 890 | 1145 | 585 | 700 | 890 | 1145 |
| H (mm) | | 1680 | 1702 | 1749 | 1840 | 1915 | 1770 | 1860 | 1870 | 1240 | 1920 | 1995 | 2010 | 2150 | 1920 | 1995 | 2010 | 2150 |
| L (mm) | | - | 1000 | 1000 | 1000 | 1000 | 1000 | 1000 | 1000 | 1000 | 1200 | 1200 | 1200 | 1200 | 1200 | 1200 | 1200 | 1200 |
| S (mm) | | 125 | 125 | 230 | 270 | 300 | 125 | 230 | 270 | 300 | 125 | 230 | 270 | 300 | 125 | 230 | 270 | 300 |
| Ø T | | 200 | 200 | 200 | 400 | 400 | 200 | 200 | 400 | 400 | 200 | 200 | 400 | 400 | 200 | 200 | 400 | 400 |
| Ø G | | 1 1/2" | 1 1/2" | 2" | 2 1/2" | 3" | 1 1/2" | 2" | 2 1/2" | 3" | 1 1/2" | 2" | 2 1/2" | 3" | 1 1/2" | 2" | 2 1/2" | 3" |
| Flow rate m³/h at 30 m³/h/m² | | 5.88 | 9 | 15 | 23 | 34 | 9 | 15 | 23 | 34 | 9 | 15 | 23 | 34 | 9 | 15 | 23 | 34 |
| Flow rate m³/h at 40 m³/h/m² | | 7,84 | 12 | 20 | 30 | 45 | 12 | 20 | 30 | 45 | 12 | 20 | 30 | 45 | 12 | 20 | 30 | 45 |
| MULTILAYER | Anthracite 0.8 – 1.6 mm (l) | - | - | - | - | - | - | - | - | - | 148 | 250 | 387 | 564 | 148 | 250 | 387 | 564 |
| | Sand 0.4 – 0.8 mm (Kg) | - | - | - | - | - | - | - | - | - | 160 | 271 | 419 | 611 | 160 | 271 | 419 | 611 |
| | Gravel 1 – 2 mm (Kg) | - | - | - | - | - | - | - | - | - | 46 | 78 | 120 | 175 | 46 | 78 | 120 | 175 |
| | Gravel 3 – 5 mm (Kg) | - | - | - | - | - | - | - | - | - | 86 | 156 | 300 | 350 | 46 | 78 | 120 | 175 |
| SINGLE LAYER | Sand 0.4 – 0.8 mm (Kg) | 245 | 400 | 640 | 990 | 1425 | 400 | 640 | 990 | 1425 | 451 | 767 | 1325 | 1763 | 451 | 767 | 1325 | 1763 |
| | Gravel 1 – 2 mm (Kg) | 60 | 86 | 156 | 300 | 350 | 46 | 78 | 120 | 175 | 86 | 156 | 300 | 350 | 46 | 78 | 120 | 175 |
| | Grade 1 glass load (57011) (kg) | 211 | 337 | 552 | 669 | 923 | 311 | 500 | 580 | 836 | 373 | 641 | 845 | 1100 | 346 | 589 | 756 | 1013 |
| | Grade 2 glass load (57012) (kg) | - | - | - | 219 | 301 | - | - | 189 | 273 | - | - | 276 | 359 | - | - | 247 | 331 |
| | Grade 2 glass load (57012) (kg) | 57 | 91 | 149 | 241 | 332 | 84 | 135 | 208 | 300 | 101 | 173 | 304 | 396 | 93 | 159 | 272 | 364 |

**Filtration bed 1.2 m**

# HIGH-PERFORMANCE LAMINATED SAND FILTERS

## Artic Plus filter



Range of high-capacity retention filters with optimal backwash performance. Manufactured in polyester with an external gel-coat finish. Body of just two parts; ivory. Maximum working temperature of 50ºC. Internal parts made from PVC plastic. Antivortex. Ø 400 lid to remove sand from bottom part of filter (optional) in Ø 1050 and Ø 1200 versions. Ø 650, 800, 950, 1050 and 1200 filters available with collector arms or nozzle plate. Compatible with sand and glass, among others (see page 147). Complies with filtration requirements as per standard EN 16713-1.

| | Code | Standard Pack | Standard Weight in kg | Standard Volume in $m^3$ |
|---|---|---|---|---|
| **Collector arms system** | | | | |
| Ø 650 mm connection 1½" | **36053-100** | 1 | 80 | 1.45 |
| Ø 800 mm connection 2" | **36054-100** | 1 | 95 | 1.85 |
| Ø 950 mm connection 2½" | **41373** | 1 | 136 | 2.54 |
| Ø 1050 mm connection 3" | **36055** | 1 | 145 | 2.73 |
| Ø 1200 mm connection 4" | **36056** | 1 | 220 | 4.10 |

Complies with Standard **EN 16713-01**



Nozzle plate detail



Collector arms detail

| | 36053 | 36054 | 41373 | 36055 | 36056 |
|---|---|---|---|---|---|
| **Ø D (mm)** | 680 | 825 | 970 | 1090 | 1255 |
| **H (mm)** | 1900 | 1950 | 1960 | 2145 | 2170 |
| **M (mm)** | 125 | 230 | 270 | 270 | 270 |
| **N (mm)** | 730 | 670 | 665 | 665 | 665 |
| **L (mm)** | 1200 | | | | |
| **C (mm)** | 300 | | | | |
| **P (mm)** | 490 | 625 | 705 | 775 | 940 |
| **T (mm)** | 200 | | | 400 | |
| **Connections** | 1½" | 2" | 2½" | 3" | 4" |
| **Flow rate ($m^3/h$)** | 16,5 | 25 | 35 | 43 | 56,5 |
| **Filtration area ($m^2$)** | 0,33 | 0,50 | 0,70 | 0,86 | 1,13 |
| **Sand load (kg)** | 470 | 660 | 1015 | 1240 | 1665 |
| **Gravel load (kg)** | 100 | 165 | 260 | 320 | 410 |
| **Grade 1 glass load (57011) (kg)** | 396 | 572 | 663 | 811 | 1079 |
| **Grade 2 glass load (57012) (kg)** | - | - | 216 | 265 | 352 |
| **Grade 2 glass load (57012) (kg)** | 107 | 154 | 238 | 291 | 388 |
| **Maximum pressure ($kg/cm^2$)** | 2,5 | | | | |
| **Net weight (kg)** | 75 | 90 | 131 | 135 | 210 |
| **Water drain** | 1" | 1" | 1" | 2½" | 2½" |
| **Injection-moulded plastic lid** | Ø200 | Ø200 | Ø200 | Ø400 | Ø400 |



**Filtration bed 1 m**

# HIGH-PERFORMANCE LAMINATED SAND FILTERS

## Artic filter



Range of high-capacity retention filters with optimal backwash performance. Manufactured in polyester with an external gel-coat finish. Body of just two parts; ivory. Maximum working temperature of 50ºC. Internal parts made from PVC plastic. Antivortex. Ø 400 lid to remove sand from bottom part of filter (optional) in Ø 1050 and Ø 1200 versions. Ø 650, 800, 950, 1050 and 1200 filters available with collector arms or nozzle plate. Compatible with sand and glass, among others (see page 147). Complies with filtration requirements as per standard EN 16713-1.

| | Code | Standard Pack | Standard Weight in kg | Standard Volume in $m^3$ |
|---|---|---|---|---|
| **Collector arms system** | | | | |
| Ø 500 mm connection 1½" | **34029-0100** | 1 | 65 | 1.30 |
| Ø 650 mm connection 1½" | **34030-0100** | 1 | 70 | 1.34 |
| Ø 800 mm connection 2" | **34031-0100** | 1 | 75 | 1.67 |
| Ø 950 mm connection 2½" | **41187** | 1 | 119 | 2.30 |
| Ø 1050 mm connection 3" | **41188** | 1 | 145 | 2.42 |
| Ø 1200 mm connection 4" | **41189** | 1 | 165 | 3.65 |

Complies with Standard **EN 16713-01**



Nozzle plate detail



Collector arms detail

| | 34029 | 34030 | 34031 | 41187 | 41188 | 41189 |
|---|---|---|---|---|---|---|
| **Ø D (mm)** | 535 | 680 | 825 | 970 | 1090 | 1255 |
| **H (mm)** | 1650 | 1700 | 1750 | 1760 | 1895 | 1970 |
| **M (mm)** | 125 | 125 | 230 | 270 | 270 | 270 |
| **N (mm)** | 780 | 775 | 685 | 655 | 630 | 665 |
| **L (mm)** | 1000 | | | | | |
| **C (mm)** | 300 | | | | | |
| **P (mm)** | 400 | 490 | 625 | 705 | 775 | 940 |
| **T (mm)** | 200 | | | | 400 | |
| **Connections** | 1½" | 1½" | 2" | 2½" | 3" | 4" |
| **Flow rate ($m^3/h$)** | 9.5 | 16.5 | 25 | 35 | 43 | 56.5 |
| **Filtration area ($m^2$)** | 0.19 | 0.33 | 0.50 | 0.70 | 0.86 | 1.13 |
| **Sand load (kg)** | 225 | 380 | 530 | 830 | 1015 | 1360 |
| **Gravel load (kg)** | 50 | 100 | 165 | 260 | 320 | 410 |
| **Grade 1 glass load (57011) (kg)** | 191 | 332 | 481 | 754 | 923 | 1225 |
| **Grade 2 glass load (57012) (kg)** | 51 | 90 | 130 | 203 | 249 | 330 |
| **Maximum pressure ($kg/cm^2$)** | 2.5 | 2.5 | 2.5 | 2.5 | 2.5 | 2.5 |
| **Net weight (kg)** | 60 | 65 | 70 | 109 | 135 | 155 |
| **Water drain** | 1" | 1" | 1" | 1" | 2½" | 2½" |
| **Injection-moulded plastic lid** | Ø200 | Ø200 | Ø200 | Ø200 | Ø400 | Ø400 |

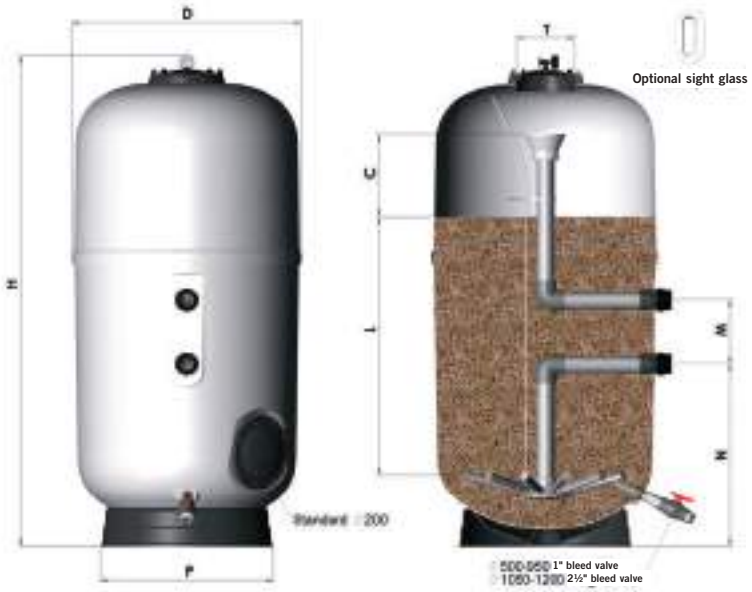

## Filter bed depth 0.8 m

# HIGH-PERFORMANCE LAMINATED SAND FILTERS



Complies with Standard **EN 16713-01**

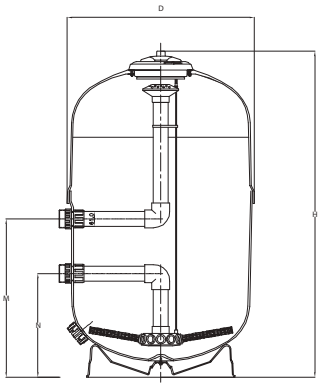

## Aster filter - high quality of filtration

Laminated filter made of fibreglass and polyester. Filter bed 800 mm in depth. Grey in colour, polypropylene base, new boltless lid, water drainage plug, flowmeter and side multiport valve. Maximum pressure of 2.5 kg/cm². Top filtration speed of 50 m³/h/m². The filter can be used with a single layer or a multi-layer combination of gravel with sand, glass or anthracite. Quick-release lid. Has a 2½" sand discharge out let at the bottom of the filter. Optional sand discharge outlet of 200 mm. Optional vinylester interior finish for treatment with ozone. Top working temperature of 40 ºC.

| | Code | Standard Pack | Standard Weight in kg | Standard Volume in m³ |
|---|---|---|---|---|
| Ø 500 mm output 1½" | **24768-0100** | 1 | 30 | 0.44 |
| Ø 600 mm output 1½" | **24769-0100** | 1 | 40 | 0.64 |
| Ø 750 mm output 2" | **24770-0100** | 1 | 60 | 1.0 |
| Ø 900 mm output 2" | **10003-0100** | 1 | 90 | 1.6 |
| Ø 900 output 2½" | **10004** | 1 | 90 | 1.6 |

| | 24768-0100 | 24769-0100 | 24770-0100 | 10003-0100 | 10004 |
|---|---|---|---|---|---|
| **Ø D (mm)** | 500 | 600 | 750 | 900 | |
| **H (mm)** | 1365 | 1370 | 1435 | 1400 | 1435 |
| **M (mm)** | 605 | 605 | 665 | 825 | 865 |
| **N (mm)** | 480 | 480 | 435 | 595 | 595 |
| **Connections** | 1½" | 1½" | 2" | 2" | 2½" |
| **Flow (m³/h) at 50 m³/h/m²** | 9.5 | 16.5 | 21 | 31 | |
| **Pool volume (m³)** | 75 | 120 | 175 | 250 | |
| **Sand load (kg)** | 200 | 300 | 450 | 580 | |
| **Gravel load (kg)** | 16 | 35 | 65 | 135 | |
| **Grade 1 glass load (57011) (kg)** | 151 | 233 | 358 | 496 | |
| **Grade 2 glass load (57012) (kg)** | 41 | 63 | 97 | 134 | |
| **Maximum pressure (kg/cm²)** | 2.5 | | | | |

## Filtration bed 0.6 m



Complies with Standard **EN 16713-01**

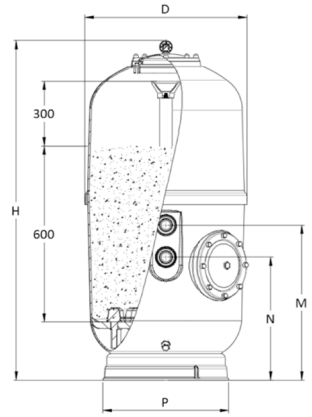


## Aster filter high filtration with nozzle plate

Filter laminated in polyester and fibreglass. Optional Ø 200mm sand discharge at bottom. Black screw-down lid ¼" water drain at bottom. Maximum working pressure of 2.5 kg/cm². Maximum working temperature of 40ºC.

| | Code | Standard Pack | Standard Weight in kg | Standard Volume in m³ |
|---|---|---|---|---|
| Ø 500 mm output 2" | **24768FT01-110 000** | 1 | 30 | 0.46 |
| Ø 600 mm output 2" | **24769FT01-110 000** | 1 | 40 | 0.63 |
| Ø 750 mm output 2" | **24770FT01-110 000** | 1 | 60 | 0.99 |
| Ø 900 mm output 2" | **10003FT01-110 000** | 1 | 90 | 1.29 |
| Ø 900 output 2½" | **10004FT01-110 000** | 1 | 90 | 1.29 |

| | 24768FT01 110 000 | 24769FT01 110 000 | 24770FT01 110 000 | 10003FT01 110 000 | 10004FT01 110 000 |
|---|---|---|---|---|---|
| **Ø D (mm)** | 500 | 600 | 750 | 900 | |
| **H (mm)** | 1365 | 1370 | 1435 | 1400 | 1435 |
| **M (mm)** | 605 | 605 | 665 | 825 | 865 |
| **N (mm)** | 480 | 480 | 435 | 595 | |
| **P (mm)** | 400 | 490 | 625 | 705 | |
| **Connections** | 1½" | 1½" | 2" | 2" | 2½" |
| **Flow (m³/h) at 50 m³/h/m²** | 9.5 | 16.5 | 21 | 31 | |
| **Pool volume (m³)** | 75 | 120 | 175 | 250 | |
| **Sand load (kg)** | 200 | 300 | 450 | 580 | |
| **Gravel load (kg)** | 16 | 35 | 65 | 135 | |
| **Grade 1 glass load (57011) (kg)** | 151 | 233 | 358 | 496 | |
| **Grade 2 glass load (57012) (kg)** | 41 | 63 | 97 | 134 | |
| **Maximum pressure (kg/cm²)** | 2.5 | | | | |

+ info
PDB
Further information on **PRODUCTS**
**www.astralpool.com**

# BOBBIN-WOUND SAND FILTERS

Filters made of fiberglass and polyester resin with Internal components and accessories in high quality engineering plastics. thanks to its double coating, the resulting body is extremely resistant, durable and reliable. Compatible with sand and glass, among others (see page 147). They comply with filtration requirements as per standard EN 16713-1.







UNE-EN 16713-01

Complies with Standard
**EN 16713-01**

## Berlin filter

Ø 230mm screw-down lid, injection-moulded. Fitted with manual air and water bleed valves, a pressure gauge and a side mounted multiport valve. Maximum filtration speed ($m^3/h/m^2$) Complies with filtration requirements as per standard EN 16713-1. Sand and glass compatible (see page 147).

| | Code | Pack. Standard | Weight kg Standard* | Volume in $m^3$ Standard* |
|---|---|---|---|---|
| **With multiport valve:** | | | | |
| 9000 l/h Ø 500 mm outlet 1½" | **00541** | 1 | 17.3 | 0.24 |
| 14000 l/h Ø 600 mm outlet 1½" | **00542** | 1 | 21.8 | 0.37 |
| 21000 l/h Ø 750 mm outlet 2" | **00543** | 1 | 35.1 | 0.65 |
| **Without multiport valve:** | | | | |
| 30000 l/h Ø 900 mm outlet 2½" | **00544** | 1 | 53.4 | 1.01 |
| 30000 l/h Ø 900 mm outlet 2" | **15397** | 1 | 53.4 | 1.01 |
| 30000 l/h Ø 900 mm outlet 2" (4 bar) | **28474** | 1 | 67.0 | 1.01 |
| **Without multiport valve and with Ø 400 mm polyester and FV lid:** | | | | |
| 43000 l/h Ø 1050 mm outlet Ø 75 mm | **00545** | 1 | 110.0 | 1.92 |
| 56000 l/h Ø 1200 mm outlet Ø 90 mm | **00546** | 1 | 140.0 | 2.70 |

* Figures without valve

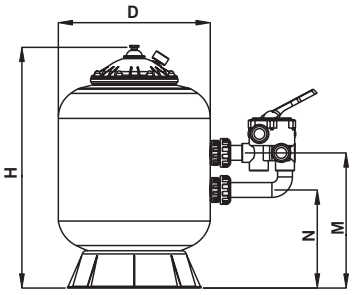


With multiport valve

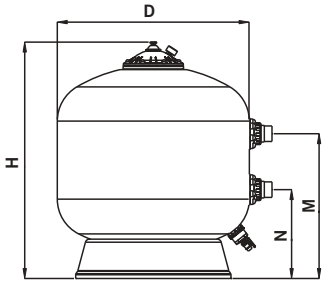


Without multiport valve

| | With multiport valve | | | Without multiport valve | | | | |
|---|---|---|---|---|---|---|---|---|
| | **00541** | **00542** | **00543** | **00544** | **15397** | **28474** | **00545** | **00546** |
| **Ø D (mm)** | 500 | 600 | 750 | 900 | 900 | 900 | 1050 | 1200 |
| **H (mm)** | 805 | 910 | 1050 | 1145 | 1135 | 1135 | 1300 | 1450 |
| **M (mm)** | 450 | 505 | 610 | 685 | 635 | 635 | 810 | 870 |
| **N (mm)** | 325 | 380 | 380 | 415 | 405 | 405 | 500 | 560 |
| **Connections** | 1½" | 1½" | 2" | 2½" | 2" | 2" | *D75 | **D90 |
| **Flow ($m^3/h$) at 50 $m^3/h/m^2$** | 9 | 14 | 21 | 30 | 30 | 30 | 43 | 56 |
| **Pool volume ($m^3$)** | 50-75 | 75-115 | 115-170 | 170-240 | - | - | 240-350 | 350-450 |
| **Sand load (kg)** | 100 | 175 | 300 | 525 | 525 | 525 | 575 | 800 |
| **Gravel load (kg)** | - | - | - | - | - | - | 300 | 300 |
| **Grade 1 glass load (57011) (kg)** | 70 | 123 | 210 | 368 | 368 | 368 | 451 | 570 |
| **Grade 2 glass load (57012) (kg)** | - | - | - | - | - | - | 147 | 186 |
| **Grade 2 glass load (57012) (kg)** | 19 | 33 | 57 | 99 | 99 | 99 | 162 | 205 |
| **Maximum pressure ($kg/cm^2$)** | 2.5 | 2.5 | 2.5 | 2.5 | 2.5 | 4 | 2.5 | 2.5 |
| **Net weight (kg)** | 15.3 | 19.8 | 33.1 | 51.4 | 51.4 | 51.4 | 100 | 130 |
| **Package volume ($m^3$)** | 0.35 | 0.37 | 0.65 | 1.01 | 1.01 | 1.01 | 1.92 | 2.70 |

See our wide range of housing according to your filtration needs

# COMPACTS WITHOUT INTERIOR INSTALLATION



## In-ground compact housings

Stackable to facilitate shipping and storage; streamlined interior to obtain top performance in the smallest possible space. Light cover with reinforced hinges. Prefabricated in polyester and fibreglass with a gelcoat finish. Outside of the cover in green and inside of the housing in ivory.

| | Code | Standard Pack | Standard Weight in kg | Standard Volume in $m^3$ |
|---|---|---|---|---|
| **Supplied with openings for connections:** | | | | |
| For filters Ø 350 mm | **00615 /1** | 1 | 175 | 2.02 |
| For filters Ø 400-450-500-600 mm | **00616 /1** | 1 | 156.5 | 2.54 |
| For filters Ø 650-750-800 mm | **00618** | 1 | 126.0 | 3.87 |



## Semi in-ground compact housings

Prefabricated in polyester and fibreglass. Ivory. Fully opening cover.

| | Code | Standard Pack | Standard Weight in kg | Standard Volume in $m^3$ |
|---|---|---|---|---|
| For filters Ø 450-500-600 mm | **00619/1** | 1 | 80.0 | 2.7 |
| For filters Ø 600-450-650-750 mm | **00620/1** | 1 | 145.0 | 3.2 |

# COMPACTS WITH INTERIOR INSTALLATION



## Ramses in-ground compact housing

Embedded housing comprising an injection-moulded reinforced polymer body and lid. Complete and ready-assembled.
Connections: Ø50 PVC tube All pool types of up to $80m^3$

**Components that include:**

- 1 hp pump.
- Filter (according to model).
- 6-way top valve.
- Interior PVC connections and valves.

| | Code | Standard Pack | Standard Weight in kg | Standard Volume in $m^3$ |
|---|---|---|---|---|
| Ramses with Aster 550 filter | **41910** | 1 | 76 | 1.18 |
| Ramses with Millennium 560 filter | **69829** | 1 | 68 | 1.18 |

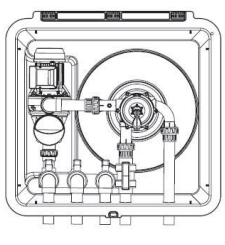

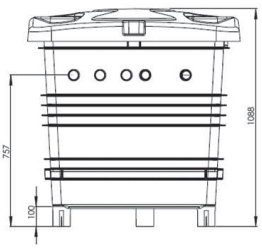


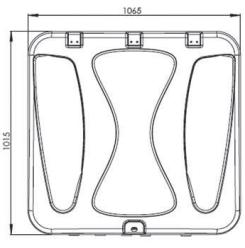

+ info
Further information on **PRODUCTS**
www.astralpool.com

# COMPACTS WITH INTERIOR INSTALLATION





## In-ground compact Keops with salt chlorinator

Embedded housing comprising an injection-moulded reinforced polymer body and lid. Complete and ready-assembled.
Connections: Ø50 PVC tube All pool types of up to 100m³

**Components that include:**

- Advantages of Victoria Plus Silent 1HP
- Filter (according to model).
- 6-way side valve.
- Compact 100 salt chlorinator.
- Interior PVC connections and valves.

| | Code | Standard Pack | Standard Weight in kg | Standard Volume in m³ |
|---|---|---|---|---|
| Keops with salt chlorinator and Cantabric 600 filter | **69832** | 1 | - | - |
| Keops with salt chlorinator and Aster 600 filter | **69831** | 1 | - | - |

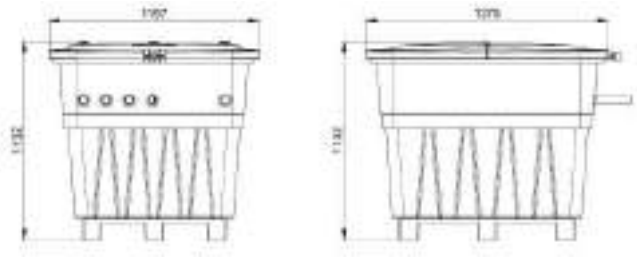







## Above ground compacts - Ramses Up

Designed for outdoor installation. Lid with reinforced edge. Size: 149 x 82 x 120.

| | Code | Standard Pack | Standard Weight in kg | Standard Volume in m³ |
|---|---|---|---|---|
| Without inner assembly | **61423** | 1 | 25 | 0.400 |
| With Aster 550 Sena 1 HP S/A | **61423AS55001** | 1 | - | - |

+ info
Further information on **PRODUCTS**
www.astralpool.com

## SELECTOR VALVES



A wide range of valves which offers the New Generation series, the Classic series and Flat series with 1½" and 2" valve configurations. The Magnum series with 2½", 3" and 4" valves completes the range.

### Six-port multiport valve

A six-port selector valve able to perform several functions in a hydraulic circuit: filtration, flushing, shut-off, backwashing and rinsing of the filter. Its extremely functional design means that it can be fitted up to any installation. All joints will be perfectly sealed and it is easy to operate.

Its minimum friction and resistance, maximum safety and pleasant finish were decisive factors in choosing the materials that best adapted to the needs of all of its components: ABS body, lid and handle, PPO distributor, EPDM gaskets, metal parts in stainless steel.

### Connection options in multiport valve

| Connection options | | Connection | Lower outlets | New Generation | | | Classic | | Flat | Magnum | |
|---|---|---|---|---|---|---|---|---|---|---|---|
| | | | |  |  | |  | |  |  |  |
| | | | | 1 ½" Eco | 1 ½" | 2" | 1 ½" | 2" | 1 ½" | 2 ½" | 3" |
| **Configuration 1**  | "Top" inlet and "Bottom" outlet at the base. Commonly used for filters with a Top output valve. | Without connection | Threaded | | | 28509 | 11542 | 08938 | | | |
| | | | Smooth | | | | 00597 | | | | |
| **Configuration 2**  | "Top" inlet at the base and "Bottom" outlet on one side. | With connection | Threaded | | | | | | | | |
| | | | Smooth | | | | 15385 | 15389 | | | |
| | | Without connection | Threaded | | | 28510 | 11366 | 08939 | | | |
| | | | Smooth | | | | | | | | |
| **Configuration 3**  | Filter inlet "Top" from the MPV side and filter outlet "Bottom" to the MPV base. This configuration can be supplied with pipework and connections for side mounting. | With connection | Threaded | | | | | | | | |
| | | | Smooth | | 20569 | 28512 | 00599 | 07444 | 34543 | 24837 | |
| | | Without connection | Threaded | | 23108 | 28511 | 14909 | 07441 | 34544 | 24838 | |
| | | | Smooth | | 20043 | | 00598 | | 34545 | | |
| **Configuration 4**  | Both the filter inlet "Top" and the filter outlet "Bottom" from and to the MPV sides. | Without connection | Threaded | | | 28513 | 11368 | 08940 | | | |
| | | | Smooth | | | | | | | | |
| **Configuration 5**  | All inlets and outlets open. | Without connection | Threaded | | | 28514 | | | | | 28515 |
| | | | Smooth | | | | | | | | |
| | Top | Without connection | Threaded | | | | | | | | |
| | | | Smooth | 32583 | 20565 | 33968 | | 22490 | 34546 | | |

# SELECTOR VALVES

**New Generation**
Manual multiport valves which incorporate a bayonet closing system (replacing bolts). This eases dismantling for maintenance and prevents rust.
The range includes the 1½" and 2" versions, including a "Top Eco" version available in 1½".



## Selector valve with coupling to filter - New generation

| | Code | Standard Pack | Standard Weight in kg | Standard Volume in m³ |
|---|---|---|---|---|
| Configuration 3 - 1 ½" | **20569** | 6 | 14.0 | 0.079 |
| Configuration 3 - 2" | **28512** | 6 | 26.4 | 0.165 |
| Configuration 3 - 1 ½" NPT | **22355** | 6 | 14.0 | 0.079 |
| Configuration 3 - 2" NPT | **30788** | 6 | 26.4 | 0.165 |



## 1½" and 2" multiport valve - New Generation

| | Code | Standard Pack | Standard Weight in kg | Standard Volume in m³ |
|---|---|---|---|---|
| **Multiport valve 1½" - Configuration 3** | **20043** | 6 | 11.5 | 0.079 |
| **Multiport valve 2":** | | | | |
| Configuration 1 | **28509** | 6 | 22.3 | 0.165 |
| Configuration 2 | **28510** | 6 | 22.3 | 0.165 |
| Configuration 3 | **28511** | 6 | 22.3 | 0.165 |
| Configuration 4 | **28513** | 6 | 22.3 | 0.165 |
| Configuration 5 | **28514** | 6 | 22.3 | 0.165 |
| Multiport valve 1½" NPT - Configuration 3 | **22356** | 6 | 11.5 | 0.079 |
| Multiport valve 2" NPT - Configuration 3 | **30795** | 6 | 22.3 | 0.165 |



## 1½" and 2" multiport valve. Top Config. - New Generation

| | Code | Standard Pack | Standard Weight in kg | Standard Volume in m³ |
|---|---|---|---|---|
| Top 1½" Multiport valve | **20565** | 6 | 12.10 | 0.079 |
| Top 2" Multiport valve | **33968** | 1 | 3.95 | 0.028 |
| Top 1½" NPT Multiport valve | **22358** | 6 | 12.10 | 0.079 |



## 1½" multiport valve. Top ECO version - New Generation

6-way multiport valve for above ground pool filters where the pressure does not exceed 1.5 bar, of maximum diameter 380 mm. Bayonet closing system.

| Code | Standard Pack | Standard Weight in kg | Standard Volume in m³ |
|---|---|---|---|
| **32583** | 6 | 8.83 | 0.082 |

+ info
Further information on **PRODUCTS**
www.astralpool.com

## SELECTOR VALVES

**Classic**
Manual multiport valves with six channels to carry out different functions in an hydraulic circuit.
Its design, basically functional, offers a wide range of possibilities of connection to any installation, assuring perfect water-tightness and comfortable handling.



### 1½" and 2" multiport valve with filter connections - Classic

| | Code | Standard Pack | Standard Weight in kg | Standard Volume in m³ |
|---|---|---|---|---|
| **1½" multiport valve** - Configuration 3 | **00599** | 6 | 15.5 | 0.079 |
| **2" multiport valve** - Configuration 3 | **07444** | 6 | 22.7 | 0.150 |
| **1½" NPT multiport valve** - Configuration 3 | **06673-0700** | 6 | 15.5 | 0.079 |
| **2" NPT multiport valve**- Configuration 3 | **09848** | 6 | 22.7 | 0.150 |



### 1½" and 2" multiport valve - Classic

| | Code | Standard Pack | Standard Weight in kg | Standard Volume in m³ |
|---|---|---|---|---|
| **1½" multiport valve** - Configuration 1 | **00597** | 6 | 12.2 | 0.079 |
| **1½" multiport valve** - Configuration 3 | **00598** | 6 | 12.1 | 0.079 |
| **2" multiport valve** - Configuration 3 | **07441** | 6 | 19.9 | 0.150 |
| **1½" NPT multiport valve** - Configuration 3 | **06595** | 6 | 12.1 | 0.079 |
| **2" NPT multiport valve** - Configuration 3 | **07440** | 6 | 19.9 | 0.150 |



**65216** **22490**

### 2" TOP multiport valve- Classic

6-way TOP multiport valve for residential pools. Body, cover and handle injected in ABS. 2" thread.

| | Code | Standard Pack | Standard Weight in kg | Standard Volume in m³ |
|---|---|---|---|---|
| Top 1½" Multiport valve | **65216** | 6 | 14.6 | 0.123 |
| Top 2" Multiport valve | **22490** | 1 | 3.45 | 0.028 |
| 2" TOP multiport valve | **22492** | 1 | 3.45 | 0.028 |

**Flat**
Introducing a new multiport valve which for the first time features a special compact look thanks to its single-level design (compared to the normal twin-level set-up in other multiport valves). This reduced size makes the equipment especially suitable in installations where space is at a premium, such as in filter housing or monoblocks.



### 1½" lateral multiport valve with filter connections - Flat

| | Code | Standard Pack | Standard Weight in kg | Standard Volume in m³ |
|---|---|---|---|---|
| Configuration 3 | **34543** | 1 | - | - |



### 1½" lateral multiport valve - Flat

| | Code | Standard Pack | Standard Weight in kg | Standard Volume in m³ |
|---|---|---|---|---|
| Configuration 3 (bottom port threaded) | **34544** | 1 | - | - |
| Configuration 3 (bottom port solve weld) | **34545** | 1 | - | - |



### 1½" TOP multiport valve - Flat

| | Code | Standard Pack | Standard Weight in kg | Standard Volume in m³ |
|---|---|---|---|---|
| | **34546** | 1 | - | - |

## SELECTOR VALVES

**Magnum**
Specially designed to support high working pressures and connection to large filters which require special connections. Choose from the models offered: 2 ½", 3" and 4" multiport valves.



### 2½" multiport valve with filter connections - Magnum

Multiport valve with connections to pool pipes.

| | Code | Standard Pack | Standard Weight in kg | Standard Volume in $m^3$ |
|---|---|---|---|---|
| **2½" multiport valve** - Configuration 3 | **24837** | 1 | 9.5 | 0.060 |
| **2½" NPT multiport valve** - Configuration 3 | **24840** | 1 | 9.5 | 0.060 |



### 2½" multiport valve - Magnum

Filter inlet from the side and outlet from the bottom. With connections to pool pipes.

| | Code | Standard Pack | Standard Weight in kg | Standard Volume in $m^3$ |
|---|---|---|---|---|
| **2½" multiport valve** - Configuration 3 | **24838** | 1 | 8.2 | 0.061 |
| **2½" NPT multiport valve** - Configuration 3 | **24839** | 1 | 8.2 | 0.061 |



### 3" multiport valve - Magnum

Side mounted 6-way multiport valve for connecting to filters. Body and cover injected in ABS and fibreglass. Handle injected in ABS. Sealing system by stainless steel screws. Supplied with two plugs so that the customer can adapt the valve to the most suitable configuration.

| | Code | Standard Pack | Standard Weight in kg | Standard Volume in $m^3$ |
|---|---|---|---|---|
| **3" multiport valve** | **28515** | 1 | 9.8 | 0.064 |
| **3" NPT multiport valve** | **30798** | 1 | 9.8 | 0.064 |

+ info
Further information on **PRODUCTS**
**www.astralpool.com**

# SELECTOR VALVES



## Flat 1½" automatic multiport VRAC system valve

Low-priced automatic multiport valve model that stands out for its easy operation.
Voltage 230/115 volts. Controls filtration, backwashing, rinsing and emptying.

| | Code | Standard Pack | Standard Weight in kg | Standard Volume in $m^3$ |
|---|---|---|---|---|
| Top | **43512** | 1 | - | - |
| Side | **43513** | 1 | - | - |



## VRAC III automatic multiport valve

New, improved automatic multiport valve operated via button keypad. It makes possible to control filtration, backwashing, rinsing, emptying, recirculation and closed positions.

- **Adaptable:** For using in all devices with a media filter, and it is quick and easy to install.
- **Comfort:** With a simple programming using the keypad, you will receive a fully automated filtration for your pool.
- **Hygiene:** You will obtain an optimal water quality for swimming, optimizing the wash cycles (daily, weekly or by pressure monitoring).
- **Safety:** The automatic valve continuously monitors the filtration system and the valve, thus preventing potential breakdowns. New power surge protection. Spring coated to prevent rusting.

  LED lights for quick look of basic information.

| | Code | Standard Pack | Standard Weight in kg | Standard Volume in $m^3$ |
|---|---|---|---|---|
| Basic $1^1/_2$" side mounted, Config. 3 | **70768** | 1 | 4.27 | 0.023 |
| Basic 2" side mounted, Config. 3 | **70769** | 1 | 5.75 | 0.033 |

COMPATIBLE NN thing
*Fluidra Connect compatible*

**A multiport safety valve (code 41898 or 41899) is recommended.**

| Substituted codes |
|---|
| 70768 in substitution of 57186 |
| 70769 in substitution of 57187 |



## Hydraulic safety valve

The 1 ½" hydraulic safety valve in the drain is specially designed for installation in the drain outlet of an automatic selector valve on a pool sand filter.

Using it prevents water loss when the valve changes its working position or when the electricity flow fails and the valve remains in a position in which it could empty the pool.

It is recommended in installations with SYSTEM VRAC multiport valves.

| | Code | Standard Pack | Standard Weight in kg | Standard Volume in $m^3$ |
|---|---|---|---|---|
| With 50 mm straight double connection | **41898** | 1 | - | - |
| With 1 ½" BSP double hose connection | **41899** | 1 | - | - |

# GAUGE PANEL UNIT



## Gauge panel unit

Including air vents.

| | Code | Standard Pack | Standard Weight in kg | Standard Volume in $m^3$ |
|---|---|---|---|---|
| With pressure gauges 3 $kg/cm^2$ | **00729** | 1 | 1 | 0.007 |
| With pressure gauges 6 $kg/cm^2$ | **00730** | 1 | 1 | 0.007 |

# FILTRATION MEDIA AND ACCESSORIES



## OC-1 filtration media

**OC-1 filtration load: The future of pool filtration**

OC refers to Open Cell and OC-1 is a mechanical filter that uses open-cell filtration technology to filter water with a high quality, increasing the water saving and energy potential. The filtration media is an extruded plastic compound comprising a base of High Density Polyethylene with Calcium Carbonate.

- Saves water: exclusive filtration method that reduces water consumption by more than 40%.
- Saves power: lets you use a smaller pump or lower the power to get the same flow you would with traditional filtration media.
- Saves time: OC-1 reduces backwash frequency to less than a third of traditional methods, meaning more leisure time for you.
- The OC-1 media has been tested in accordance with current European standard EN16713-1.

| | Code | Standard Pack | Standard Weight in kg | Standard Volume in $m^3$ |
|---|---|---|---|---|
| OC-1 50L filtration media bag | **69752** | 1 | 9.0 | 0.05 |
| OC-1 20L filtration media bag | **69753** | 1 | 3.6 | 0.02 |



## Active Clear Glass

AstralPool sells Active Clear Glass filtration material.

Active Clear Glass has the following benefits:

- More efficient and ecological filtration with water and energy savings.
- Higher filtration capacity with a cleaner bed that traps bacteria.

| **Granulomety** | Code | Standard Pack | Standard Weight in kg | Standard Volume in $m^3$ |
|---|---|---|---|---|
| 0.5 mm - 1.0 mm | **57011** | 1 | 25.0 | 0.667 |
| 1.0 mm - 3.0 mm | **57012** | 1 | 25.0 | 0.667 |
| 3.0 mm - 7.0 mm | **57013** | 1 | 25.0 | 0.667 |

| | | | % Volume of the filter bed | |
|---|---|---|---|---|
| | **Code** | **Range** | **Filters D < 900 mm** | **Filters D > 900 mm** |
| **Range 1** | **57011** | 0.5 - 1.0 mm | 0.8 | 0.6 |
| **Range 2** | **57012** | 1.0 - 3.0 mm | 0 | 0.2 |
| **Range 3** | **57013** | 3,0 - 7,0 mm | 0.2 | 0.2 |



## Silex

Other silex grades available to order.
25 Kg bag.

| | Code | Standard Pack | Standard Weight in kg | Standard Volume in $m^3$ |
|---|---|---|---|---|
| Granulometry 0.4 - 0.8 mm | **00596** | 1 | 25 | 0.667 |

## Gravel

Please ask for a quotation for other grades.
25 Kg bag.

| | Code | Standard Pack | Standard Weight in kg | Standard Volume in $m^3$ |
|---|---|---|---|---|
| Granulometry 1 - 2 mm | **10697** | 1 | 25 | 0.667 |
| Granulometry 3 - 5 mm | **11346** | 1 | 25 | 0.667 |

+ info
Further information on **PRODUCTS**
**www.astralpool.com**

# FILTRATION MEDIA & ACCESSORIES

## Anthracite

Please ask for a quotation for other grades.
25 Kg bag.

| | Code | Standard Pack | Standard Weight in kg | Standard Volume in $m^3$ |
|---|---|---|---|---|
| Granulometry 0.8 - 1.6 mm | **03696** | 1 | 25 | 0.8 |



## Zeolite

Natural porous material that has higher filtration qualities than the normal substrate. It can be compared to to that of diatoms, at a much more competitive price and longer duration.

| | Code | Standard Pack | Standard Weight in kg | Standard Volume in $m^3$ |
|---|---|---|---|---|
| Zeolite standard 0.5 - 1 mm | **25845** | 1 | 25 | - |
| Zeolite standard 1-2 mm | **25846** | 1 | 30 | 0.023 |
| Zeolite standard 2-5 mm | **25847** | 1 | 30 | 0.023 |



# PUMPS


151 • Variable speed pumps
152 • Self-priming pumps
155 • Control boxes
158 • Countercurrent swimming equipment – Selection guide
159 • Countercurrent swimming equipment
165 • Blower pumps

# VICTORIA PLUS SILENT VS

## Shhhhh... Relax and enjoy the silence of your pool

**A NEW GENERATION OF FILTRATION PUMPS**



**Silent**
At just 45 dB, it is amongst the most silent pumps in the market

**Savings**
A variable speed pump that could see you save as 900€ in power consumption

**Fluidra Connect connectivity**
Download the app and program it from your mobile phone or tablet

**User-friendly display**
Easy to use and program with the added bonus that it can be installed on a wall

**Easy to replace**
Compatible with all earlier Victoria models by AstralPool

**Reliability**
Cutting-edge engineering tested for a long, problem-free service life



FLUIDRA

www.astralpool.com

+ info
Further information on **PRODUCTS**
www.astralpool.com

# VARIABLE SPEED PUMPS

VICTORIA**PLUS**
SILENT VS







COMPATIBLE NN thing

*Fluidra Connect compatible*

## Victoria Plus Silent VS pump

New

The Victoria Plus Silent pump for residential pools comes with a 1 hp or 2 hp motor, has variable speeds and can be automatically controlled.
This pump has been designed for both new-build pools and as a replacement for pumps already fitted.
Significant power savings can be made thanks to the use of variable speeds and the timer.
The pump is compatible with the Fluidra Connect platform.
It has a built-in HIM controller with the possibility of mounting it on a wall for better usability.
Bathers experience a greater feeling of well-being due to the reduced noise level.
There are digital inputs and outputs for the smooth running of all pool units, such as the salt chlorinator and heat pump. It includes a power factor correction function for reducing current flow. It does not require an external power pack for Fluidra Connect..

| | Code | Standard Pack | Standard Weight in kg | Standard Volume in $m^3$ |
|---|---|---|---|---|
| Victoria Plus Silent VS pump - 1 hp | **67547** | 1 | 19 | 0.087 |
| Victoria Plus Silent VS pump - 2 hp | **67548** | 1 | 22 | 0.087 |

**67547**

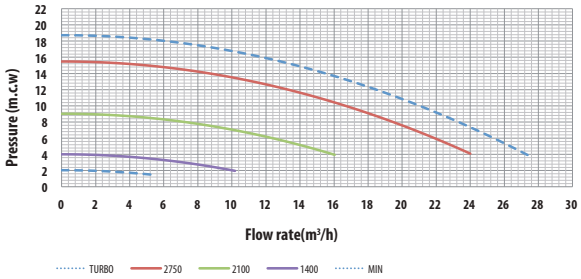


**67548**

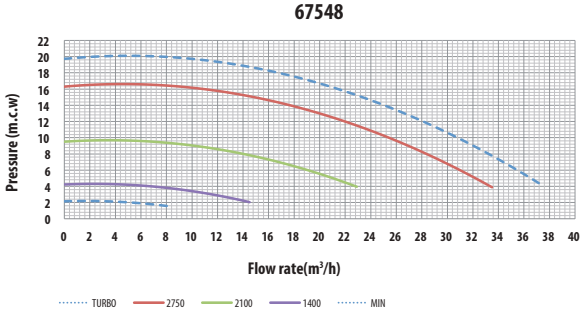




**Menu-driven adjustments and settings**



**Intuitive weekly timer settings**



**Pre-set and adjustable speeds**



**Power consumption and savings display**

**Technical features:**

| | 67547 | | | 67548 | | |
|---|---|---|---|---|---|---|
| | LOW | MEDIUM | HIGH | LOW | MEDIUM | HIGH |
| **Speed (rpm)** | 1400 | 2100 | 2750 | 1400 | 2100 | 2750 |
| **Voltage (V)** | 220-240 | 220-240 | 220-240 | 220-240 | 220-240 | 220-240 |
| **Frequency (Hz)** | 50/60 | 50/60 | 50/60 | 50/60 | 50/60 | 50/60 |
| **Power (W)** | 170 | 470 | 1030 | 258 | 750 | 1560 |
| **Current (A)** | 1 | 2.2 | 4.5 | 1.4 | 3.4 | 7.1 |
| **Flow rate ($m^3$/h)** | 8.2 | 12.4 | 16.7 | 11.1 | 18.8 | 25.5 |
| **Pressure (m)** | 2.7 | 6.1 | 10 | 3.2 | 6.2 | 10 |
| **Efficiency (I/Wh)** | 48.3 | 26.4 | 16.2 | 43 | 25 | 16.3 |
| **Max. working pressure (m)** | 4 | 9 | 15.5 | 4 | 9.4 | 16.3 |
| **Noise (dB)** | 45 | 53 | 61 | 51 | 58 | 66 |

**Installation and control:**



HMI control system on pump



HMI control system on wall

ASTRALPOOL

# VICTORIA PLUS SILENT



The new generation of filtration pumps

## SELF-PRIMING PUMPS

VICTORIAPLUS SILENT



### Victoria Plus Silent pump

A self-priming pump with single-phase and three-phase motors of 1/2 to 3 hp. A prefilter is mounted on the body of the pump to prevent foreign bodies from entering it that may damage its hydraulic parts. The motors supplied come with an IP-55 protection rating and have been prepared to withstand hot environments and high levels of humidity. The main characteristics of Victoria Plus Silent are:

- Low noise level: between 61 dB and 70 dB.
- Easy to use: Prefilter cap with 2 levers included (no spanner needed).
- Compatibility: Fully compatible in pools fitted with a Victoria Plus pump.

Larger front bearing for improved axial thrust.

PVC accessories assembly included in pump.

See performance curves on page 154

| | Code | Standard Pack | Standard Weight in kg | Standard Volume in $m^3$ |
|---|---|---|---|---|
| 10,000 l/h 0.43 kW (½ HP) 230 V II | **65557** | 1 | 12 | 0.07 |
| 10,000 l/h 0.43 kW (½ HP) 230/400 V III | **65558** | 1 | 12 | 0.07 |
| 11,000 l/h 0.61 kW (¾ HP) 230 V II | **65560** | 1 | 13 | 0.07 |
| 11,000 l/h 0.60 kW (¾ HP) 230/400 V III | **65561** | 1 | 13 | 0.07 |
| 16,000 l/h 0.78 kW (1 HP) 230 V II | **65562** | 1 | 14 | 0.07 |
| 16,000 l/h 0.76 kW (1 HP) 230/400 V III | **65563** | 1 | 14 | 0.07 |
| 21,500 l/h 1.10 kW (1.5 HP) 230 V II | **65564** | 1 | 14 | 0.07 |
| 21,500 l/h 1.10 kW (1.5 HP) 230/400 V III | **65565** | 1 | 14 | 0.07 |
| 26,000 l/h 1.46 kW (2 HP) 230 V II | **65566** | 1 | 17 | 0.07 |
| 26,000 l/h 1.46 kW (2 HP) 230/400 V III | **65567** | 1 | 17 | 0.07 |
| 34,000 l/h 2.20 kW (3 HP) 230 V II | **65569** | 1 | 18 | 0.07 |
| 34,000 l/h 2.20 kW (3 HP) 230/400 V III | **65570** | 1 | 18 | 0.07 |

See performance curves on next page.

# SELF-PRIMING PUMPS



## Sena pump

New generation of pumps. Single-phase motors from 1/3 hp up to 1.25 hp in and three-phase motors from ¾ hp to 1.25 hp. GS marking. IP-55 protection rating, Class F insulation and AISI-316 stainless steel for all components in direct contact with water. Glue-in pipe connection sleeve 50 mm in diameter.

Flow rates in l/h at 6 mwc for 0.33 hp, 8 mwc for 2 hp and 10 mwc for rest of range. 3,000 rpm.

| | Code | Standard Pack | Standard Weight in kg | Standard Volume in $m^3$ |
|---|---|---|---|---|
| 7,000 l/h, 1/3 HP, 230 V II | **25461** | 1 | 10.20 | 0.055 |
| 8,500 l/h, ½ HP, 230 V II | **25462** | 1 | 10.20 | 0.055 |
| 9,000 l/h, ¾ HP, 230 V II | **25463** | 1 | 11.65 | 0.055 |
| 9,000 l/h, ¾ HP, 230/400 V III | **25464** | 1 | 11.40 | 0.055 |
| 11,800 l/h, 1 HP, 230 V II | **25465** | 1 | 12.75 | 0.055 |
| 11,800 l/h, 1 HP, 230/400 V III | **25466** | 1 | 13.00 | 0.055 |
| 14,000 l/h, 1.25 HP, 230 V II | **25467** | 1 | 13.75 | 0.055 |
| 14,000 l/h, 1.25 HP, 230/400 V III | **25468** | 1 | 13.55 | 0.055 |



## Colusa pump

The Colusa pump delivers highly efficient hydraulic performance. It has been designed to be silent, long-lasting and reliable.

The pumps are self-priming from ½ hp to 3 hp and are supplied with 3,000 rpm single-phase and three-phase motors. Silent, the new hydraulic design has an extremely low noise level. A prefilter is mounted on the body of the pump to prevent foreign bodies from entering it that may damage its hydraulic parts. This prefilter has a wing nut and a transparent cover that makes maintenance work easier.

Flow rates in l/h at 8 mwc for 1/ 2 hp, 10 mwc for 1 and 1.5 hp, 12 mwc for 2 hp and 14 mwc for 3 hp.

| | Code | Standard Pack | Standard Weight in kg | Standard Volume in $m^3$ |
|---|---|---|---|---|
| 10,000 l/h 0.4 kW (½ HP) 230 V II | **70574** | 1 | 13.6 | 0.079 |
| 13,000 l/h 0.5 kW (¾ HP) 230 V II | **70575** | 1 | 14.3 | 0.079 |
| 16,000 l/h 0.7 kW (1 HP) 230 V II | **70576** | 1 | 15.3 | 0.079 |
| 16,000 l/h 0.7 kW (1 HP) 230/400 V III | **70577** | 1 | 14.3 | 0.079 |
| 21,000 l/h 1.1 kW (1.5 HP) 230 V II | **70578** | 1 | 18.8 | 0.079 |
| 21,000 l/h 1.1 kW (1.5 HP) 230/400 V III | **70579** | 1 | 18.1 | 0.079 |
| 23,000 l/h 1.5 kW (2 HP) 230 V II | **70580** | 1 | 19.6 | 0.079 |
| 23,000 l/h 1.5 kW (2 HP) 230/400 V III | **70581** | 1 | 19.8 | 0.079 |
| 27,000 l/h 2.2 kW (3 HP) 230 V II | **70582** | 1 | 23.8 | 0.079 |
| 27,000 l/h 2.2 kW (3 HP) 230/400 V III | **70583** | 1 | 21.3 | 0.079 |



## Boise pump

The Boise pump is designed to work under a vast range of conditions. Whatever the pool type, it always delivers the required flow rate and pressure.

The Boise pump is built for ease of handling. It has a see-through lid for easy inspection and a large strainer to extend time between cleanings.

The motor materials are rustproof; the motor shaft is made from stainless steel and the sealed bearings never need lubrication. The thermoplastic housing withstands extreme heat and corrosion.

Flow rates in l/h at 6 mwc for 0.33 HP, 8 mwc for 0.5 HP, 10mwc for 0.75 HP and 12 mwc for rest of range.

| | Code | Standard Pack | Standard Weight in kg | Standard Volume in $m^3$ |
|---|---|---|---|---|
| 8,500 l/h 0.23 kW (1/3 HP) 230 V II | **71671** | 1 | 8.8 | 0.039 |
| 10,500 l/h 0.38 kW (½ HP) 230 V II | **71672** | 1 | 9.0 | 0.039 |
| 10,300 l/h 0.52 kW (¾ HP) 230 V II | **71673** | 1 | 9.5 | 0.039 |
| 10,500 l/h 0.71 kW (1 HP) 230 V II | **71674** | 1 | 10.8 | 0.039 |
| 13,900 l/h 0.82 kW (1,25 HP) 230 V II | **71675** | 1 | 11.8 | 0.039 |

Other options available such as 230 HP and 60 Hz motors and Thai/Australian/British connections

## SELF-PRIMING PUMPS

### Self-priming pump performance curves

**Victoria Plus Silent pump**



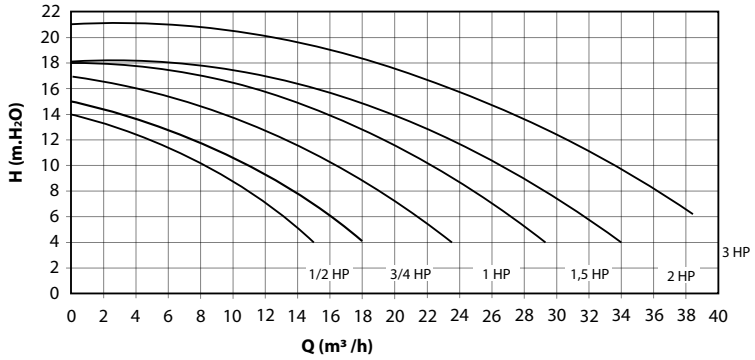


**Sena pump**



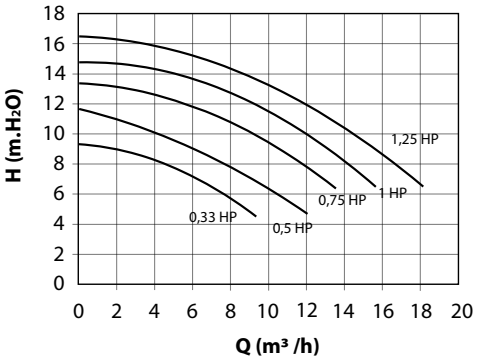


**Colusa pump**



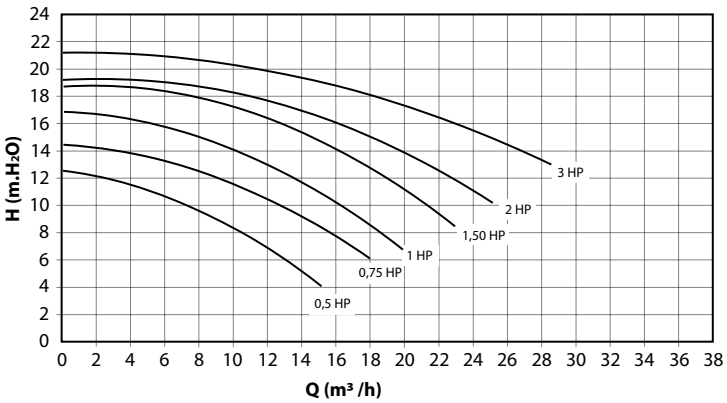


**Boise pump**



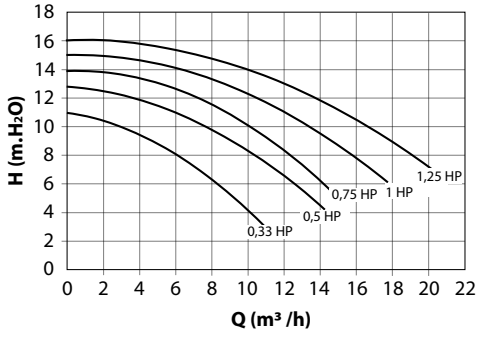

+ info
Further information on **PRODUCTS**
www.astralpool.com

# CONTROL BOXES



## Control boxes

IP-65 protection. Glass panel with lock and key. All units are compatible with:
- 220/240V 1-phase (P+N+T) 50Hz/60Hz
- 380/415V 3-phase (3P+N+T) 50Hz/60Hz
- 220/230V 3-phase (3P+T) 50Hz/60Hz

24h programming clock with hourly programming. Connection for remote control of pump (on/off,...) and for auxiliary equipment (cold detector, level control...).

All products supplied with:
- Electrical diagram
- Connection diagram
- Instructions for installation
- CE conformity certificate
- Stuffing box at every cable entrance
- Screws and plugs (4) for fixing to wall

The control box model should be selected according to the nominal voltage of the pump:

| Type | Intensity range | Power Range 1-phase 230V | Power Range 3-phases 400V | Power Range 3-phases 230V |
|---|---|---|---|---|
| A | 1.6A - 2.5A | 1/4 HP | ¾ HP - 1 HP | ½ HP |
| B | 2.5A - 4A | ½ HP | 1.5 HP - 2 HP | ¾ HP - 1 HP |
| C | 4A - 6.3A | ¾ HP - 1 HP | 3 HP* | 1.5 HP |
| D | 6A - 10A | 1.5 HP | 4 HP** | 2 HP - 3 HP |

* Also 3.5 hp 400V 3~ in plastic (code 08003)
** Also 4.5 and 5.5 hp 400 V 3~ in plastic (codes 08004, 08005)



## Control box for pump overload protection

Thermal overload protection ( 1.6 to 10A), contactor, 24 hr programming clock, modular switch with 3 positions, Auto / 0 / Manual.

| | Code | Standard Pack | Standard Weight in kg | Standard Volume in $m^3$ |
|---|---|---|---|---|
| Type A | **25717** | 1 | 1.5 | - |
| Type B | **25718** | 1 | 1.5 | - |
| Type C | **25719** | 1 | 1.5 | - |
| Type D | **25720** | 1 | 1.5 | - |



## Control box for pump overload protection and underwater light

Thermal overload protection ( 1.6 to 10A), contactor, 24 hr programming clock, modular switch with 3 positions: Auto / 0 / Manual.

| | Code | Standard Pack | Standard Weight in kg | Standard Volume in $m^3$ |
|---|---|---|---|---|
| Type A | **25721** | 1 | 1.6 | - |
| Type B | **25722** | 1 | 1.6 | - |
| Type C | **25723** | 1 | 1.6 | - |
| Type D | **25724** | 1 | 1.6 | - |

+ info
PDB
Further information on **PRODUCTS**
www.astralpool.com

# CONTROL BOXES



## Control box for pumps overload protection and underwater light with differential protection

Thermal overload protection ( 1.6 to 10A), contactor, 24 hr programming clock.
Three positions: Auto/0/manual. Protected 230 V 10 A output and controlled for underwater projectors. Single-phase.

| | Code | Standard Pack | Standard Weight in kg | Standard Volume in $m^3$ |
|---|---|---|---|---|
| Type A | **25725** | 1 | 1.9 | - |
| Type B | **25726** | 1 | 1.9 | - |
| Type C | **25727** | 1 | 1.9 | - |
| Type D | **25728** | 1 | 1.9 | - |



## Control box for pump overload protection and underwater light with differential protection

Thermal overload protection ( 1.6 to 10A), contactor, 24 hr programming clock.
Three positions: Auto/0/manual. Protected 230 V 10 A output and controlled for lights. Three phases. Three-phase.

| | Code | Standard Pack | Standard Weight in kg | Standard Volume in $m^3$ |
|---|---|---|---|---|
| Type A | **25729** | 1 | 1.9 | - |
| Type B | **25730** | 1 | 1.9 | - |
| Type C | **25731** | 1 | 1.9 | - |
| Type D | **25732** | 1 | 1.9 | - |



## Control box for pump overload protection and 1 underwater light

Control box for pump overload protection and 1 underwater light.
Thermal overload protection ( 1.6 to 10A), contactor, 24 hr programming clock.
Three positions: Auto/0/manual. 12 V 315. Protected output for 1 underwater light.

| | Code | Standard Pack | Standard Weight in kg | Standard Volume in $m^3$ |
|---|---|---|---|---|
| Type A | **69916** | 1 | 6 | - |
| Type B | **69917** | 1 | 6 | - |
| Type C | **69918** | 1 | 6 | - |
| Type D | **69919** | 1 | 6 | - |



## Control box for pump overload protection and 2 underwater lights

Thermal overload protection ( 1.6 to 10A), contactor, 24 hr programming clock.
Three positions: Auto/0/manual. 12 V 630. Protected output for 2 underwater lights.

| | Code | Standard Pack | Standard Weight in kg | Standard Volume in $m^3$ |
|---|---|---|---|---|
| Type A | **69920** | 1 | 8 | - |
| Type B | **69921** | 1 | 8 | - |
| Type C | **69922** | 1 | 8 | - |
| Type D | **69923** | 1 | 8 | - |

# CONTROL BOXES



## Control box with overload protection for 2 pumps and control for 1 underwater light

Circuit breaker protection (2 pumps of 1.6 at 10 A), contactor and 24 h timer. Three positions: Auto/0/manual. Protected 230 V 10 A output for lights. Protected 12 V 315 VA output for 1 underwater light.

| | Code | Standard Pack | Standard Weight in kg | Standard Volume in $m^3$ |
|---|---|---|---|---|
| Type C + Type D | **70429** | 1 | 7.5 | - |
| Type D + Type D | **70422** | 1 | 7.5 | - |



## Control box with protection for 2 pumps and control for 2 underwater lights

Thermal overload protection (1srt pump: 4 poles, 10 A max. / 2nd pump: 2 poles, 10 A max.), contactor, 24 hr. programming clock, modular switch "Auto / 0 / Manual". Transformer 230/12 V -600VA for 2 underwater light of 300W.

| | Code | Standard Pack | Standard Weight in kg | Standard Volume in $m^3$ |
|---|---|---|---|---|
| Type C + Type D | **70423** | 1 | 9.5 | - |
| Type D + Type D | **70424** | 1 | 9.5 | - |



## Control box with protection for 1 pump and control for 3 underwater lights

Thermal overload protection ( 4 poles, 10 A max.), contactor, 24 hr. programming clock, modular switch "Auto / 0 / Manual". Transformer 230/12 V -600VA + 300VA for 3 underwater light of 300W.

| | Code | Standard Pack | Standard Weight in kg | Standard Volume in $m^3$ |
|---|---|---|---|---|
| Type A | **70425** | 1 | 9.5 | - |
| Type B | **70426** | 1 | 9.5 | - |
| Type C | **70427** | 1 | 9.5 | - |
| Type D | **70428** | 1 | 9.5 | - |



## Encapsulated security transformer IP-65 for pool

Manufactured according to the rules UNE-EN 61558 and directive CE.
- IP-657 housing protection degree.
- Transformer Class II. total protection against electric shock.
- Self-extinguishing housing IEC 695-2-1.
- Frequency 50/60 Hz.

| | Code | Standard Pack | Standard Weight in kg | Standard Volume in $m^3$ |
|---|---|---|---|---|
| 130 VA from 220-240V to 12 V | **35807** | 1 | 3.2 | 0.02 |
| 400 VA to 220-240V to 12-17 V | **35385** | 1 | 6.8 | 0.04 |
| 800 VA from 220-240V to 12-17 V | **35386** | 1 | 10.4 | 0.04 |

## COUNTERCURRENT SWIMMING EQUIPMENT – SELECTION GUIDE

| EQUIPMENT WITH STAINLESS STEEL HOUSING | EQUIPMENT WITH PLASTIC HOUSING | TWIN EQUIPMENT |
|---|---|---|

**GRAB RAILS** | **GRAB RAILS**



| S.S. hand grip 65535 | Rectang. Polished S.S. 00246 | Rectang. Painted S.S. 09447 | Round Painted S.S. 07536 | Demi-circular Polished S.S. 37214 | S.S. hand grip 65535 | Rectang. Polished S.S. 00246 | Rectang. Painted S.S. 09447 | Round Painted S.S. 07536 | Demi-circular Polished S.S. 37214 | Polished S.S. 05557 |
|---|---|---|---|---|---|---|---|---|---|---|
| NOZZLE SET | NOZZLE SET | | | | NOZZLE SET | NOZZLE SET | | NOZZLE SET | NOZZLE SET | |



| Basic NL | Rectang. Plastic white | Round Plastic white | Basic NL | Rectang. Plastic white | Round Plastic white | With hand grips built-in white plastic | Rectangular plastic white |
|---|---|---|---|---|---|---|---|
| 65489 | 11501 | 11500 | 65489 | 11015 | 11016 | 11013 | 11508 |
| HOUSING | | | HOUSING | | | HOUSING | |

| For concrete pool | For prefabricated pool | For concrete pool | For prefabricated pool | For concrete pool | For prefabricated pool |
|---|---|---|---|---|---|



| Housing in S.S. 00243 | Housing in S.S. 00243 + Accessories 00248 | Housing in plastic 11502 | Housing 11502 + Accessories 11503 | Housing in S.S. 05555 | Housing in S.S. 05555 + Accessories 05558 |
|---|---|---|---|---|---|

**PUMPS** | **PUMPS**



| | | | | | | | |
|---|---|---|---|---|---|---|---|
| 230 V II 1.5 Kw (2 HP) | 11505 | 230 V II 1.5 Kw (2 HP) | 28566 | 230/400 V III 3.3 Kw (4.5 HP) | 11509 | 230/400 V III 3.3 Kw (4.5 HP) | 11509 |
| 230 V II 2.2 Kw (3 HP) | 25415 | 230 V II 2.2 Kw (3 HP) | 28568 | 230/400 V III 4 Kw (5.5 HP) | 65549 | 230/400 V III 4 Kw (5.5 HP) | 65549 |
| 230/400 V III 2.60 Kw (3.5 HP) | 11504 | 230/400 V III 2.2 Kw (3 HP) | 30774 | | | | |

**CONTROL BOXES** | **CONTROL BOXES**



| | | | |
|---|---|---|---|
| 230 V II 1.5 Kw (2 HP) | 11507 | 400 V III 3.3 Kw (4.5 HP) | 11510 |
| 230 V II 2.2 Kw (3 HP) | 25456 | 400 V III 4 Kw (5.5 HP) | 65536 |
| 400 V III 2.2 Kw (3 HP) | 32151 | | |
| 230/400 V III 2.6 Kw (3.5 HP) | 11506 | | |
| 400 V III 3,3 Kw (4.5 HP) | 11510 | | |
| 400 V III 4 Kw (5.5 HP) | 65536 | | |

+ info
Further information on **PRODUCTS**
www.astralpool.com

# COUNTERCURRENT SWIMMING EQUIPMENT



## Basic NL countercurrent nozzle set

Countercurrent nozzle set in a new design with polished AIISI-316 stainless steel front cover, interchangeable with nozzle sets 11499 and 11014, multi-directional water-air return nozzle, and suction capacity 60 m³/h, and on-off push button. Optional hand grip (code 65535).

| | Code | Standard Pack | Standard Weight in kg | Standard Volume in m³ |
|---|---|---|---|---|
| Basic NL nozzle set. for both stainless steel and plastic housing. | **65489** | 1 | - | - |



## Basic ND countercurrent kit

Countercurrent kit made up of:
- Return inlet (air-water) made of AISI-316 stainless steel.
- Illuminated ON-OFF piezoelectric push button made of AISI-316 stainless steel.
- Suction grille with a capacity of 60 m³/h made of polished AISI-316 stainless steel.
- 5.5 HP pump.
- Flow rate of 60 m³/h.
- Power control cabinet.

| | Code | Standard Pack | Standard Weight in kg | Standard Volume in m³ |
|---|---|---|---|---|
| Basic ND unit for concrete pools | **65498** | 1 | - | - |
| Basic ND unit for liner pools | **66044** | 1 | - | - |



## Advance ND countercurrent kit

Countercurrent kit made up of:
- Return inlet (air-water) made of polished AISI-316 stainless steel.
- Illuminated ON-OFF and +/- piezoelectric push button made of AISI-316 stainless steel.
- Suction grille with a capacity of 60 m³/h made of polished AISI-316 stainless steel.
- 5.5 HP pump.
- Flow rate adjustable from 23 m³/h to 60 m³/h thanks to a variable-speed drive.
- Power control cabinet.

| | Code | Standard Pack | Standard Weight in kg | Standard Volume in m³ |
|---|---|---|---|---|
| Advance ND unit for concrete pools | **65497** | 1 | - | - |
| Advance ND unit for liner pools | **66043** | 1 | - | - |



## Nozzle assemblies with round front plate in white plastic

Made up of: Front plate, nozzle assembly, on-off and air regulation remote control.
Components in AISI-316 stainless steel.

| | Code | Standard Pack | Standard Weight in kg | Standard Volume in m³ |
|---|---|---|---|---|
| For stainless steel housing | **11500** | 1 | 5.0 | 0.045 |
| For plastic housing | **11016** | 1 | 4.4 | 0.056 |



## Nozzle assemblies with rectangular front plate in white plastic

Made up of: Front plate, nozzle assembly, on-off and air regulation remote control.
Components in AISI-316 stainless steel.

| | Code | Standard Pack | Standard Weight in kg | Standard Volume in m³ |
|---|---|---|---|---|
| For stainless steel housing | **11501** | 1 | 5.0 | 0.045 |
| For plastic housing | **11015** | 1 | 3.9 | 0.039 |

For all products on this page

Complies with Standard **EN 13451-1-3**

Complies with Standards **EN 16582-1** **EN 16713-2**

+ info
PDB
Further information on **PRODUCTS**
www.astralpool.com

# COUNTERCURRENT SWIMMING EQUIPMENT



## Nozzle assemblies with rectangular front plate in white plastic and built-in hand grip

Made up of: Front plate, nozzle assembly, on-off and air regulation remote control.

| | Code | Standard Pack | Standard Weight in kg | Standard Volume in $m^3$ |
|---|---|---|---|---|
| For plastic housing | **11013** | 1 | 4.2 | 0.039 |



## Front suction countercurrent unit hand grip

Handrail made of AISI-316 stainless steel for assembly with new Basic NL nozzle set (code 65489).

| Code | Standard Pack | Standard Weight in kg | Standard Volume in $m^3$ |
|---|---|---|---|
| **65535** | 1 | - | - |



## Rectangular hand grips in painted AISI-316 S.S.

Specially designed for 11015 & 11501 nozzles. Nevertheless can be mounted on any of the other nozzle sets except for the 11013.

| Code | Standard Pack | Standard Weight in kg | Standard Volume in $m^3$ |
|---|---|---|---|
| **09447** | 1 | 1.4 | 0.013 |



## Rectangular hand grips in polished AISI-316 S.S.

Specially designed for 11014 and 11499 nozzles. Nevertheless can be mounted on any of the other nozzle sets except for the 11013.

| Code | Standard Pack | Standard Weight in kg | Standard Volume in $m^3$ |
|---|---|---|---|
| **00246** | 1 | 1.48 | 0.01 |



## Round Hand grips in painted AISI-316 S.S.

Specially designed for 11016 & 11500 nozzles. Nevertheless can be mounted on any of the other nozzle sets except for the 11013.

| Code | Standard Pack | Standard Weight in kg | Standard Volume in $m^3$ |
|---|---|---|---|
| **07536** | 1 | 1.6 | 0.02 |



## Semicircular grab rail in polished AISI-316 S.S.

AISI-316 polished stainless steel. Specially indicated for Marlin counter current swimming kit models; Marlin 30 II, Marlin 30 III and Marlin 45 III, although it may be mounted on any of the inlet sets, except for model 11013.

| Code | Standard Pack | Standard Weight in kg | Standard Volume in $m^3$ |
|---|---|---|---|
| **37214** | 1 | 1.62 | 0.018 |

For all products on this page

Complies with Standard **EN 13451-1-3**

Complies with Standards **EN 16582-1** **EN 16713-2**

# COUNTERCURRENT SWIMMING EQUIPMENT



## S.S. Housing

In AISI-316 stainless steel. 240 mm in depth. Suitable for both, concrete and prefabricated pools. Supplied with sealing elements and 3 m cable conduit.

| Code | Standard Pack | Standard Weight in kg | Standard Volume in $m^3$ |
|---|---|---|---|
| **00243** | 1 | 7.79 | 0.04 |



## Accessory for fitting in liner and fibreglass pools

In AISI-316 stainless steel, with seals and screws.

| Code | Standard Pack | Standard Weight in kg | Standard Volume in $m^3$ |
|---|---|---|---|
| **00248** | 1 | 0.85 | 0.002 |



## S.S. Housing

Made in unalterable plastic. Supplied with sealing elements and two conduits of 3 m each.

| Code | Standard Pack | Standard Weight in kg | Standard Volume in $m^3$ |
|---|---|---|---|
| **11502** | 1 | 5.0 | 0.036 |



## Accessory for fitting in liner and fibreglass pools

In plastic, with seals and screws.

| Code | Standard Pack | Standard Weight in kg | Standard Volume in $m^3$ |
|---|---|---|---|
| **11503** | 1 | 0.6 | 0.003 |



## Massage hose

To be fitted on to the discharge nozzle. Length: 1.5 m.

| Code | Standard Pack | Standard Weight in kg | Standard Volume in $m^3$ |
|---|---|---|---|
| **00247** | 1 | 1.22 | 0.01 |



## Pumps

Made of plastic. Double insulation motor shaft. IP-54 motor protection.

| | Code | Standard Pack | Standard Weight in kg | Standard Volume in $m^3$ |
|---|---|---|---|---|
| 1.5 kW (2 hp) Single-phase 230 V 50 Hz | **11505** | 1 | 27 | 0.098 |
| 2.2 kW (2 hp) Single-phase 230 V 50 Hz | **25415** | 1 | 29 | 0.098 |
| 2.60 kW (2 hp) Three-phase 230 V 50 Hz | **11504** | 1 | 30.5 | 0.098 |

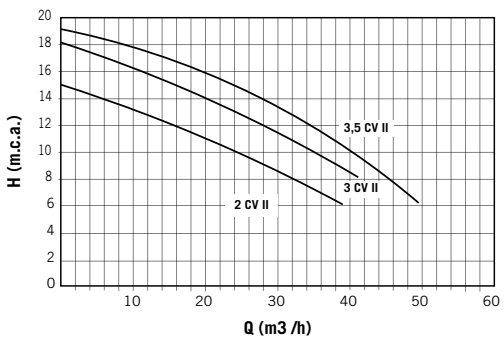

+ info
Further information on **PRODUCTS**
www.astralpool.com

# COUNTERCURRENT SWIMMING EQUIPMENT



## CCIV vertical drive pumps

Specially designed for countercurrent equipment with high performance output with larger diameter of discharge and suction. It is important not to add any special features to the installation as they may limit the performance significantly. All the pumps metal components in contact with water are manufactured in AISI-316 Stainless Steel, highly resistant to corrosion.

| | Code | Standard Pack | Standard Weight in kg | Standard Volume in $m^3$ |
|---|---|---|---|---|
| Power 1.5 Kw 2 hp Monoph., 230 V 50 Hz | **28566** | 1 | 21.0 | 0.095 |
| Power 2.2 Kw 3 hp Monoph., 230 V 50 Hz | **28568** | 1 | 22.6 | 0.095 |
| Power 2.2 Kw 3 hp Three-ph. 230/240 V 50 Hz | **30774** | 1 | 22.5 | 0.095 |
| Power 4 Kw 5 hp Three-ph. 230/240 V 50 Hz | **65549** | 1 | - | - |

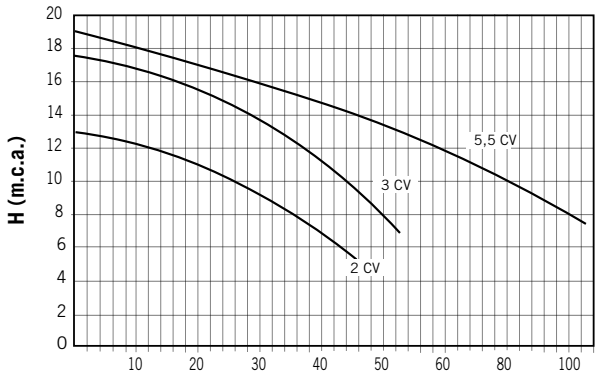




## Control boxes

Electro-pneumatic box. Pumps are operated through the nozzle faceplate buttons.

| | Code | Standard Pack | Standard Weight in kg | Standard Volume in $m^3$ |
|---|---|---|---|---|
| For 230 V II 1.5 kW (2 HP) pumps | **11507** | 1 | 1.2 | 0.004 |
| For 230 V II 2.2 kW (3 HP) pumps | **25456** | 1 | 1.2 | 0.004 |
| For 400 V III 2.2 Kw (3 HP) pumps | **32151** | 1 | 1.2 | 0.004 |
| For 230/400 V III 2.6 kW (3.5 HP) pumps | **11506** | 1 | 1.2 | 0.004 |
| For 400 V III 4 kW (5.5 HP) pumps | **65536** | 1 | - | - |



## Nozzle assemblies with rectangular front plate in white plastic

Composed of: Faceplate, nozzle, On/OFF switch and air regulation knob. Components in AISI-316 Stainless Steel.

| Code | Standard Pack | Standard Weight in kg | Standard Volume in $m^3$ |
|---|---|---|---|
| **11508** | 1 | 7.0 | 0.065 |

UNE-EN 13451-1-3
Complies with Standard **EN 13451-1-3**

UNE-EN 16582-1 EN 16713-2
Complies with Standards **EN 16582-1** **EN 16713-2**



## Grab rails

In AISI-316 Stainless Steel. (2 units).

| Code | Standard Pack | Standard Weight in kg | Standard Volume in $m^3$ |
|---|---|---|---|
| **05557** | 1 | 1.9 | 0.01 |

UNE-EN 13451-1-3
Complies with Standard **EN 13451-1-3**

UNE-EN 16582-1 EN 16713-2
Complies with Standards **EN 16582-1** **EN 16713-2**

## COUNTERCURRENT SWIMMING EQUIPMENT



### Twin Housing

In AISI-316 stainless steel. 240 mm in depth. Suitable for both, concrete and prefabricated pools. Supplied with sealing elements and 3 m cable conduit.

| Code | Standard Pack | Standard Weight in kg | Standard Volume in $m^3$ |
|---|---|---|---|
| **05555** | 1 | 11.4 | 0.06 |



### Accessory for mounting in prefabricated and liner pools

In AISI-316 Stainless Steel. With gaskets and screws.

| Code | Standard Pack | Standard Weight in kg | Standard Volume in $m^3$ |
|---|---|---|---|
| **05558** | 1 | 1.35 | 0.01 |



### Pumps

Made of plastic. Double insulation motor shaft. IP-54 motor protection

| | Code | Standard Pack | Standard Weight in kg | Standard Volume in $m^3$ |
|---|---|---|---|---|
| 3.3 kW power (4.5 HP)<br>Three-phase 230/400 V 50 Hz | **11509** | 1 | 32.5 | 0.098 |

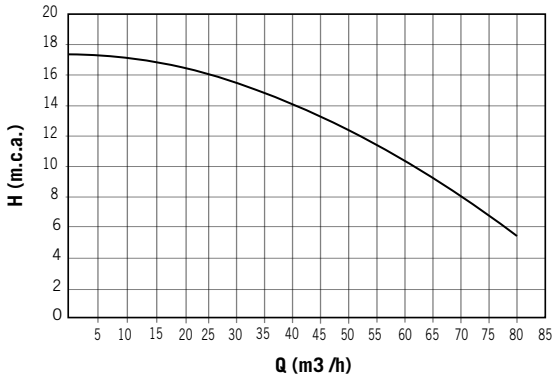




### Control boxes

Electro-pneumatic box. Pumps are operated through the nozzle faceplate buttons.

| | Code | Standard Pack | Standard Weight in kg | Standard Volume in $m^3$ |
|---|---|---|---|---|
| For 400 V III 3.3 Kw (4.5 HP) pumps | **11510** | 1 | 1.2 | 0.004 |

Complies with Standard **EN 13451-1-3**

Complies with Standards **EN 16582-1** **EN 16713-2**

# COUNTERCURRENT SWIMMING EQUIPMENT



## Marlin XS countercurrent swimming equipment

New set nozzle Mini Eco counter current unit. Highly competitive in its hydraulic performance. It can be installed in both concrete and prefabricated pools. Manufactured in white plastic parts. Consists of front panel nozzle set, stop/start push button and housing. Supplied with installation kit. Does not include pump or control box.

| | Code | Standard Pack | Standard Weight in kg | Standard Volume in $m^3$ |
|---|---|---|---|---|
| Marlin XS | **45618** | 1 | 1.553 | 0.015 |



**Marlin:** inexpensive countercurrent swimming unit. The innovative design and concept supplied as a kit (including face plate, housing, control box and pump) makes it a feature that will add significant value to your pool. A highly competitive product thanks to its high performance hydraulic features, the Marlin countercurrent system is available in 3 models: the Marlin 30 II, the Marlin 30 III and the Marlin 45 III. Grab rails and hydromassage hose may be added as optional features.



## Marlin 30 II (single-phase)

Consists of: Nozzle faceplate, plastic housing, control box and pump 2.2 kW (3 HP) 230 V II 50 Hz.

| Code | Standard Pack | Standard Weight in kg | Standard Volume in $m^3$ |
|---|---|---|---|
| **35375** | 1 | 37.4 | 0.260 |

## Marlin 30 III (three-phase)

Consists of: Nozzle faceplate, plastic housing, control box and pump 2.2 kW (3 HP) 400 V III 50 Hz.

| Code | Standard Pack | Standard Weight in kg | Standard Volume in $m^3$ |
|---|---|---|---|
| **35376** | 1 | 37.4 | 0.260 |

## Marlin 45 III (three-phase)

Consists of: Nozzle faceplate, plastic housing, control box and pump 3.3 kW (4.5 HP) 400 V III 50 Hz.

| Code | Standard Pack | Standard Weight in kg | Standard Volume in $m^3$ |
|---|---|---|---|
| **35377** | 1 | 42.2 | 0.260 |

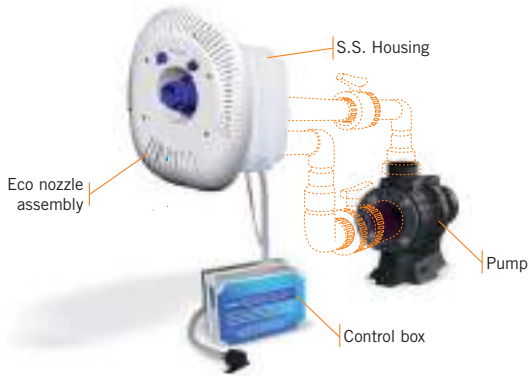


**Part 11503 required for liner pools.**

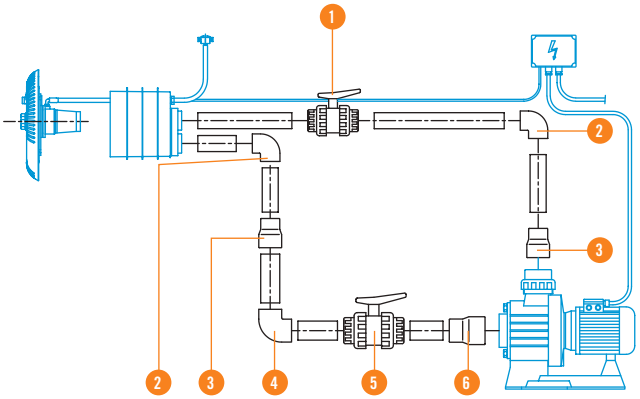


**Accessories (not included in the kit)**

| Position | Quantity | Denomination | Code |
|---|---|---|---|
| 1 | 1 | PVC Ball valve Ø63 mm | **02458** |
| 2 | 2 | PVC elbow 90° Ø63 mm | **01717** |
| 3 | 2 | Conical reduction Ø90-75x63 mm | **01993** |
| 4 | 1 | PVC elbow 90° Ø75 mm | **01718** |
| 5 | 1 | PVC Ball valve Ø75 mm | **02459** |
| 6 | 1 | Conical reduction Ø110-90x75 mm | **01997** |
| - | - | PVC pipe Ø 63 mm PN-6 | **02692** |
| - | - | PVC pipe Ø75 mm PN-6 | **02693** |

+ info
Further information on **PRODUCTS**
www.astralpool.com

# BLOWER PUMPS



## Air pump

Air pump designed for spas, baths, hydromassage installations and similar which produces a constant stream of air bubbles at medium and high air volume levels. It can also be used to stir up the filter bed, for example in back wash cycles where a low intensity air current is required.

The filter casing and impeller are made from an injected aluminium alloy whilst the motor spindle is manufactured from stainless steel, with the impeller dynamically balanced and directly adapted to the spindle. The motors, single phase or 3 phase for continuous use, are made from steel in compliance with CEI 2/3 1988 regulations, and feature IP54 external protection and class-F insulation. The standard voltages are100-120/200-240V for the monophase range and 200-240/380-440V for the triphase models, at 50/60Hz. The pumps can be mounted horizontally or vertically. Moreover, since there is no contact between the mobile parts and the pump static discharges, neither lubrication nor maintenance is necessary and it does not cause wear on the parts.

The turbines have a maximum working temperature of 40ºC. Do not use in conjunction with aggressive, inflammable or explosive gases.

| Model | Code | Frequency (Hz) | Voltage (V) | Phase | Flow rate ($m^3/h$) | Max. Pressure (mbar) | Standard Weight kg | Standard Volume $m^3$ |
|---|---|---|---|---|---|---|---|---|
| **Blower 0.4 kW** | **33970-2450** | 50 | Δ 200-240 Y 345-415 | 3 | 80 | 130 | 10 | 0.045 |
| **Blower 0.5 kW** | | 60 | Δ 220-275 Y 380-480 | 3 | 98 | 170 | | |
| **Blower 0.85 kW** | **35388-2450** | 50 | 200-240 | 1 | 145 | 160 | 17 | 0.059 |
| **Blower 0.95 kW** | | 60 | 200-240 | 1 | 175 | 160 | | |
| **Blower 0.85 kW** | **35387-2450** | 50 | Δ 200-240 Y 345-415 | 3 | 145 | 160 | 16 | 0.045 |
| **Blower 0.95 kW** | | 60 | Δ 220-275 Y 380-480 | 3 | 175 | 160 | | |
| **Blower 1.3 kW** | **31090-2450** | 50 | 200-240 | 1 | 210 | 170 | 23 | 0.059 |
| **Blower 1.5 kW** | | 60 | 200-240 | 1 | 255 | 140 | | |
| **Blower 1.3 kW** | **31091-2450** | 50 | Δ 200-240 Y 345-415 | 3 | 210 | 170 | 22 | 0.059 |
| **Blower 1.5 kW** | | 60 | Δ 220-275 Y 380-480 | 3 | 255 | 140 | | |
| **Blower 1.5 kW** | **33971-2450** | 50 | 200-240 | 1 | 210 | 220 | 24 | 0.064 |
| **Blower 1.75 kW** | | 60 | 200-240 | 1 | 255 | 220 | | |
| **Blower 1.6 kW** | **31092-2450** | 50 | Δ 200-240 Y 345-415 | 3 | 210 | 220 | 23 | 0.064 |
| **Blower 2.1 kW** | | 60 | Δ 220-275 Y 380-480 | 3 | 255 | 220 | | |
| **Blower 1.6 kW 2V** | **35389-2450** | 50 | Δ 200-240 Y 345-415 | 3 | 150 | 300 | 25 | 0.087 |
| **Blower 2.06 kW 2V** | | 60 | Δ 220-275 Y 380-480 | 3 | 180 | 310 | | |
| **Blower 2.2 kW** | **31093-2450** | 50 | Δ 200-240 Y 345-415 | 3 | 318 | 230 | 30 | 0.097 |
| **Blower 2.55 kW** | | 60 | Δ 220-275 Y 380-480 | 3 | 376 | 220 | | |
| **Blower 3.0 kW 2V** | **31094-2450** | 50 | Δ 200-240 Y 345-415 | 3 | 230 | 410 | 40 | 0.126 |
| **Blower 3.45 kW 2V** | | 60 | Δ 220-275 Y 380-480 | 3 | 275 | 400 | | |
| **Blower 3.0 kW** | **31095-2450** | 50 | Δ 200-240 Y 345-415 | 3 | 318 | 280 | 36 | 0.097 |
| **Blower 3.45 kW** | | 60 | Δ 220-275 Y 380-480 | 3 | 376 | 280 | | |
| **Blower 4.3 kW 2V** | **31096-2450** | 50 | Δ 345-415 Y 600-720 | 3 | 520 | 600 | 54 | 0.217 |
| **Blower 4.8 kW 2V** | | 60 | Δ 380-480 Y 660-720 | 3 | 385 | 320 | | |
| **Blower 5.5 kW** | **31097-2450** | 50 | Δ 345-415 Y 600-720 | 3 | 530 | 320 | 63 | 0.16 |
| **Blower 6.3 kW** | | 60 | Δ 380-480 Y 660-720 | 3 | 620 | 340 | | |
| **Blower 5.5 kW 2V** | **33972-2450** | 50 | Δ 345-415 Y 600-720 | 3 | 320 | 515 | 66 | 0.201 |
| **Blower 6.3 kW 2V** | | 60 | Δ 380-480 Y 660-720 | 3 | 385 | 530 | | |
| **Blower 7.5 kW** | **31098-2450** | 50 | Δ 345-415 Y 600-720 | 3 | 530 | 400 | 66 | 0.16 |
| **Blower 8.6 kW** | | 60 | Δ 380-480 Y 660-720 | 3 | 620 | 400 | | |
| **Blower 11 kW 2V** | **33973-2450** | 50 | Δ 345-415 Y 600-720 | 3 | 520 | 600 | 104 | 0.353 |
| **Blower 12.6 kW 2V** | | 60 | Δ 380-480 Y 660-720 | 3 | 620 | 600 | | |
| **Blower 12.5 kW** | **33974-2450** | 50 | Δ 345-415 Y 600-720 | 3 | 1050 | 270 | 116 | 0.353 |
| **Blower 14.5 kW** | | 60 | Δ 380-480 Y 660-720 | 3 | 1250 | 260 | | |





# WATER TREATMENT PRODUCTS


169 • Regulators
170 • Disinfectants with chlorine
171 • Multi-action disinfectants with chlorine
173 • Bromine disinfectants
173 • Algicides
174 • Concentrated algicides
175 • Multi-purpose pods
175 • Flocculants
177 • Cleaners
178 • Winterising products
179 • Accessories
180 • Blue Connect range
181 • Blue range products
182 • Blue range accessories
188 • Pocket gauges
188 • Test kits and photometers

# AstralPool presents its new labelling for chemical products

- Image overhaul
- Icon displays
- Differentiation by colour

An easy and convenient way of identifying ourselves.

## Label

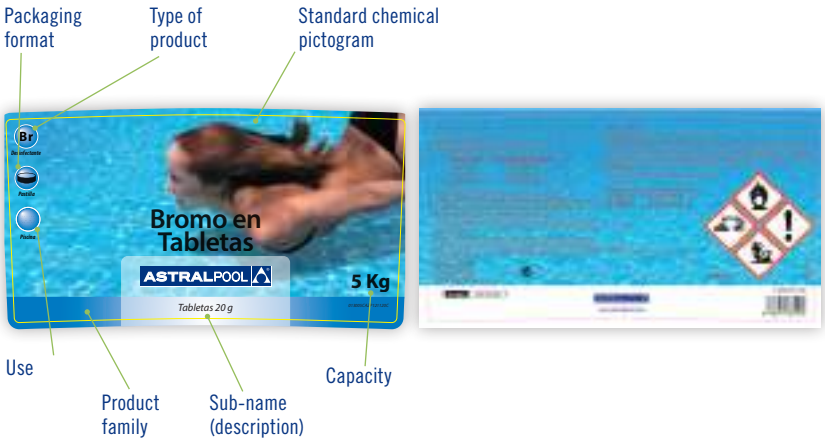


## Icon description

### Type of product

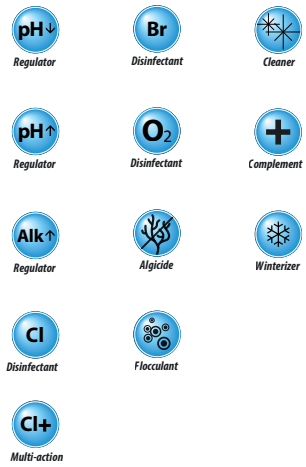


## Product families by colour




- Disinfection
- Multi-action




- Regulators




- Algaecides




- Cleaning
- Flocculants
- Accessories

### Packaging Presentation




### Use

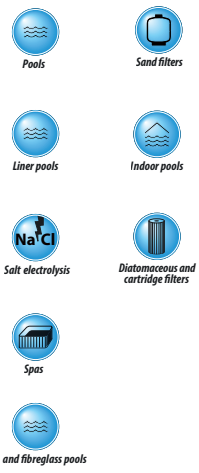

For minimum amounts, ask your dealer

# REGULATORS



## Solid pH Minor

Solid pH reducer. For adjusting the pH to between 7.2 and 7.6.

| | Packaging | Code | Standard Pack | Kg/l/pallet |
|---|---|---|---|---|
| Square packaging | 1.5 kg | **11384** | 18 | 600 |
| Square packaging | 8 kg | **11385** | 4 | 960 |
| Square packaging | 16 kg | **16540** | 2 | 768 |
| | 40 kg | **11974** | 1 | 480 |





## Solid pH Plus

Solid pH enhancer. For adjusting the pH to between 7.2 and 7.6.

| | Packaging | Code | Standard Pack | Kg/l/pallet |
|---|---|---|---|---|
| Square packaging | 1 kg | **16538** | 18 | 400 |
| Square packaging | 6 kg | **11386** | 4 | 864 |
| Square packaging | 12 kg | **16539** | 2 | 720 |
| Square packaging | 35 kg | **15975** | 1 | 630 |





## Liquid pH Minor

Liquid pH reducer. Ideal for dosing with a pump.

| Packaging | Code | Standard Pack | Kg/l/pallet |
|---|---|---|---|
| 10 l | **43290** | 1 | 600 |
| 25 l | **16541** | 1 | 600 |



## Liquid pH Plus

Liquid pH enhancer. Ideal for dosing with a pump.

| Packaging | Code | Standard Pack | Kg/l/pallet |
|---|---|---|---|
| 25 l | **16542** | 1 | 600 |



## Alkalinity enhancer

Powder for increasing water alkalinity when it falls below 125 ppm.

| | Packaging | Code | Standard Pack | Kg/l/pallet |
|---|---|---|---|---|
| Square packaging | 6 kg | **15976** | 4 | 864 |
| | 40 kg | **19933** | 1 | 480 |

For minimum amounts, ask your dealer

# DISINFECTANTS WITH CHLORINE

**Non-combustible chlorine. Non-combustible, multi-action trichloride tablets and blocks are also available. Non-combustible products are less dangerous, according to current laws, in comparison with combustible chlorinated products and, therefore, have the advantage of being able to be stored anywhere, pursuant to Royal Decree 379/2001 and the Seveso II Directive.**



## 55% dichloride granules

Dichloride granules with 55% free available chlorine.

| | Packaging | Code | Standard Pack | Kg/l/pallet |
|---|---|---|---|---|
| Square packaging | 1 kg | **11393** | 18 | 400 |
| Square packaging | 5 kg | **11394** | 4 | 720 |
| Square packaging | 10 kg | **16478** | 2 | 600 |
| | 30 kg | **11395** | 1 | 540 |
| | 50 kg | **11396** | 1 | 600 |



## Fast-dissolving chlorine tablets

Trichloride 20-g tablets with 50% free available chlorine.

| | Packaging | Code | Standard Pack | Kg/l/pallet |
|---|---|---|---|---|
| Square packaging | 1 kg | **11397** | 18 | 400 |
| Square packaging | 5 kg | **11398** | 4 | 720 |
| Square packaging | 10 kg | **16547** | 2 | 600 |
| | 25 kg | **11399** | 1 | 450 |



## Trichloride powder

Trichloride powder with 90% free available chlorine.

| | Packaging | Code | Standard Pack | Kg/l/pallet |
|---|---|---|---|---|
| Square packaging | 1 kg | **11400** | 18 | 400 |
| Square packaging | 5 kg | **11401** | 4 | 720 |
| Square packaging | 12 kg | **19706** | 2 | 720 |
| | 30 kg | **11402** | 1 | 540 |
| | 50 kg | **11403** | 1 | 600 |



## Trichloride granules

Trichloride granules with 90% free available chlorine.

| | Packaging | Code | Standard Pack | Kg/l/pallet |
|---|---|---|---|---|
| Square packaging | 1 kg | **11404** | 18 | 400 |
| Square packaging | 5 kg | **11405** | 4 | 720 |
| Square packaging | 12 kg | **16548** | 2 | 720 |
| | 30 kg | **11406** | 1 | 540 |
| | 50 kg | **11407** | 1 | 600 |

For minimum amounts, ask your dealer

## DISINFECTANTS WITH CHLORINE



### 250-g trichloride tablets

Slow-dissolving 250-g trichloride blocks with 90% free available chlorine.

| | Packaging | Code | Standard Pack | Kg/l/pallet |
|---|---|---|---|---|
| Square packaging | 1 kg | **34433** | 18 | 540 |
| Square packaging | 5 kg | **34434** | 4 | 720 |
| Square packaging | 10 kg | **34435** | 2 | 720 |
| | 25 Kg | **34436** | 1 | 450 |
| | 50 Kg | **34437** | 1 | 600 |





### Trichlorine block 500

Slow-dissolving 500-g trichloride block, in individual film wrappers, with 90% free available chlorine.

| | Packaging | Code | Standard Pack | Units/pallet |
|---|---|---|---|---|
| Trichlorine block 500 | 500 g | **25315** | 12 | 720 |

## MULTI-ACTION DISINFECTANTS WITH CHLORINE



### Action 10

New 250-g multipurpose tablets that perform the functions of the following 10 products: disinfectant, algicide, bactericide, algaestat, virucide, fungicide, flocculant-coagulant, pH reducer, stabilizer and descaler.

| | Packaging | Code | Standard Pack | Kg/l/pallet |
|---|---|---|---|---|
| Square packaging | 5 kg | **25325** | 4 | 720 |



### Multi-action block

Slow-dissolving, 500-g blocks that act as an algicide, bactericide and flocculant. In individual film wrappers.

| | Packaging | Code | Standard Pack | Kg/l/pallet |
|---|---|---|---|---|
| | 5 kg | **25316** | 4 | 480 |
| | 25 kg | **25355** | 1 | 450 |



### Astral Duralong

All-in-one bactericide, algicide and flocculant for pool water treatment. Floating dispenser included

| | Packaging | Code | Standard Pack | Units/pallet |
|---|---|---|---|---|
| | 1.75 kg | **69871** | 8 | 128 |

For minimum amounts, ask your dealer

# MULTI-ACTION DISINFECTANTS WITH CHLORINE



## Multi-action granules

Granules that act as a bactericide, algicide and flocculant.

| Packaging | Code | Standard Pack | Kg/l/pallet |
|---|---|---|---|
| 1 kg | **15983** | 18 | 400 |
| 5 kg | **15984** | 4 | 480 |
| 30 kg | **15985** | 1 | 540 |





## Multi-action 250-g tablet

Slow-dissolving, 250-g tablet that acts as an algicide, bactericide and flocculant.

| Packaging | Code | Standard Pack | Kg/l/pallet |
|---|---|---|---|
| Square packaging 1 kg | **34438** | 18 | 540 |
| Square packaging 5 kg | **34439** | 4 | 720 |
| Square packaging 10 kg | **34440** | 2 | 600 |
| 25 kg | **34441** | 1 | 450 |



## Special multi-purpose tablet for hard water

Solid compound in tablet form, specially formulated so that a single dose will remove bacteria, viruses and microorganisms from pool water, which prevents algae from growing, limescale from forming and keeps the water crystal clear.

| Packaging | Code | Standard Pack | Kg/l/pallet |
|---|---|---|---|
| 1 kg | **40935** | 12 | 576 |
| 5 kg | **40936** | 4 | 720 |
| 10 kg | **40937** | 2 | 300 |
| 25 kg | **40938** | 1 | 450 |



## BROMINE DISINFECTANTS

### Bromine tablets

Slow-dissolving 20-g bromine tablets for the continuous disinfection of pools and spas. Does not smell of chlorine. High tolerance to pH levels. Powerful disinfectant and oxidising agent.

| Packaging | Code | Standard Pack | Kg/l/pallet |
|---|---|---|---|
| 5 kg | **16550** | 4 | 400 |
| 20 kg | **28740** | 1 | 540 |



## ALGICIDES



### Algicides

Prevents the formation of algae in pools.

| Packaging | Code | Standard Pack | Kg/l/pallet |
|---|---|---|---|
| 25 l | **11418** | 1 | 600 |



### Algicide with brightener

A powerful bactericide, algicide and fungicide.

| Packaging | Code | Standard Pack | Kg/l/pallet |
|---|---|---|---|
| 1 l | **11413** | 12 | 480 |
| 5 l | **11414** | 4 | 640 |
| 25 l | **11415** | 1 | 600 |



### Algicide Extra

Highly efficient non-foaming algicide that also acts as a flocculant.

| Packaging | Code | Standard Pack | Kg/l/pallet |
|---|---|---|---|
| 5 l | **24616** | 4 | 640 |
| 25 l | **11424** | 1 | 600 |

For minimum amounts, ask your dealer

# CONCENTRATED ALGICIDES

## PhosFree



Instantly removes what algae feed on.

Concentrated product: lasts for 13 weeks*

* 80 ml a week for a 50 m³ pool.

Concentrated product that prevents the formation of algae as a result of chemicals, garden fertilizers and other contaminating agents. It removes the phosphates on which algae feed, thus inhibiting their growth.

Suitable for use in all types of pools, filters and disinfection treatment systems.

- Is easy to use.
- Improves the performance of salt chlorinators.

**Recommended use:**
The concentration of phosphates should be kept below 125 ppb (parts per billion) to prevent the formation of algae.

Initial treatment for high phosphate levels:

1. Ensure the filter is clean and that the system is working properly.
2. Pour the required concentration of PhosFree in a container with water and spread the solution evenly across the surface of the pool.
3. Keep the filtration system running for at least 24 hours following application.
4. Test the phosphate level of your pool using a phosphate test kit 48 hours later. If necessary, repeat the treatment.

| | Packaging | Code | Standard Pack | Kg/l/pallet |
|---|---|---|---|---|
| PhosFree | 1 l | **65957** | 12 | 480 |
| Phosphate test strips | 25 strips | **64291** | 12 | - |



**64291**

| For a 50 m³ pool | | | | |
|---|---|---|---|---|
| **Phosphate level of the pool** | 250 ppb | 500 ppb | 1000 ppb | 1500 ppb |
| **Phosfree ml** | 150 | 300 | 600 | 900 |

## Algicide Power



More power in each drop!

Concentrated product: 25 weeks (1 l)

A fast-acting compound formulated from surfactants that displays great properties as an algicide and fungicide, which therefore prevents the formation and growth of algae in pool water.

**Prevention is better than cure:**
Concentrated maintenance product that keeps pools free of all types of algae thanks to its powerful properties.

The revolutionary dosing cap will enable you to add exactly the amount of the product you need, thus helping you to make savings and use it more efficiently.

| Packaging | Code | Standard Pack | Kg/l/pallet |
|---|---|---|---|
| 1 l | **63124** | 12 | 480 |

For minimum amounts, ask your dealer

## CONCENTRATED ALGICIDES



### Algicide Extra Power

An extra strong, fast-acting algicide with micro-flocculant properties that makes it better able to prevent the appearance of algae that live suspended in the water. **Non-foaming.**

Concentrated maintenance product that keeps pools free of all types of algae thanks to its powerful properties.

The revolutionary dosing cap will enable you to add exactly the amount of the product you need, thus helping you to make savings and use it more efficiently.

| Packaging | Code | Standard Pack | Kg/l/pallet |
|---|---|---|---|
| 1 l | **63126** | 12 | 480 |

**Non-foaming.**

**Concentrated product: 20 weeks (1 l)**

## MULTI-PURPOSE PODS




### CTX CarePods

A multipurpose product that prevents three common problems:

- Cloudiness in the water.
- Growth of algae.
- Formation of foam.

The most convenient and cleanest maintenance treatment. It has countless advantages because apart from working immediately, the water-soluble wrapper dissolves in just a few minutes and its long-term effects mean that you can forget about maintenance for longer.

Its effects last even if the water temperature rises or if there are changes in pH levels.

For all pool types treated using salt chlorination.

Each pack contains 4 CarePods that come in a water-soluble film. CarePods have been specially designed to take the place of your usual water clarifier, phosphate remover, and treatments for removing oils and lotions. It is recommended that one CarePod be placed in the skimmer basket once a week in the case of a 50 m³ pool.

| | Packaging | Code | Standard Pack | Units/pallet |
|---|---|---|---|---|
| Pack 4 CarePods | 4x28 g | **63106** | 8 packs | 960 |

**Revolutionary water care.**

**Single doses in water-soluble film.**

**Concentrated product: lasts for 4 weeks**

## FLOCCULANTS



### Natural Clarifier

This natural clarifier made from chitosan (crustacean shells) is the most effective weekly treatment for preventing the formation of foam and cloudiness in pool water. It removes all traces of body oils and lotions, as well as excess metal precipitates.

Suitable for use in all types of pools and filters.

- Keeps water crystal clear, which helps the filter collect dirt.
- Removes excess metal precipitates.
- Helps make cleaning filters quicker and easier.
- Improves the performance of salt chlorinators.

**Recommended use:**
To keep your pool water crystal clear, treat it with the recommended dose of Natural Clarifier once a week. For home pools that are used a lot or for public pools, treat the pool water with twice or three times the recommended dose.

| Packaging | Code | Standard Pack | Units/pallet |
|---|---|---|---|
| 1 l | **65956** | 12 | 480 |

**The natural way to make water clean and transparent.**

**Concentrated product: 25 weeks (1 l)**

* 40 ml a week for a 50 m³ pool.

For minimum amounts, ask your dealer

# FLOCCULANTS



## CrystalBlock – Single dose gel flocculant

The easiest way to enjoy crystal clear water. No handling or complicated dosing systems required. It has never been easier to enjoy crystal clear water. Ideal for all pool types, except ones with cartridge or diatomaceous earth filters.

The single dose gel blocks will enable you to add the exact amount of the product with next to no effort. CrystalBlock collects colloidal particles and algae spores so that they are filtered better.

- Increases filter efficiency.
- Helps keep your pool water crystal clear.
- Improves the efficiency of disinfectants.

| Packaging | Code | Standard Pack | Units/pallet |
|---|---|---|---|
| 36 UN | **67558** | 72 | 10.800 |



## Liquid flocculant

Clarifies water by eliminating the colloidal particles that cause cloudiness in water.

| Packaging | Code | Standard Pack | Kg/l/pallet |
|---|---|---|---|
| 1 l | **11387** | 12 | 480 |
| 5 l | **11388** | 4 | 640 |
| 25 l | **11389** | 1 | 600 |



## Solid flocculant

Long-lasting improvement of water transparency through permanent flocculation.

| Packaging | | Code | Standard Pack | kg/pallet |
|---|---|---|---|---|
| 1 kg of product in 8 bags (8 bags of 125 g each) | 1 kg (8 x 125 g) | **11390** | 14 | 490 |



## Dual effect clarifier in cartridges

Smart product: it combines quick flocculation with continued clarification. Results: better disinfection and crystalline water.

| Packaging | Code | Standard Pack | kg/pallet |
|---|---|---|---|
| 1 kg | **18725** | 12 | 504 |



## Claritab Plus

**NEW FORMULA. Super concentrated dual action coagulant and flocculant tablets, specially formulated to obtain the best performance from sand filters. The slow dissolving and controlled action completely removes suspended particles in the water (metal ions, organic matter, etc.). Savings are made as fewer disinfectants are used.**

| Packaging | | Code | Standard Pack | Units/pallet |
|---|---|---|---|---|
| Blister pack with 2 tubes of 5 tablets of 20 g each | 200 g (2x5x20 g) | **25324** | 24 | 960 |

For minimum amounts, ask your dealer

# CLEANERS



## Extra descaler

Extra strong descaler. Acid.

| Packaging | Code | Standard Pack | Kg/l/pallet |
|---|---|---|---|
| 5 l | **11391** | 4 | 640 |
| 25 l | **11392** | 1 | 600 |



## Specially formulated descaler for polyester and fibreglass pools.

It combats limescale and grease without damaging pool lining.

| Packaging | Code | Standard Pack | Kg/l/pallet |
|---|---|---|---|
| 5 l | **16558** | 4 | 640 |



## Non-foaming water line degreaser

A specially formulated compound for removing scum and dirt from pool edges and walls, and areas around them that may require cleaning.

| Packaging | Code | Standard Pack | Kg/l/pallet |
|---|---|---|---|
| 1 l | **11425** | 12 | 480 |
| 5 l | **11426** | 4 | 640 |
| 25 l | **11427** | 1 | 600 |



## Gelamin

Gel descaler for pool walls and floors. Highly effective. Easy to use.

| Packaging | Code | Standard Pack | Kg/l/pallet |
|---|---|---|---|
| 5 l | **15987** | 4 | 640 |



## Gel descaler specially formulated for the water line.

Powerful liquid descaler with degreasing properties for cleaning the water line.

| Packaging | Code | Standard Pack | Kg/l/pallet |
|---|---|---|---|
| 1 l | **40931** | 12 | 480 |
| 5 l | **40932** | 4 | 640 |
| 25 l | **40934** | 1 | 600 |



## Liquid Filnet

Liquid descaler specially designed for cleaning the inside of sand filters in public pools.

| Packaging | Code | Standard Pack | Kg/l/pallet |
|---|---|---|---|
| 5 l | **16498** | 4 | 640 |
| 25 l | **16499** | 1 | 600 |

For minimum amounts, ask your dealer

# CLEANERS



## Step 1 Polisher

New

Stainless steel polisher and rust remover.

| Packaging | Code | Standard Pack | Kg/l/pallet |
|---|---|---|---|
| 750 ml | **72847** | 12 | 432 |



## Step 2 Brightener

New

Product designed to care and polish stainless steel.

| Packaging | Code | Standard Pack | Kg/l/pallet |
|---|---|---|---|
| 750 ml | **72848** | 12 | 432 |



## Solid Filnet

A solid descaler for cleaning the inside of sand filters.

| Packaging | Code | Standard Pack | Kg/l/pallet |
|---|---|---|---|
| 1 kg | **15988** | 18 | 540 |



## Stainless steel cleaner-polish

Stainless steel cleaner-polish. It removes stains and degreases all types of stainless steel surfaces.

| Packaging | Code | Standard Pack | Kg/l/pallet |
|---|---|---|---|
| 1 l | **72845*** | 12 | 480 |
| 5 l | **72846*** | 4 | 640 |

* New codes replace old codes 18713 and 16630.

# WINTERISING PRODUCTS



## Winterizer

Prevents the proliferation of algae and bacteria in the water. Prevents water from going stagnant and the build-up of limescale. Takes the strain out of spring cleaning. Non-foaming.

| Packaging | Code | Standard Pack | Kg/l/pallet |
|---|---|---|---|
| 5 l | **11430** | 4 | 640 |



## Copper-free Power Winterizer

Concentrated winterizer specially formulated for liner and polyester pools that will enable you to keep your pool water in top condition during winter as it prevents the formation of algae and bacteria. Saves water as it can be used from one season to the next.

The revolutionary dosing cap will enable you to add exactly the amount of the product you need, thus helping you to make savings and use it more efficiently.

At the end of the bathing season before ending regular maintenance treatment, a super-chlorination should be performed using dichlor granules.

It is advisable to repeat the process halfway through the winter season.

| Packaging | Code | Standard Pack | Kg/l/pallet |
|---|---|---|---|
| 1 l | **63165** | 12 | 480 |

More power in each drop!

Concentrated product:

0,5 L / 40 - 50 m³

For minimum amounts, ask your dealer

# ACCESSORIES



## Inverlong

Full treatment for pools in winter. Prevents the water from going stagnant and the proliferation of algae. Keeps the water crystal clear. Acts as a bactericide, algicide and flocculant. Comes with a floating dispenser.

| Packaging | Code | Standard Pack | Units/pallet |
|---|---|---|---|
| 1.75 kg | **69872** | 8 | 128 |



## Kit-Splash

Children's pool maintenance kit. It contains 0.5 l of dichlor granules and 0.5 l of concentrated algicide.

| Packaging | Code | Standard Pack | Units/pallet |
|---|---|---|---|
| Kit | **15986** | 14 | 294 |



## Chlorine stabilizer

Prevents the rapid breakdown of chlorine by the sun's UV rays.

| Packaging | Code | Standard Pack | Kg/l/pallet |
|---|---|---|---|
| 1 kg | **16556** | 12 | 360 |
| 5 kg | **16495** | 4 | 480 |
| 25 kg | **19935** | 1 | 450 |



## Chlorine and bromine neutralizer

For the removal of excess residual chlorine or bromine.

| Packaging | Code | Standard Pack | Kg/l/pallet |
|---|---|---|---|
| 6 kg | **16578** | 4 | 576 |



## Super descaler

Highly efficient descaler. Prevents the precipitation of lime and the build-up of limescale. Prevents pipes from getting blocked.

| Packaging | Code | Standard Pack | Kg/l/pallet |
|---|---|---|---|
| 5 l | **16555** | 4 | 640 |



## Descaler

Prevents limescale.

| Packaging | Code | Standard Pack | Kg/l/pallet |
|---|---|---|---|
| 5 l | **11431** | 4 | 640 |

# BLUE CONNECT RANGE

## Blue Connect Range - Selection guide

Blue Connect is available in different packs with different functionalities to meet different needs.

| | Blue Connect GO | Blue Connect [1] | Blue Connect Plus (Platinum) [1] | Blue Connect Plus (Gold) |
|---|---|---|---|---|
| |  |  |  |  |
| **PRODUCT** | | | | |
| **Compatibility** | Pool & Spa | Pool & Spa | Pool & Spa | Pool & Spa |
| **Sanitizer** | Chlorine<br>Bromine | Chlorine<br>Bromine | Chlorine<br>Bromine | Chlorine<br>Bromine<br>Salt |
| **Product color** | White | White | Blue | Blue |
| **ACCESSORIES & SERVICES** | | | | |
| **Blue Fit50** | Compatible | Compatible | Included in the pack | Included in the pack |
| **Blue Extender** | Compatible | Compatible | Compatible | Compatible |
| **Virtual Pool Care (Pools) access** | - | - | • | • |
| **CONNECTIVITY** | | | | |
| **Bluetooth** | • | • | • | • |
| **Sigfox** | - | 2 | 20 | 20 |
| **Wifi** | Blue Extender required | Blue Extender required | Blue Extender required | Blue Extender required |
| **SENSORS** | | | | |
| **Temperature** | • | • | • | • |
| **Ph** | • | • | • | • |
| **ORP Platinum** | • | • | • | - |
| **ORP Gold** | - | - | - | • |
| **Conductivity (Salinity)** | - | • | • | • |
| **BLUE RIIOT APP** | | | | |
| **Measurement dashboard** | • | • | • | • |
| **Step by step guide with chemical recommendations** | • | • | • | • |
| **Blue Check compatibility** | • | • | • | • |
| **Blue Riiot Premium [2]** | Subscription [3] | Subscription [3] | Lifetime included | Lifetime included |

[1] This pack is available until out of stock.

[2] Formerly Blue Plus.

[3] This pack can offer to the user advanced features and functionalities thanks to the subscription Blue Riiot Premium. More information on our website blueriiot.com.

## BLUE RANGE PRODUCTS



### Blue Connect Plus (Gold)

The smart pool analyser.

- Temperature.
- pH.
- ORP (Gold).
- Conductivity (Salinity).
- Works with Bluetooth.
- Up to 20 automatical measurements.
- Blue Riiot Pool & spa Assistant free app.
- Blue Riiot Premium lifetime.
- Blue Fit50.
- Virtual Pool Care (Pools) lifetime.
- Compatible with chlorine, bromine and salt chlorinator pools and spas.

| Code | Standard Pack | Standard Weight in kg | Standard Volume in $m^3$ |
|---|---|---|---|
| **71663** | 1 | - | - |



### Blue Connect Plus (Platinum)

The smart pool analyser.

- Temperature.
- pH.
- ORP (Platinum).
- Conductivity (Salinity).
- Works with Bluetooth.
- Up to 20 automatical measurements. Works with Bluetooth.
- Blue Riiot Pool & spa Assistant free app.
- Blue Riiot Premium lifetime.
- Blue Fit50.
- Virtual Pool Care (Pools) lifetime.
- Compatible with chlorine and bromine pools and spas. Not compatible with salt chlorinator pools and spas.

| Code | Standard Pack | Standard Weight in kg | Standard Volume in $m^3$ |
|---|---|---|---|
| **70159** | 1 | - | - |



### Blue Connect

The smart pool analyser.

- Temperature.
- pH.
- ORP (Platinum).
- Conductivity (Salinity).
- Works with Bluetooth.
- Up to 2 automatical measurements.
- Blue Riiot Pool & spa Assistant free app.
- Compatible with chlorine and bromine pools and spas. Not compatible with salt chlorinator pools and spas.

| Code | Standard Pack | Standard Weight in kg | Standard Volume in $m^3$ |
|---|---|---|---|
| **70158-R** | 1 | - | - |



### Blue Connect GO

The smart pool analyser.

- Temperature.
- pH.
- ORP (Platinum).
- Works with Bluetooth.
- Blue Riiot Pool & spa Assistant free app.
- Compatible with chlorine and bromine pools and spas. Not compatible with salt chlorinator pools and spas.

| Code | Standard Pack | Standard Weight in kg | Standard Volume in $m^3$ |
|---|---|---|---|
| **73014** | 1 | - | - |

Until end of stocks

## BLUE RANGE PRODUCTS



### Blue Check

Smart test strip (50 strips).

- pH.
- Free chlorine.
- Bromine.
- Total alkalinity.
- Total hardness.
- Cyanuric acid.
- Blue Riiot Pool & spa Assistant free app.

| Code | Standard Pack | Standard Weight in kg | Standard Volume in $m^3$ |
|---|---|---|---|
| **71664*** | 1 | - | - |
| **71665*** | 1 | - | - |

## BLUE RANGE ACCESSORIES



### Blue Fit50

50mm tapping saddle.

| Code | Standard Pack | Standard Weight in kg | Standard Volume in $m^3$ |
|---|---|---|---|
| **7015C002** | 1 | - | - |



### Blue Fit60

60mm tapping saddle.

| Code | Standard Pack | Standard Weight in kg | Standard Volume in $m^3$ |
|---|---|---|---|
| **71882** | 1 | - | - |



### Blue Extender

Wi-Fi bridge.

With Blue Extender, use Blue Connect with a Wi-Fi network.

| Code | Standard Pack | Standard Weight in kg | Standard Volume in $m^3$ |
|---|---|---|---|
| **7015C004** | 1 | - | - |



### Blue Sensor Pt

3-in-1 sensor for Blue Connect:

- Temperature, pH, ORP (platinum).
- Compatible with chlorine and bromine pools and spas.
- 2 years warranty.

| Code | Standard Pack | Standard Weight in kg | Standard Volume in $m^3$ |
|---|---|---|---|
| **7015R001** | 1 | - | - |

*71664 : Packaging in English, French, Dutch and German.
*71665 : Packaging in English, Spanish, Italian and Portuguese.

## BLUE RANGE ACCESSORIES



### Blue Sensor Au

4-in-1 sensor for Blue Connect:

- Temperature, pH, ORP (gold), conductivity (salinity).
- Compatible with chlorine, bromine and salt chlorinator pools and spas.
- 2 years warranty.

| Code | Standard Pack | Standard Weight in kg | Standard Volume in $m^3$ |
|---|---|---|---|
| **7015R002** | 1 | - | - |



### Blue Battery

Battery for *Blue Connect*:
1 year warranty.

| Code | Standard Pack | Standard Weight in kg | Standard Volume in $m^3$ |
|---|---|---|---|
| **7015C001** | 1 | - | - |




### Blue Calibration Kit

2 x 20ml packets of pH4.
2 x 20ml packets of pH7.
2 x 20ml packets of ORP 468 mV.

| Code | Standard Pack | Standard Weight in kg | Standard Volume in $m^3$ |
|---|---|---|---|
| **71666** | 6 | - | - |

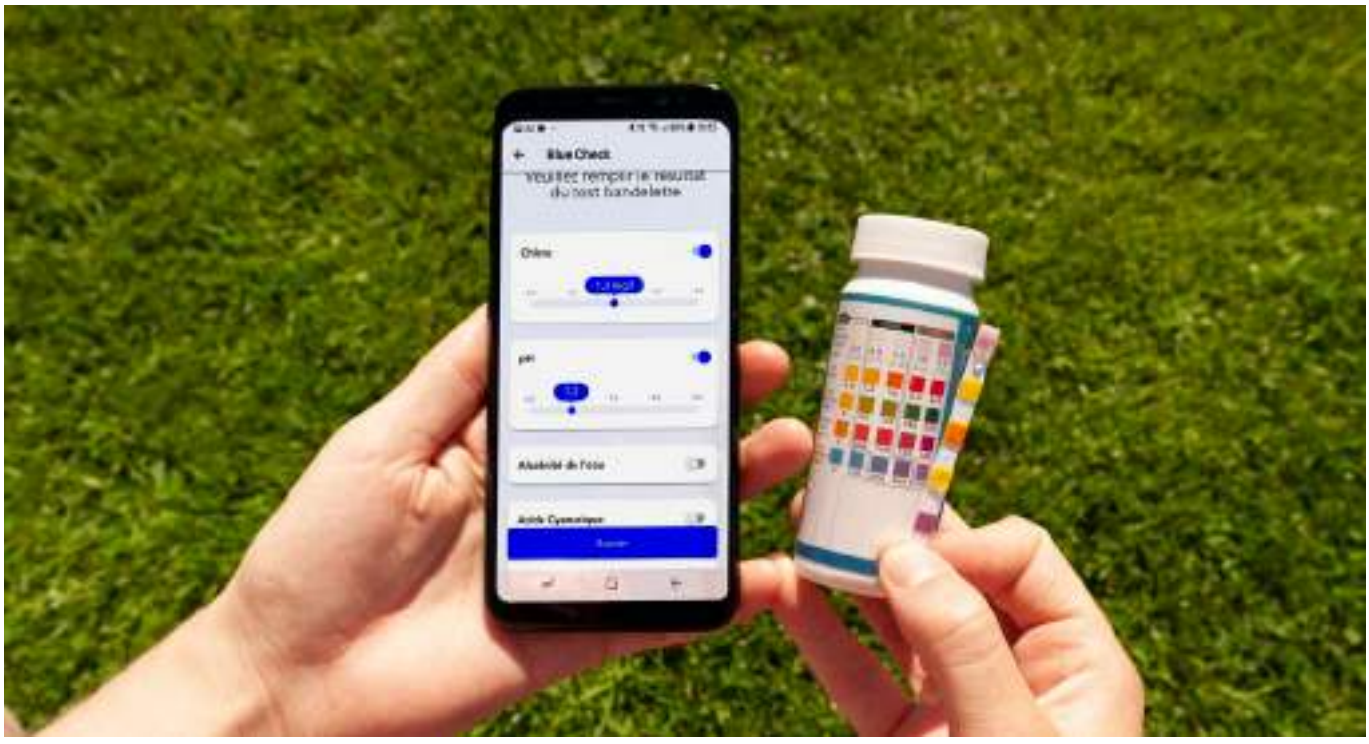

## TESTERS



### 3-in-1 test strips

Quick and easy test for free chlorine, pH and alkalinity. Contains 50 strips.

| Code | Standard Pack | Standard Weight in kg | Standard Volume in m³ |
|---|---|---|---|
| **41925** | 10 | 0.6 | 0.005 |



### 6-in-1 test strips

Quick and easy test for free chlorine, pH, alkalinity, bromine, water hardness and cyanuric acid. Contains 50 strips.

| Code | Standard Pack | Standard Weight in kg | Standard Volume in m³ |
|---|---|---|---|
| **45198** | 10 | 0.6 | 0.005 |



### Reagent refills

1 OTO and 1 phenol refill

| Code | Standard Pack | Standard Weight in kg | Standard Volume in m³ |
|---|---|---|---|
| **38638** | **144** | 8 | 0.037 |



### Basic pH and chlorine test kit - Basic Line

With OTO and phenol

| Code | Standard Pack | Standard Weight in kg | Standard Volume in m³ |
|---|---|---|---|
| **38637** | **48** | 8 | 0.054 |



### Total chlorine and pH comparison test kit

Comes in a modern, practical design. Packaged in a blue plastic box. Comes with OTO and liquid phenol.

| Code | Standard Pack | Standard Weight in kg | Standard Volume in m³ |
|---|---|---|---|
| **25353** | 25 | 4.8 | 0.019 |



### Chlorine, bromine and pH comparison test kit

Comes in a modern, practical design. Packaged in a blue plastic box. Comes with phenol and DPD tablets.

| Code | Standard Pack | Standard Weight in kg | Standard Volume in m³ |
|---|---|---|---|
| **26155** | 25 | 4.8 | 0.019 |

## TESTERS



### Liquid active oxygen tester

For testing the residual liquid active oxygen in the water.

| Code | Standard Pack | Standard Weight in kg | Standard Volume in m³ |
|---|---|---|---|
| **26082** | 1 | 15.4 | 0.0265 |



28050



28051

### Reagent refills

| | | Code | Standard Pack | Standard Weight in kg | Standard Volume in m³ |
|---|---|---|---|---|---|
| OTO refill | 15 cm³ | **28050** | 50 | 2.1 | 0.020 |
| Phenol refill | 15 cm³ | **28051** | 50 | 2.1 | 0.020 |
| OTO refill | 250 cm³ | **16623** | 20 | 5.5 | 0.010 |
| Phenol refill | 250 cm³ | **16624** | 20 | 5.5 | 0.010 |
| 1 OTO and 1 phenol refill | 15 cm³ | **16610** | 50 | 3.5 | 0.020 |



16623



16610



### Free chlorine and pH Pooltester

| | Code | Standard Pack | Standard Weight in kg | Standard Volume in m³ |
|---|---|---|---|---|
| Chlorine range: 0.1–3.0 mg/l<br>pH range: 6.8–8.2 | **03253** | 12 | 2.2 | 0.007 |
| Chlorine range: 0.5–6.0 mg/l<br>ph range: 6.8–8.2 | **01419** | 12 | 2.2 | 0.007 |



### Oxygen and pH Pooltester

| Code | Standard Pack | Standard Weight in kg | Standard Volume in m³ |
|---|---|---|---|
| **03182** | 12 | 2.2 | 0.007 |



### Bromine and pH Pooltester

| Code | Standard Pack | Standard Weight in kg | Standard Volume in m³ |
|---|---|---|---|
| **16374** | 12 | 2.2 | 0.007 |

# TESTERS



## Copper test kit

| Code | Standard Pack | Standard Weight in kg | Standard Volume in m³ |
|---|---|---|---|
| **03258** | 1 | 0.2 | 0.004 |



## Pooltester refill blister pack

20 DPD-1 tablets and 20 red phenol tablets.

| Code | Standard Pack | Standard Weight in kg | Standard Volume in m³ |
|---|---|---|---|
| **18854** | 30 | 1.4 | 0.010 |



## Reagent tablets

| | | Code | Standard Pack | Standard Weight in kg | Standard Volume in m³ |
|---|---|---|---|---|---|
| Phenol reagent tablets (pH) | 250 units | **01426** | 1 | 0.1 | 0.004 |
| DPD-1 reagent tablets | 250 units | **01424** | 1 | 0.1 | 0.004 |
| DPD 2 reagent tablets | 250 units | **43409** | 1 | 0.1 | 0.004 |
| DPD-3 reagent tablets | 250 units | **01425** | 1 | 0.1 | 0.004 |
| DPD 4 reagent tablets | 250 units | **43408** | 1 | 0.1 | 0.004 |
| MPS-OUT reagent tablets (test for the amount of chlorine in the presence of Oximines) | 250 units | **08677** | 1 | 0.1 | 0.004 |



## 3-in-1 test strips: MPS

Tests for potassium monopersulphate, pH and total alkalinity. Each pack contains 50 strips.

| Code | Standard Pack | Standard Weight in kg | Standard Volume in m³ |
|---|---|---|---|
| **57500** | - | - | - |



## 4-in-1 test strips: free chlorine

Quick and easy test for free chlorine, pH and total alkalinity in pools treated with chlorine. Each pack contains 50 strips.

| Code | Standard Pack | Standard Weight in kg | Standard Volume in m³ |
|---|---|---|---|
| **11732** | - | - | - - |



## 4-in-1 test strips: bromine

Quick and easy test for bromine, pH and total alkalinity in pools treated with bromine. Each pack contains 50 strips.

| Code | Standard Pack | Standard Weight in kg | Standard Volume in m³ |
|---|---|---|---|
| **54467** | - | - | - - |

## TESTERS



### Salt test kit

Salt test strips for checking salt levels. Salt levels must be checked on a regular basis as the water is renewed.

| Code | Standard Pack | Standard Weight in kg | Standard Volume in m³ |
|---|---|---|---|
| **07937** | - | - | - - |




### TruTest test strips

50 TruTest 3-in-1 test strips (test for free chlorine and bromine, pH and total alkalinity).

| Code | Standard Pack | Standard Weight in kg | Standard Volume in m³ |
|---|---|---|---|
| **40817** | - | - | - |




### Digital test strip reader

Digital test strip reader for measuring total free chlorine/bromine, pH and alkalinity. It combines the simplicity and accuracy of test strips with advanced digital technology. You will no longer have to guess the exact results of test strips. Just wet a test strip in your pool or spa water, put it in the reader and you will obtain fast, accurate results.

| Code | Standard Pack | Standard Weight in kg | Standard Volume in m³ |
|---|---|---|---|
| **38813** | - | - | - |




### TruTest kit

Comes with:
- 1 display rack and banner for your point of sale.
- 6 digital test strip readers.
- 6 packs of TruTest digital test strips.

| Code | Standard Pack | Standard Weight in kg | Standard Volume in m³ |
|---|---|---|---|
| **41653** | - | - | - |

## POCKET GAUGES



### Dissolved solids pocket gauge

A small, practical pocket gauge for quickly measuring the solids dissolved in the water.

| Code | Standard Pack | Standard Weight in kg | Standard Volume in $m^3$ |
|---|---|---|---|
| **41928** | 1 | - | - |



### Redox pocket gauge

A small, practical pocket gauge for quickly measuring the redox level in pool water.

| Code | Standard Pack | Standard Weight in kg | Standard Volume in $m^3$ |
|---|---|---|---|
| **28583** | 1 | - | - |



### pH pocket gauge

A small, practical pocket gauge for quickly measuring the pH level in pool water.

| Code | Standard Pack | Standard Weight in kg | Standard Volume in $m^3$ |
|---|---|---|---|
| **43447** | 1 | - | - |



### Conductivity pocket gauge

A small, practical pocket gauge for quickly measuring conductivity.

| | Code | Standard Pack | Standard Weight in kg | Standard Volume in $m^3$ |
|---|---|---|---|---|
| Range: 0.1–19.9 mS/cm. | **43428** | 1 | - | - |

## TEST KITS AND PHOTOMETERS



### 3-in-1 photometer

Chlorine: 0.01–5.0 mg/l
Isocyanuric acid 2–200 mg/l
pH: 6.8 - 8.4

| Code | Standard Pack | Standard Weight in kg | Standard Volume in $m^3$ |
|---|---|---|---|
| **47189** | 1 | 1.0 | 0.049 |

## TEST KITS AND PHOTOMETERS



### 6-in-1 photometer

Chlorine range: 0.01–5.0 mg/l
ph range: 6.8–8.4
Isocyanuric acid 2–200 mg/l
Calcium hardness: 5–500 mg/l
Bromine: 0.01–5.0 mg/l
Alkalinity: 10–500 mg/l

| Code | Standard Pack | Standard Weight in kg | Standard Volume in $m^3$ |
|---|---|---|---|
| **47190** | 1 | 1.0 | 0.049 |



### 3-in-1 photometer PC test kit

Chlorine range: 0.05–6.0 mg/l
ph range: 6.5–8.4
Cyanuric acid range: 0–80.0 mg/l

| Code | Standard Pack | Standard Weight in kg | Standard Volume in $m^3$ |
|---|---|---|---|
| **54567** | 1 | 1.0 | 0.049 |



### Pool-Control-Direct

Multiparameter photometer that enables a wide range of tests to be performed that cover all pool water readings. Intended for pool dealers.

| | Code | Standard Pack | Standard Weight in kg | Standard Volume in $m^3$ |
|---|---|---|---|---|
| Pool-Control-Direct | **41922** | 1 | 1.9 | 0.023 |

Parameters tested (the reagents required can be ordered):

Alkalinity: 10 – 500 mg/l
Aluminium: 0.02–0.5 mg/l
Ammonia: 0.01–1.0 mg/l
Cyanuric acid: 2–200 mg/l
Biguanide: 2–100 mg/l
Bromine: 0.04–10.0 mg/l
Calcium hardness: 5–500 mg/l
Chloride: 10–500 mg/l
Free chlorine: 0.01–5.0 mg/l
Total chlorine: 0.01–5.0 mg/l
Free chlorine released: 0.01–10 mg/l
Total chlorine released: 0.01–10 mg/l
Chlorine range: 1–250 mg/l
Total copper 0.03–5.0 mg/l
Free copper: 0.03–5.0 mg/l
Total hardness: 5–500 mg/l
Phosphates: 0.03–4.0 mg/l
Iron: 0.01–1.0 mg/l
Manganese: 0.001–0.03 mg/l
Nitrates: 0.02–20 mg/l
Ozone: 0.01–2.0 mg/l
Hydrogen peroxide: 1–100 mg/l
pH: 6,8 – 8,4
Salt level: 0–10.000 mg/l
Sulphates: 5–200 mg/l



### 5-in-1 photometer PC test kit

Chlorine range: 0.05–6.0 mg/l
ph range: 6.5–8.4
Cyanuric acid range: 0–80.0 mg/l
Alkalinity range: 5–200 mg/l
Calcium hardness range: 50–500 mg/l

| Code | Standard Pack | Standard Weight in kg | Standard Volume in $m^3$ |
|---|---|---|---|
| **54568** | 1 | 1.0 | 0.049 |

## TEST KITS AND PHOTOMETERS

### Photometer reagents



Code 03009

| | | Code | Standard Pack | Standard Weight in kg | Standard Volume in $m^3$ |
|---|---|---|---|---|---|
| Phenol reagent tablets (pH) | 250 units | **03019** | 1 | 0.1 | 0.004 |
| DPD-1 reagent tablets | 250 units | **03009** | 1 | 0.1 | 0.004 |
| DPD-3 reagent tablets | 250 units | **03014** | 1 | 0.1 | 0.004 |
| MPS-OUT reagent tablets (test for the amount of chlorine in the presence of Oximines) | 250 units | **08679** | 1 | 0.1 | 0.004 |
| Isocyanuric acid reagent tablets | 250 units | **08345** | 1 | 0.1 | 0.004 |
| Other reagents | | **Consult** | | | |



# WATER TREATMENT EQUIPMENT


192 • Swimming pool water treatment solutions
193 • Salt water electrolysis - Residential pools
198 • Automatic UV disinfection - Residential pools
202 • pH & Chlorine automatic regulations - Residential pools
206 • Dosing pumps
209 • Dosing equipment
212 • Water meters & Control devices

## SWIMMING POOL WATER TREATMENT SOLUTIONS

**Disinfection management and pH management represent 20% of pool water treatment but 80% of daily in-store enquiries. Correctly managing disinfection and pH is then key to the perfect pool experience. The AstralPool® product range offers 4 product families to relieve the pool owners from constraints.**

### How to chose the most adapted water treatment solution?

Our water treatment product portfolio allows pool owners to adapt their equipment to their needs, from lowering maintenance constraints to increasing bathing comfort, connectivity or environmentally friendly solutions. The chart below will help you chose the best option for your pool.

Range ramp up






| | | Dosing | UV | Salt Water Electrolysis | Neolysis |
|---|---|---|---|---|---|
| **Type of disinfection** | | Liquid chlorine | UV & disinfectant | Salt | UV & Salt |
| **pH regulation*** | | ✓ | - | ✓ | ✓ |
| **Disinfection regulation** | | ✓ | ✓ | ✓ | ✓ |
| **Automated dosing / disinfecting** | | ✓ | ✓ | ✓ | ✓ |
| **Remote access to the device (through app/website)*** Fluidra Connect compatible | | ✓ | - | ✓ | ✓ |
| **Reduced maintenance constraints** | | ✓ | ✓✓ | ✓✓✓ | ✓✓✓ |
| **Reduced use/handling of chemicals** | | ✓ | ✓✓ | ✓✓✓ | ✓✓✓ |
| **Gentle and healthy treatment** | | ✓ | ✓✓ | ✓✓ | ✓✓✓ |
| **Investment** | **At installation** | € - €€€ | €€ - €€€ | €€ - €€€€ | €€€ - €€€€ |
| | **Seasonal cost** | €€€ | €€ | €€ | €€ |

* When ✓ : depending on model.

## SALT WATER ELECTROLYSIS - RESIDENTIAL POOLS

### Model comparison










| Product name | Elite Connect | | | | Smart Next | | | | | Energy Sel | | | Bering Sel |
|---|---|---|---|---|---|---|---|---|---|---|---|---|---|
| Chlorine output (g/h) | 12 | 24 | 32 | 42 | 7 | 12 | 21 | 30 | 40 | 9 | 13 | 19 | 8 |
| Pool volume - temperate climate, filtration 8 h/day ($m^3$) | 60 | 100 | 160 | 200 | 30 | 60 | 80 | 140 | 180 | 30 | 55 | 95 | 55 |
| Salinity (g/L) | Standard Mini: 5 - Ideal: 6<br>Low Salt Mini: 1 - Ideal: 2 | | | | Mini: 5 - Ideal: 6 | | | | | Mini: 3,5 - Ideal: 4 | | | Mini: 3,2 - Ideal: 4 |
| Output control | 0-100% | | | | 0-100% (10 levels) | | | | | 0-100% | | | 0-100% |
| User interface | 2,8" TFT colour touchscreen | | | | Back-lit touchscreen | | | | | 2 digits LCD screen | | | LED |
| Minimum flow rate ($m^3$/h) | 2 | 4 | 6 | 8 | 2 | 3 | 5 | 6 | 8 | 2 | 3 | 4 | 3 |
| Electric power (W) | 83 | 165 | 205 | 205 | 46 | 92 | 92 | 184 | 207 | 70 | | | 100 |
| Protection rating | IP65 | | | | IP65 | | | | | IP45 | | | IP24 |
| Type of cell | Horizontal or vertical | | | | Horizontal or vertical | | | | | Horizontal or vertical | | | Horizontal or vertical |
| Cell service life | 12,000 h | | | | 10,000 h | | | | | 8,000 h | | | 8,000 h |
| Polarity reversal | ✓ - 2-3-4 h | | | | ✓ - 2-3 h | | | | | ✓ - 0-99 h | | | ✓ |
| Cover mode | ✓ | | | | ✓ | | | | | ✓ | | | - |
| Lack of water: | | | | | | | | | | | | | |
| Gas sensor | ✓ | | | | ✓ | | | | | - | | | ✓ |
| Flow Switch | ✓ | | | | Optional | | | | | Optional | | | - |
| Salt fail-safe mode (High - Low) | ✓ | | | | ✓ | | | | | - | | | - |
| Running time counter | ✓ | | | | ✓ | | | | | - | | | - |
| Temperature display | ✓ | | | | ✓ | | | | | - | | | - |
| Salinity display | ✓ | | | | ✓ | | | | | - | | | - |
| Connectivity: | | | | | | | | | | | | | |
| NN-compatible | ✓ | | | | ✓ | | | | | - | | | - |
| PoolStation included | ✓ | | | | - | | | | | - | | | - |
| External output control | ✓ | | | | ✓ | | | | | - | | | - |
| pH control | ✓ - Scalable | | | | ✓ - Optional | | | | | - | | | - |
| Sensor holder included | ✓ | | | | ✓ | | | | | - | | | - |
| pH pump included | ✓ | | | | ✓ | | | | | - | | | - |
| ORP control (scalable) | ✓ | | | | - | | | | | - | | | - |
| ppm control (scalable) | ✓ | | | | - | | | | | - | | | - |
| Low Salt version | ✓ | | | | - | | | | | - | | | - |
| Timer | ✓ | | | | - | | | | | - | | | - |
| Inputs - Outputs | 4 (digital) - 4 (relays) | | | | - | | | | | - | | | - |
| Warranty | 3 years | | | | 2 years | | | | | 2 years | | | 2 years |

+ info
PDB
Further information on **PRODUCTS**
www.astralpool.com

# SALT WATER ELECTROLYSIS - RESIDENTIAL POOLS



## Elite Connect

BEST IN CLASS · PROFESSIONAL ADVICE RECOMMENDED · New

A fully automated pH and chlorine control unit with all of the added advantages of salt water chlorination.

- Connected product using built-in Ethernet port and PoolStation app (available on iOS & aOS).
- NN compatible: Smart control within Fluidra Connect pool automation and NN app (available on iOS & aOS).
- Scalable control functions with S-Driver® plug-in modules (pH, Rx and Cl ppm).
- 2.8'' TFT colour touchscreen.
- Compatible with Fluidra Connect and integrated PoolStation.
- It has 4 digital inputs and 4 digital outputs (relay) to control the filter pump, heat pump, lighting, watering system, etc.
- Equipped with a gas sensor, a flow switch and a compact sensor holder (pH option) as standard.
- Equipped with high quality electrodes, with a service life of up to 12,000 hours under normal conditions.
- Output control from 0 to 100%.
- pH dosing pump included with pH option.
- Low-salt version (1–4 g/l).
- **New for 2020:** VSP driver that can control 3-speed variable speed pumps and backwash piston valves.

COMPATIBLE NN thing
*Fluidra Connect compatible*

PoolStation
Embedded System

Modbus







**Possibility of upgrading the unit with S-Driver®**

| | Code | Standard Pack | Standard Weight in kg | Standard Volume in m³ |
|---|---|---|---|---|
| **Elite Connect** | | | | |
| Elite Connect 12 g/h | **70012** | 1 | - | - |
| Elite Connect 24 g/h | **70013** | 1 | - | - |
| Elite Connect 32 g/h | **70014** | 1 | - | - |
| Elite Connect 42 g/h | **70016** | 1 | - | - |
| **Elite Connect pH** | | | | |
| Elite Connect pH 12 g/h | **70019** | 1 | - | - |
| Elite Connect pH 24 g/h | **70021** | 1 | - | - |
| Elite Connect pH 32 g/h | **70023** | 1 | - | - |
| Elite Connect pH 42 g/h | **70025** | 1 | - | - |
| **Elite Connect pH/Rx** | | | | |
| Elite Connect pH/Rx 12 g/h | **70031** | 1 | - | - |
| Elite Connect pH/Rx 24 g/h | **70032** | 1 | - | - |
| Elite Connect pH/Rx 32 g/h | **70033** | 1 | - | - |
| Elite Connect pH/Rx 42 g/h | **70035** | 1 | - | - |
| **Elite Connect pH/ppm** | | | | |
| Elite Connect pH/ppm 12 g/h | **70361** | 1 | - | - |
| Elite Connect pH/ppm 24 g/h | **70363** | 1 | - | - |
| Elite Connect pH/ppm 32 g/h | **70365** | 1 | - | - |
| Elite Connect pH/ppm 42 g/h | **70369** | 1 | - | - |
| **Elite Connect LS** | | | | |
| Elite Connect LS 12 g/h | **70037** | 1 | - | - |
| Elite Connect LS 24 g/h | **70039** | 1 | - | - |
| Elite Connect LS pH 12 g/h | **70040** | 1 | - | - |
| Elite Connect LS pH 24 g/h | **70042** | 1 | - | - |
| Elite Connect LS pH/Rx 12 g/h | **70047** | 1 | - | - |
| Elite Connect LS pH/Rx 24 g/h | **70048** | 1 | - | - |
| Elite Connect LS pH/ppm 12 g/h | **70371** | 1 | - | - |
| Elite Connect LS pH/ppm 24 g/h | **70372** | 1 | - | - |
| **Driver** | | | | |
| SD-pH | **70049** | 1 | - | - |
| SD-Pump (pH) | **70054** | 1 | - | - |
| SD-ORP | **70051** | 1 | - | - |
| SD-PPM | **70052** | 1 | - | - |
| SD-VSP | **72883** | 1 | - | - |



**70049**



**70054**



**70051**



**70052**

## SALT WATER ELECTROLYSIS - RESIDENTIAL POOLS



### Smart Next

A salt water chlorinator with optional ph automated control.

- Compatible with Fluidra Connect.
- Equipped with a gas sensor (optional flow switch) and compact sensor holder (pH option) as standard.
- Monitors temperature and salinity.
- Equipped with high quality electrodes, with a service life of up to 10,000 hours under normal conditions.
- Output control from 0 to 100%.
- pH dosing pump included with pH option.

*Fluidra Connect compatible*

| | Code | Standard Pack | Standard Weight in kg | Standard Volume in m³ |
|---|---|---|---|---|
| **Smart Next** | | | | |
| Smart Next 7 g/h | **70058** | 1 | - | - |
| Smart Next 12 g/h | **70060** | 1 | - | - |
| Smart Next 21 g/h | **70062** | 1 | - | - |
| Smart Next 30 g/h | **70063** | 1 | - | - |
| Smart Next 40 g/h | **70064** | 1 | - | - |
| **Smart Next pH** | | | | |
| Smart Next pH 7 g/h | **70083** | 1 | - | - |
| Smart Next pH 12 g/h | **70084** | 1 | - | - |
| Smart Next pH 21 g/h | **70085** | 1 | - | - |
| Smart Next pH 30 g/h | **70086** | 1 | - | - |
| Smart Next pH 40 g/h | **70093** | 1 | - | - |
| **Option:** | | | | |
| Flow switch, D.50 collar and adaptor | **71124** | 1 | - | - |



### Energy Sel

Self-cleaning salt water chlorinator thanks to polarity reversal. New flat screen design. Easy to install and use. On / off push button located in the lower part to avoid involuntary disconnections. It is recommended for pools up to 95 m³. Relay for automatic cover. Optional flow switch (code 300227 includes D.63 collar; code 300228 includes D.50 collar).

| | Chlorine output | Code | Standard Pack | Standard Weight in kg | Standard Volume in m³ |
|---|---|---|---|---|---|
| Up to 30 m³ | 9 g/h | **71650** | 1 | 3.50 | 0.025 |
| Up to 55 m³ | 13 g/h | **71651** | 1 | 3.65 | 0.025 |
| Up to 95 m³ | 19 g/h | **71652** | 1 | 3.70 | 0.025 |




### Bering Sel

Self-cleaning salt water chlorinator thanks to polarity reversal. For pools between 30 and 55 m³. Compact design. Manual output adjustment (from 0 to 100%).
3 indicators: solid green = running, solid red = in standby mode, flashing red = failure (lack of water, lack of salt).

| | Code | Standard Pack | Standard Weight in kg | Standard Volume in m³ |
|---|---|---|---|---|
| From 30 to 55 m³ | **64315** | 1 | 6.0 | |

+ info
PDB
Further information on **PRODUCTS**
www.astralpool.com

# SALT WATER ELECTROLYSIS - RESIDENTIAL POOLS



## Sel Clear

Self-cleaning salt water chlorinator thanks to polarity reversal. Easy to install and use. It is recommended for pools up to 95 m³. Relay for automatic cover. Optional flow switch (code 300227 includes D.63 collar; code 300228 includes D.50 collar).

| | Chlorine output | Code | Standard Pack | Standard Weight in kg | Standard Volume in m³ |
|---|---|---|---|---|---|
| Up to 30 m³ | 9 g/h | **54041** | 1 | 3.50 | 0.025 |
| Up to 55 m³ | 13 g/h | **54042** | 1 | 3.65 | 0.025 |
| Up to 95 m³ | 19 g/h | **54043** | 1 | 3.70 | 0.025 |



## Salt test kit

Salt test strips for checking salt levels. Salt levels must be checked on a regular basis as the water is renewed.

| Code | Standard Pack | Standard Weight in kg | Standard Volume in m³ |
|---|---|---|---|
| **07937** | 1 | 0.8 | 0.001 |



## Earthing anode

Easy-to-install stainless steel earthing anode to remove roaming curents that might be present with salt water. Provided with saddle clamp kit.

| | Code | Standard Pack | Standard Weight in kg | Standard Volume in m³ |
|---|---|---|---|---|
| For Ø 50 mm | **25894** | 1 | 0.6 | 0.001 |
| For Ø 63 mm | **25895** | 1 | 0.6 | 0.001 |



## Standard Elite Connect electrodes

| | Code | Standard Pack | Standard Weight in kg | Standard Volume in m³ |
|---|---|---|---|---|
| Elite Connect 12 electrode (Codes 70012 / 70019 / 70031 / 70361) | **60588** | 1 | - | - |
| Elite Connect 24 electrode (Codes 70013 / 70021 / 70032 / 70363) | **60589** | 1 | - | - |
| Elite Connect 32 electrode (Codes 70014 / 70023 / 70033 / 70365) | **60594** | 1 | - | - |
| Elite Connect 42 electrode (Codes 70016 / 70025 / 70035 / 70369) | **70316** | 1 | - | - |
| Elite Connect 12 LS electrode (Codes 70037 / 70040 / 70047 / 70371) | **70317** | 1 | - | - |
| Elite Connect 24 LS electrode (Codes 70039 / 70042 / 70048 / 70372) | **70318** | 1 | - | - |

## SALT WATER ELECTROLYSIS - RESIDENTIAL POOLS



### Standard Smart Next electrodes

| | Code | Standard Pack | Standard Weight in kg | Standard Volume in m³ |
|---|---|---|---|---|
| Smart Next 07 electrode (Codes 70058 / 70083) | **60595** | 1 | - | - |
| Smart Next 12 electrode (Codes 70060 / 70084) | **60596** | 1 | - | - |
| Smart Next 21 electrode (Codes 70062 / 70085) | **70312** | 1 | - | - |
| Smart Next 30 electrode (Codes 70063 / 70086) | **70314** | 1 | - | - |
| Smart Next 40 electrode (Codes 70064 / 70093) | **70315** | 1 | - | - |



### Energy Sel / Sel Clear electrodes

| | Code | Standard Pack | Standard Weight in kg | Standard Volume in m³ |
|---|---|---|---|---|
| Electrode 30: up to 30 m³ | **54051** | 1 | 0.35 | 0.0055 |
| Electrode 55: up to 55 m³ | **54052** | 1 | 0.44 | 0.0055 |
| Electrode 95: up to 95 m³ | **54053** | 1 | 0.50 | 0.0055 |



### Bering Sel electrode

New

| | Code | Standard Pack | Standard Weight in kg | Standard Volume in m³ |
|---|---|---|---|---|
| Electrode: up to 75 m³ | **72889** | 1 | 0.5 | 0.0070 |

+ info
PDB
Further information on **PRODUCTS**
**www.astralpool.com**

# AUTOMATIC UV DISINFECTION - RESIDENTIAL POOLS

**Neolysis**, the most advanced water treatment by AstralPool: + Sustainability + Innovation + Disinfection + Healthy.

**Advantages:**
- Water suitable for watering.
- Dual disinfection based on UV and electrolysis.
- Unbeatable water quality.

**Characteristics:**
- The ultimate in chloramine reduction capacity (UV LP + Electrolysis).
- UV LP HO lamps (13,000 h).
- Patented process.





COMPATIBLE NN thing
*Fluidra Connect compatible*

## Neolysis S (6 g/L)

Standard salinity (S) salt water chlorination systems combined with UV lamps for use in private pool up to 120 m³. Operation with standard salinity (4–6 grams per litre).

| | Code | Standard Pack | Standard Weight in kg | Standard Volume in m³ |
|---|---|---|---|---|
| AP NEO/S (6 Gr/l) 12 Gr/h + UV 48 W | **66126** | 1 | - | - |
| AP NEO/S (6 Gr/l) 24 Gr/h + UV 56 W | **66127** | 1 | - | - |
| AP NEO/S (6 Gr/l) 32 Gr/h + UV 56 W | **66128** | 1 | - | - |
| AP NEO/S (6 Gr/l) 12 Gr/h + UV 48 W + pH | **66129** | 1 | - | - |
| AP NEO/S (6 Gr/l) 24 Gr/h + UV 56 W + pH | **66130** | 1 | - | - |
| AP NEO/S (6 Gr/l) 32 Gr/h + UV 56 W + pH | **66138** | 1 | - | - |
| AP NEO/S (6 Gr/l) 12 Gr/h + UV 48 W + pH/ORP | **66139** | 1 | - | - |
| AP NEO/S (6 Gr/l) 24 Gr/h + UV 56 W + pH/ORP | **66140** | 1 | - | - |
| AP NEO/S (6 Gr/l) 32 Gr/h + UV 56 W + pH/ORP | **66141** | 1 | - | - |
| Optional: | | | | |
| Compatible Fluidra Connect kit | **60363** | 1 | - | - |





COMPATIBLE NN thing
*Fluidra Connect compatible*

## Neolysis LS (1.5 - 3.0 g/L)

No need to add any extra salt. Natural conductivity in the operating range of 1.5–3 g/l depending on the temperature (28–35 ºC) and nominal output (80–100%).

| | Code | Standard Pack | Standard Weight in kg | Standard Volume in m³ |
|---|---|---|---|---|
| AP NEO 12 Gr/h + UV 48 W | **57744** | 1 | - | - |
| AP NEO 24 Gr/h + UV 56 W | **57745** | 1 | - | - |
| AP NEO 32 Gr/h + UV 56 W | **57746** | 1 | - | - |
| AP NEO 12 Gr/h + UV 48 W + pH | **57747** | 1 | - | - |
| AP NEO 24 Gr/h + UV 56 W + pH | **57748** | 1 | - | - |
| AP NEO 32 Gr/h + UV 56 W + pH | **57749** | 1 | - | - |
| AP NEO 12 Gr/h + UV 48 W + pH/ORP | **57750** | 1 | - | - |
| AP NEO 24 Gr/h + UV 56 W + pH/ORP | **57751** | 1 | - | - |
| AP NEO 32 Gr/h + UV 56 W + pH/ORP | **57752** | 1 | - | - |
| Optional: | | | | |
| Compatible Fluidra Connect kit (without lamp control) | **60363** | 1 | - | - |

## Lamps for the Neolysis system in private pools



| | Code | Standard Pack | Standard Weight in kg | Standard Volume in m³ |
|---|---|---|---|---|
| 48-W UV LP-10 lamps (Codes 57744, 57747, 57750, 66126, 66129, 66139) | **60559** | 1 | 0.10 | - |
| 56-W UV LP-14 lamps (Codes 57745, 57746, 57748, 57749, 57751, 57752, 66127, 66128, 66130, 66138, 66140 and 66141) | **60606** | 1 | 0.11 | - |
| UV LP-10/14 quartz | **60607** | 1 | 0.08 | - |

# AUTOMATIC UV DISINFECTION - RESIDENTIAL POOLS



## Neolysis electrodes for private pools

| | Code | Standard Pack | Standard Weight in kg | Standard Volume in m³ |
|---|---|---|---|---|
| 12 gr/h Neolysis electrode (Codes 57744, 57747, 57750) | **61116** | 1 | - | - |
| 24 gr/h Neolysis electrode (Codes 57745, 57748, 57751) | **61117** | 1 | - | - |
| 32 gr/h Neolysis electrode (Codes 57746, 57749, 57752) | **61118** | 1 | - | - |
| 12 gr/h Neolysis-S (6 gr/l) electrode (Codes 66126, 66129, 66139) | **67807** | 1 | - | - |
| 24 gr/h Neolysis-S (6 gr/l) electrode (Codes 66127, 66130, 66140) | **67808** | 1 | - | - |
| 32 gr/h Neolysis-S (6 gr/l) electrode (Codes 66128, 66138, 66141) | **67809** | 1 | - | - |

UV LP S.S. and UV LP PE (LP = low pressure) systems are designed to be used in residential pools. They work on a wavelength of 254 nm, which is ideal for removing microorganisms. They will enable you to benefit from the latest ultraviolet light technology in the field of water treatment.

**Features of LP S.S. & LP PE:**

- Stainless steel and polyethylene versions.
- Double lamp version (LP30 and LP30+).
- Plastic injection power box.
- Fluidra technology (design and manufacturing).
- Lamp "ON" indicator.
- Electronic counter for working time and ignitions (lamp lifetime control).
- Flow switch (optional, included in LP+ versions).
- LP+ versions come with a built-in pH/ORP controller (complete package).
- LP+ versions come with a flow switch, pH/ORP sensors and sensor holder (dosing pumps not included).



## Heliox UV LP S.S. for residential pools

| | Code | Standard Pack | Standard Weight in kg | Standard Volume in m³ |
|---|---|---|---|---|
| Heliox UV LP 10 | **52206** | 1 | - | - |
| Heliox UV LP 14 | **52207** | 1 | - | - |
| Heliox UV LP 25 | **52208** | 1 | - | - |
| Heliox UV LP 30 | **52209** | 1 | - | - |
| **Version with pH/ORP Control (LP+):** | | | | |
| Heliox UV LP 10 + | **52210** | 1 | - | - |
| Heliox UV LP 14 + | **52211** | 1 | - | - |
| Heliox UV LP 25 + | **52212** | 1 | - | - |
| Heliox UV LP 30 + | **52213** | 1 | - | - |



## Heliox UV LP PE for residential pools

| | Code | Standard Pack | Standard Weight in kg | Standard Volume in m³ |
|---|---|---|---|---|
| Heliox UV LP P10 | **52214** | 1 | - | - |
| Heliox UV LP P14 | **52215** | 1 | - | - |
| Heliox UV LP P20 | **52216** | 1 | - | - |
| Heliox UV LP P25 | **52217** | 1 | - | - |
| **Version with pH/ORP Control (LP+):** | | | | |
| Heliox UV LP P10 + | **52218** | 1 | - | - |
| Heliox UV LP P14 + | **52219** | 1 | - | - |
| Heliox UV LP P20 + | **52220** | 1 | - | - |
| Heliox UV LP P25 + | **52221** | 1 | - | - |

+ info
PDB
Further information on **PRODUCTS**
www.astralpool.com

## AUTOMATIC UV DISINFECTION - RESIDENTIAL POOLS

| Material | Code | Model | Code | Model | Flow rate (30 mJ/cm²) | Nº lamps | Rated / UV-C power | Total height (mm) | Ø reactor |
|---|---|---|---|---|---|---|---|---|---|
| **Stainless steel** | **52206** | UV LP 10 | **52210** | UV LP 10+ | 10 m³/h | 1 | 48 / 13 W | 790 | 204 |
| **Stainless steel** | **52207** | UV LP 14 | **52211** | UV LP 14+ | 14 m³/h | 1 | 56 / 18 W | 790 | 204 |
| **Stainless steel** | **52208** | UV LP 25 | **52212** | UV LP 25+ | 25 m³/h | 1 | 90 / 30 W | 1033 | 204 |
| **Stainless steel** | **52209** | UV LP 30 | **52213** | UV LP 30+ | 30 m³/h | 2 | 2 x 75 / 2 x 25 W | 1033 | 204 |
| **PE** | **52214** | UV LP P10 | **52218** | UV LP P10+ | 10 m³/h | 1 | 48 / 13 W | 735 | 200 |
| **PE** | **52215** | UV LP P14 | **52219** | UV LP P14+ | 14 m³/h | 1 | 56 / 18 W | 735 | 200 |
| **PE** | **52216** | UV LP P20 | **52220** | UV LP P20+ | 20 m³/h | 1 | 75 / 25 W | 978 | 200 |
| **PE** | **52217** | UV LP P25 | **52221** | UV LP P25+ | 25 m³/h | 1 | 90 / 30 W | 978 | 200 |

### Heliox UV LP lamps



| | Code | Standard Pack | Standard Weight in kg | Standard Volume in m³ |
|---|---|---|---|---|
| 48-W UV LP-10 lamps (Codes 52206, 52210, 52214, 52218) | **60559** | 1 | 0.100 | - |
| 56-W UV LP-14 lamps (Codes 52207, 52211, 52215, 52219) | **60606** | 1 | 0.115 | - |
| 75-W UV LP-20 lamp (Codes 52216, 52220) | **60608** | 1 | 0.200 | - |
| 90-W UV LP-25 lamp (Codes 52208, 52212, 52217, 52221) | **60609** | 1 | 0.120 | - |
| Kit of 2 x 75-W UV LP replacement lamps (Codes 52209, 52213) | **60637** | 1 | 0.240 | - |
| UV LP-10/14 quartz (lamps 48 W and 56 W) | **60607** | 1 | 0.080 | - |
| UV LP-20/25/30 quartz (lamps 75 W and 90 W) | **60631** | 1 | 0.090 | - |

### UV-C TL



The Astral UV-C TL ensures that your pool water is kept clean, fresh and crystal clear at all times in the most efficient, environmentally friendly way possible. Easy to install and maintain. It has a built-in electronic ballast for running the power pack without problems. In addition, the stainless steel reactor reflects UV-C rays, thus increasing efficiency by as much as 35%. The 30- and 50-watt versions have a single lamp, whilst the 110-watt version has two 55-watt lamps in dual housing to increase contact time. Max. pressure: 2 bar. Comes with 3 connections (one closed with a blind cover) for easy installation. Also includes adaptors from Ø 63 mm to Ø 50 mm, with 1½ " female thread.
The reactor must be wired to earth.

| | Code | Standard Pack | Standard Weight in kg | Standard Volume in m³ |
|---|---|---|---|---|
| Astral UVC-30W TL | **71427** | 1 | - | - |
| Astral UVC-55W TL | **71428** | 1 | - | - |
| Astral UVC-110W TL | **71429** | 1 | - | - |

| Code | Flow rate of 30 mJ/cm² | Max. flow rate m³/h | Watt | Connection | Reactor material | Lamp service life |
|---|---|---|---|---|---|---|
| **71427** | 8 m³/h | 23 | 30 | 63/50/1.5" | 316L | 9000 h |
| **71428** | 13 m³/h | 23 | 55 | 63/50/1.5" | 316L | 9000 h |
| **71429** | 20 m³/h | 23 | 110 (2 x 55) | 63/50/1.5" | 316L | 9000 h |

# AUTOMATIC UV DISINFECTION - RESIDENTIAL POOLS



## UV-C PE

AstralPool has launched a new high quality UV-C PE in 30 and 50 watts. The unit has a reactor that is big in diameter to increase exposure time to UV-C radiation. You pool water will be disinfected efficiently and safely. The units have rubber side caps that are splash-proof so that the lamp can be changed quickly. The unit can also be assembled in the opposite direction. It is therefore possible to choose the position of the input and output (left and right). The UV-C unit has a full PE reactor, which makes the device perfectly suited for pools with a salt chlorinator or salt water. The input has two 1½ " female threaded connections. The rest of the opening will be used for the transparent plug supplied as the lamp's indicator. The UV-C unit comes with 25/32/40 mm hoses. The reactor must be wired to earth.

| | Code | Standard Pack | Standard Weight in kg | Standard Volume in $m^3$ |
|---|---|---|---|---|
| Astral UV-C PE 30W | **71398** | 1 | - | - |
| Astral UV-C PE 55W | **71399** | 1 | - | - |

| Code | Flow rate of 30 $mJ/cm^2$ | Max. flow rate $m^3/h$ | Watt | Connection | Reactor material | Lamp service life |
|---|---|---|---|---|---|---|
| **71398** | 13.5 $m^3/h$ | 20 | 30 | 1 ½" fem. Thr. | PE | 9000 h |
| **71399** | 18 $m^3/h$ | 20 | 55 | 1 ½" fem. Thr. | PE | 9000 h |



## UV-C

All the UVC equipment is made using the latest technological design to ensure effective water flow through the unit, driving better UV light performance. Designed to bear pressures up to 4 bars. Power consumption is low, the whole of the electrical system is protected so that water can't enter and there is a thermal element to prevent power surges. The UVC units are distributed with two male threads of 1.5" / 50mm. The product is easy to install. Each unit is distributed with stainless steel anchoring fixtures for vertical or horizontal fastening.

| Code | Standard Pack | Standard Weight in kg | Standard Volume in $m^3$ |
|---|---|---|---|
| **UVC-15AN** | 1 | - | - |
| **UVC-25AN** | 1 | - | - |
| **UVC-30AN** | 1 | - | - |
| **UVC-55AN** | 1 | - | - |
| **UVC-75AN** | 1 | - | - |

| Code | Q flow rate ($m^3/h$) | Dose $mJ/cm^2$) | Maximum volume ($m^3$) | Light power (W) | Connections |
|---|---|---|---|---|---|
| **UVC-15AN** | 1.70-7.50 | 30.0-6.8 | 15 | 75 | 1.5" / 50 mm |
| **UVC-25AN** | 1.81-10.00 | 30.0-5.4 | 25 | 25 | 1.5" / 50 mm |
| **UVC-30AN** | 3.81-15.00 | 30.0-7.6 | 30 | 30 | 1.5" / 50 mm |
| **UVC-55AN** | 7.63-20.00 | 30.0-11.4 | 55 | 55 | 1.5" / 50 mm |
| **UVC-75AN** | 9.17-25.00 | 30.0-11.0 | 75 | 75 | 1.5" / 50 mm |

+ info
Further information on **PRODUCTS**
www.astralpool.com

# PH & CHLORINE AUTOMATIC REGULATIONS - RESIDENTIAL POOLS



## Control Connect

New

A fully automated multi-parameters control unit for a balanced and disinfected swimming pool.

A range of models suitables to different needs with either pH & ORP automatic regulations and dosing or pH & PPM free chlorine automatic regulations.

- Connected product using built-in Ethernet port and PoolStation app (available on iOS & aOS).
- NN compatible: Smart control within Fluidra Connect pool automation and NN app (available on iOS & aOS).
- Available in stand-alone version (code 71537) or in a complete panel version with low flow sensor chamber (codes 71538 & 71539).
- 2.8'' TFT colour touchscreen.
- 4 digital inputs and 4 digital outputs (relays) to control the filter pump, heat pump, lighting, refill system, etc.
- Water temperature reading as standard.
- Equipped with a flow switch as standard.
- Equipped with dedicated outputs for pH & chlorine dosing pumps.
- pH and chlorine dosing pumps NOT included.

*Fluidra Connect compatible*

PoolStation
Embedded System

Modbus







**71537**

**pH/ORP/Temp. stand-alone**



**71538**

**pH/ORP/Temp. complete panel**



**71539**

**pH/PPM/Temp. complete panel**

| | Code | Standard Pack | Standard Weight in kg | Standard Volume in $m^3$ |
|---|---|---|---|---|
| pH / ORP / Temp. stand-alone | **71537** | 1 | 5.85 | - |
| pH / ORP / Temp. complete panel | **71538** | 1 | 6.85 | - |
| pH / PPM / Temp. complete panel | **71539** | 1 | 6.85 | - |

Check sensors and installation kit on page 206

# PH & CHLORINE AUTOMATIC REGULATIONS - RESIDENTIAL POOLS



## Control Basic Plus

Small in size, it has been designed to prevent siphoning, require little maintenance, be easy to install and is protected from the spraying of chemical products. The device automatically measures and checks a pool's pH or redox.

**Supplied without sensors or calibration solutions. Installation kit included.**

- Plastic housing with IP-65 protection rating
- Backlit LCD display comprising 2 lines and 16 characters.
- Self-calibration of sensors.
- Quality control of sensors.
- Dosing pause during alarms and notification by a blinking LED.
- Proportional dosing.
- Adjustable set point.
- Flow rate: 1,5 l/h or 5 l/h.
- Back pressure: 1.5 bar.
- pH measurement range: 0.00 to 14.00.
- Redox measurement range: -999 to + 999 mV.
- Switch.
- Alarm relay.
- Minimum chemical product level input.
- PT100 temperature inlet (optional sensor).

*Fluidra Connect compatible*

See the sensors and the installation kit on page 205

| | Code | Standard Pack | Standard Weight in kg | Standard Volume in m³ |
|---|---|---|---|---|
| Control Basic 1,5 l/h | **66159** | 1 | 2.2 | 0.01 |
| Control Basic 5,0 l/h | **66160** | 1 | 2.2 | 0.01 |
| pH sensor with calibration solutions | **36004** | 1 | 0.4 | 0.001 |
| Redox sensor with calibration solutions | **36005** | 1 | 0.3 | 0.001 |
| Optional | | | | |
| PT100 sensor | **66758** | - | - | - |
| Flange for PT100 | **66759** | - | - | - |



## Redox Basic EV Plus

Small in size, it has been designed to prevent siphoning, require little maintenance, be easy to install and is protected from the spraying of chemical products. Recommended for use with chlorinators without redox control, such as Sel Pure, Dual Pure, Smart and Smart + pH.

**Supplied without sensors or calibration solutions. Installation kit included.**

- Plastic housing with IP-65 protection rating
- Backlit LCD display comprising 2 lines and 16 characters.
- Self-calibration of sensors.
- Quality control of sensors.
- Dosing pause during alarms and notification by a blinking LED.
- Proportional dosing.
- Adjustable set point.
- Redox measurement range: -999 to + 999 mV.
- Switch.
- Alarm relay.
- Output relay for external component.
- Minimum chemical product level input.
- PT100 temperature input (optional sensor).

*Fluidra Connect compatible*

See the sensors and the installation kit on page 205

| | Code | Standard Pack | Standard Weight in kg | Standard Volume in m³ |
|---|---|---|---|---|
| Redox Basic EV Plus<br>Sensor not included | **66161** | 1 | 2.1 | 0.01 |
| Redox sensor with calibration solutions | **36005** | 1 | 0.3 | 0.001 |
| Optional | | | | |
| PT100 sensor | **66758** | - | - | - |
| Flange for PT100 | **66759** | - | - | - |

+ info
Check sensors and installation kit on page 206

# PH & CHLORINE AUTOMATIC REGULATIONS - RESIDENTIAL POOLS



## Dual pH-EV Basic Control Plus

The DUAL pH-EV BASIC CONTROL dosing device has been specifically designed for automatically controlling pH and redox (ORP) levels.

It is a must in home spas and pools. It can work with a salt chlorinator or chlorine tablets, as it has relay output for enabling the chlorinator, in addition to controlling a pool's pH levels though a peristaltic pump.

Small in size, it comes with all of the components required for proper installation.

Depending on the device that has been connected, the control function can be set to the ON-OFF setting or proportional setting (ideal for solenoid valves).

*Fluidra Connect compatible*

**General technical features**

- Automatic pH or redox control and dosing system.
- Measurement range of 0–14 (pH) and 0–100 mV (redox).
- Includes full installation kit comprising a pH and Redox sensor, sensor holder, standard solutions, suction and blow pipes and suction- and blow-pipe fittings.
- ABS casing with IP65 protection rating.
- Digital screen that gives pH, redox (ORP) and temperature (optional Pt100) readings
- Remote on-off input (230 VAC) that keeps display lit up for calibration and programming.
- Chemical product level inlet.
- Alarm relay.

| | Code | Standard Pack | Standard Weight in kg | Standard Volume in $m^3$ |
|---|---|---|---|---|
| Dual pH-EV Basic Control 1.5 l/h compatible with Fluidra Connect (includes sensors) | **66180** | 1 | - | - |
| SPA pH-EV 0.4 l/h Dual Basic Control compatible with Fluidra Connect (includes sensors) | **66181** | 1 | - | - |
| Optional | | | | |
| PT100 sensor | **66758** | - | - | - |
| Flange for PT100 | **66759** | - | - | - |



## Control Basic Next

The NEXT control and dosing device has been specifically designed for the automatic control of pH and redox levels. It can be set to control whichever of these two functionalities is required.

It is the most simple control and dosing device in the market. Small in size, it has all of the components required for immediate installation.

**General technical features**

- Automatic pH or redox control and dosing system.
- Measurement range of 0–14 (pH) and 0–100 mV (redox).
- It comes with a full installation kit, made up of a pH or redox sensor (depending on the model), a sensor holder, standard solutions, suction and blow pipes, and suction and blow pipe fittings.
- ABS casing with IP65 protection rating.
- Digital display screen for both pH and redox readings.
- Remote on-off input (230 VAC) that keeps display lit up for calibration and programming.

| | Code | Standard Pack | Standard Weight in kg | Standard Volume in $m^3$ |
|---|---|---|---|---|
| Control Basic pH 1.5 l/h NEXT (pH sensor included) | **66162** | 1 | - | - |
| Control Basic pH 3 l/h NEXT (pH sensor included) | **66336** | 1 | - | - |
| Control Basic ORP 1.5 l/h NEXT (ORP sensor included) | **66163** | 1 | - | - |
| Control Basic ORP 3 l/h NEXT (ORP sensor included) | **66337** | 1 | - | - |
| Control Basic pH 0.4 l/h NEXT SPA (pH sensor included) | **66156** | 1 | - | - |
| Control Basic ORP 0,4 l/h NEXT SPA (ORP sensor included) | **66157** | 1 | - | - |

## PH & CHLORINE AUTOMATIC REGULATIONS - RESIDENTIAL POOLS



### Redox Basic EV Next

The NEXT control and dosing unit has been specifically designed for automatically controlling redox levels. It is the most simple control and dosing device in the market. Small in size, it has all of the components required for immediate installation.

**General technical features**

- Automatic redox control and dosing system.
- Measurement range of 0...1000 mV.
- It comes with a full installation kit, made up of a redox sensor, a sensor holder, standard buffer solutions, suction and blow pipes, and suction and blow pipe fittings.
- ABS casing with IP65 protection rating.
- Digital screen that gives redox readings.
- Remote on-off input (230 VAC) that keeps display lit up for calibration and programming.

| | Code | Standard Pack | Standard Weight in kg | Standard Volume in $m^3$ |
|---|---|---|---|---|
| Redox Basic EV Next<br>Includes redox sensor | **66174** | 1 | - | - |

| **Installation kit** |  |  |  |  |
|---|---|---|---|---|
| Control Basic | • | • | • | • |
| Redox Basic | | | • | • |

| **Sensors** |  |  |  |  |
|---|---|---|---|---|
| pH sensor with calibration solutions (Code: 36004) | • | | • | |
| Redox sensor with calibration solutions (Code: 36005) | | • | | • |

+ info
Further information on **PRODUCTS**
www.astralpool.com

# DOSING PUMPS

## Optima dosing pump

The OPTIMA dosing pump represents the development of more than 30 years of experience in the automatic dosing field. This new series reduces the number of pumps required to meet the various dosing needs.

The OPTIMA dosing pump series, with its new power supply technology from 90, VCA to 265 VCA and at 50-60 Hz, ensures a precision and reliability never seen before.

Integration of many functions due to its simple programming, an alphanumeric display, the possibility of multilingual programming of the menu and a new technology which permit controlled flow rate and back pressure. Allows to use the same model for various applications providing a great versatility.

Systems manufactured in compliance with EC standards. IP5 protection. 90-265V AC 50/60 Hz power supply. Components in contact with chemicals are made of polypropylene, Viton, Teflon and PVC. (Other materials are available if made to order.) Acid-resistant casing. Moisture-resistant membrane push buttons. Built-in purge valve. No lubrication and little maintenance work required. Sensors and calibration solutions not included. Also available with a peristaltic pump (see page 208).

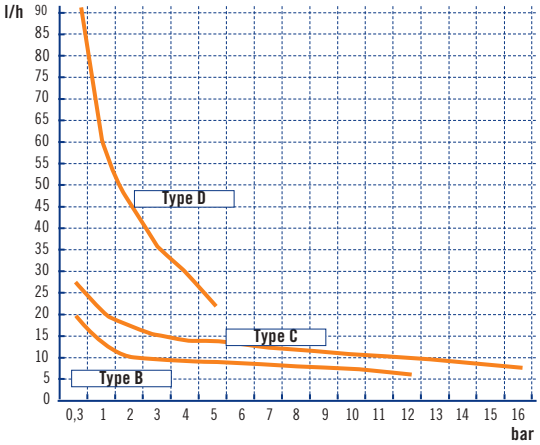


| Sensors |  | | | |
|---|---|---|---|---|
| pH sensor with calibration solutions (Code: 36004) | • | | • | |
| Redox sensor with calibration solutions (Code: 36005) | | • | | • |



## OPTIMA constant flow rate analogue dosing pump

In OPTIMA constant flow rate analogue dosing pumps, the flow rate can be set as a percentage using the potentiometer under the front panel, which modifies the pump's operation frequency.
The pumps in this range have an level inlet sensor.

**Double scale adjustment:** the maximum dosing frequency can be divided into 5. This double scale allows users to have two pumps with a single unit.

Power supply from 90 to 230 VCA at 50-60 Hz with plug and switch

| | Code | Standard Pack | Standard Weight in kg | Standard Volume in $m^3$ |
|---|---|---|---|---|
| **Adjustable manual Optima pump** | | | | |
| B-type pump of5–10 bar and 2–5 l/h | **57132** | 1 | 3.5 | 0.01 |
| C-type pump of 5 bar and 10 l/h | **57133** | 1 | 4.5 | 0.01 |
| D-type pump of 5 bar and 120 l/h | **57135** | 1 | 4.5 | 0.01 |



## OPTIMA NEXT constant flow rate analogue dosing pump

The flow rate is fully adjustable from the flow meter. Power supply from 90 to 230 VCA at 50-60 Hz without plug.

| | Code | Standard Pack | Standard Weight in kg | Standard Volume in $m^3$ |
|---|---|---|---|---|
| Adjustable Optima manual pump at 8 bar and 5 l/h | **66164** | 1 | - | - |

See the sensors on page 206

# DOSING PUMPS



## OPTIMA proportional and volumetric dosing pump

OPTIMA pumps provide all the functions of proportional dosing in a single model.

**Features:**
- Proportional with analogue signals 4 - 20 mA.
- Proportional with digital signals and the possibility of:
  - Multiplying the input impulses (1:n)
  - Dividing the input impulses (n:1)
  - Function in ppm
  - The pump has a memory function for processing input impulses dosing
- Level alarm with pump disconnection.
- Maximum dosing flow rate to prevent overdosing.
- Password for protecting programmed data
- Possibility of alarm connection
- Power supply from 90 to 265 VCA at 50-60 Hz with plug

| | Code | Standard Pack | Standard Weight in kg | Standard Volume in $m^3$ |
|---|---|---|---|---|
| Type B Model 7-10 bar and 5 litres | **57136** | 1 | 3.5 | 0.01 |
| Type C Model 5 bar and 10 litres | **57137** | 1 | 4.5 | 0.01 |
| Type D Model 5 bar and 20 litres | **57138** | 1 | 4.5 | 0.01 |



## OPTIMA NEXT proportional and volumetric dosing pump

OPTIMA pumps provide all the functions of proportional dosing in a single model.

**Features:**
- Proportional with analogue signals 4 - 20 mA.
- Reading of pulses/minute.
- Chemical product minimum level inlet.
- pulse entry for dosing proportional from pulse emitter counter.
- Remote start/stop.
- Power supply from 90 to 265 VCA at 50-60 Hz without plug.

| | Code | Standard Pack | Standard Weight in kg | Standard Volume in $m^3$ |
|---|---|---|---|---|
| Model 8 bar and 5 litres | **66165** | 1 | - | - |



## OPTIMA PLUS dosing pump with pH or redox tester

OPTIMA dosing pump with built-in pH/Redox control. pH/Redox instrument.
Automatic calibration: Calibration by simply pressing a button, with the possibility of controlling the level of sensor efficiency.

**Features:**
- 90-265 VAC 50/60 Hz power supply
- Manual temperature compensation for pH or optionally automatic via Pt100.
- 4...20mA output for printed register or transmission of the reading.
- Level alarm with pump disconnection or simple warning of lack of product by means of the alarm relay.
- Alarm notifying deactivation of the programmable setpoint across whole of the measurement range.
- Dosing delay time to stop the dosing pump from injecting product in event of sensor malfunction.
- Maximum dosing pump flow rate for preventing overdosing.
- Password for protecting programmed data.
- Possibility of alarm connection.

| | Code | Standard Pack | Standard Weight in kg | Standard Volume in $m^3$ |
|---|---|---|---|---|
| Type C Optima Redox/pH control dosing pump (10 bar and 5 l/h and 5 bar and 10 l/h) | **66179** | 1 | 4.5 | 0.01 |
| pH sensor with calibration solutions | **36004** | 1 | 0.4 | 0.001 |
| Redox sensor with calibration solutions | **36005** | 1 | 0.3 | 0.001 |
| Optional | | | | |
| PT100 sensor | **66758** | - | - | - |
| Flange for PT100 | **66759** | - | - | - |

COMPATIBLE NN thing

*Fluidra Connect compatible*

**Sensor not included (see kits on page 206)**

**Sensor holder not included (code 01306)**

+ info
PDB
Further information on **PRODUCTS**
**www.astralpool.com**

# DOSING PUMPS



**Sensor not included**
**(see kits on page 206)**
**Sensor holder not included**
**(code 01306)**

## OPTIMA NEXT dosing pump with pH or redox tester

OPTIMA dosing pump with built-in pH/Redox control instrument.
Automatic calibration by simply pressing a button, with the possibility of controlling the degree of sensor efficiency.

**Features:**
- Power supply from 90 to 265 VCA at 50-60 Hz without plug
- Manual temperature adjustment for pH or optional automatic adjustment with PT100 (sensor not included).
- Level control input.
- Remote off control.

| | Code | Standard Pack | Standard Weight in kg | Standard Volume in m³ |
|---|---|---|---|---|
| Optima Next dosing pump redox control/pH control at 8 bar and 5 l/h | **66166** | 1 | - | - |
| pH sensor with calibration solutions | **36004** | 1 | 0.4 | 0.001 |
| Redox sensor with calibration solutions | **36005** | 1 | 0.3 | 0.001 |



## Bracket for mounting above tank

Optional support for mounting the OPTIMA series and pH Basic horizontally; for example, above chemical solution tanks.

| | Code | Standard Pack | Standard Weight in kg | Standard Volume in m³ |
|---|---|---|---|---|
| | **36830** | 1 | 0.1 | 0.002 |



## Peristaltic dosing pumps

90/260V 50/60 Hz electrical connection.

**The installation kit includes:**
- Transparent glass-type flexible 2-m PVC suction pipe.
- Semi-rigid white polyethylene 2-m return pipe.
- 3/8" BSP m. injection valve.
- Pool floor filter.

| | Code | Standard Pack | Standard Weight in kg | Standard Volume in m³ |
|---|---|---|---|---|
| Peristaltic pump 4 l/h (3 bar) | **57179** | 1 | - | - |
| Peristaltic pump 12 l/h (1 bar) | **57178** | 1 | - | - |



## Polyethylene cylindrical tanks

To hold chemicals for dosage pumps.

| | Code | Standard Pack | Standard Weight in kg | Standard Volume in m³ |
|---|---|---|---|---|
| Capacity: 125 l | **01314** | 1 | 4.5 | 0.120 |
| Capacity: 250 l | **01315** | 1 | 10.0 | 0.390 |
| Capacity: 350 l | **01316** | 1 | 14.0 | 0.510 |
| Capacity: 500 l | **01317** | 1 | 21.5 | 0.760 |
| Capacity: 1000 l | **28831** | 1 | - | - |



## Manual stirrer

For Polyethylene tanks.

| | Code | Standard Pack | Standard Weight in kg | Standard Volume in m³ |
|---|---|---|---|---|
| Length 60 cm | **01318** | 1 | 0.5 | 0.010 |
| Length 90 cm | **01319** | 1 | 1.2 | 0.020 |

# DOSING EQUIPMENT

## Floating dispenser



36620 69668



38630 38629

Allows for dosing and easy chemical product handling in the pool.

| | Code | Standard Pack | Standard Weight in kg | Standard Volume in m³ |
|---|---|---|---|---|
| **Shark Series** | | | | |
| Floating dispenser for 200 g tablets | **36620** | 12 | 8.0 | 0.14 |
| **Blue Line** | | | | |
| Dispenser with tablet level indicator | **69668** | 12 | 3.8 | 0.067 |
| **Basic Line** | | | | |
| Floating dispenser for 200 g tablets | **38630** | 12 | 4.0 | 0.079 |
| Floating dispenser for 20 g tablets | **38629** | 12 | 4.0 | 0.030 |

## Dossi-5 in-line and Dossi-10 in-line bromine feeders



Bromine dispenser. Manufactured from unalterable plastic materials (ABS). With regulation valve, manual purge, Venturi automatic depression purge, and opening key. For pools up to 45 m³ with the Dossi-5 dispenser and up to 90 m³ Dossi-10 dispenser. Connections 1½". Ø 200 mm.

| | Code | Standard Pack | Standard Weight in kg | Standard Volume in m³ |
|---|---|---|---|---|
| **Dossi-5 in-line. Height 486 mm.** Approximate capacity: 5 kg of tablets | **21438** | 1 | 3.7 | 0.031 |
| **Dossi-10 in-line. Height 725 mm.** Approximate capacity: 10 kg of tablets | **21439** | 1 | 4.8 | 0.049 |

## Chlorine and bromine feeder Dossi-5 and Dossi-10 off-line



Bromine and chlorine feeder. Manufactured from unalterable plastic materials (ABS). Approximate capacity: 5 kg of tablets for Dossi-5 and 10 kg for Dossi-10. Supplied with two valves in order to stop the water flow. Height 486 mm and Ø 200 mm. Connections Ø 20 mm.

| | Code | Standard Pack | Standard Weight in kg | Standard Volume in m³ |
|---|---|---|---|---|
| **Dossi-5 off-line For pools up to 100 m³** | **01413** | 1 | 3.7 | 0.031 |
| **Dossi-10 off-line For pools up to 200 m³** | **43998** | 1 | 4.86 | 0.048 |

| | Volume of chlorine-treated pools | Volume of bromine-treated pools |
|---|---|---|
| **Dossi 5** | 20 m³ - 80 m³ | 4 m³ - 50 m³ |
| **Dossi 10** | 20 m³ - 160 m³ | 4 m³ - 100 m³ |

+ info
Further information on **PRODUCTS**
www.astralpool.com

## DOSING EQUIPMENT



### 3.5 kg Dossi-3 chlorine and bromine feeder

Chlorine and bromine feeder. Manufactured from unalterable plastic materials (ABS). Approximate capacity: 3.5 kg of tablets. Lid closing with double safety system. Easy to operate regulation valves. For pools up to 60 $m^3$ with Chlorine and up to 30 $m^3$ with bromine. Height: 405 mm.

| | Code | Standard Pack | Standard Weight in kg | Standard Volume in $m^3$ |
|---|---|---|---|---|
| **Dossi-3, in-line**<br>For direct connection to pipework<br>With 1½" connectors | **24429** | 1 | 1.81 | 0.03 |
| **Dossi-3 off-line**<br>For by-pass connection with flexible tube | **24430** | 1 | 1.90 | 0.031 |

**Code 24429 IN-LINE**

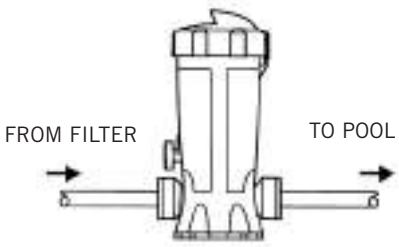


**Code 24430 OFF-LINE**

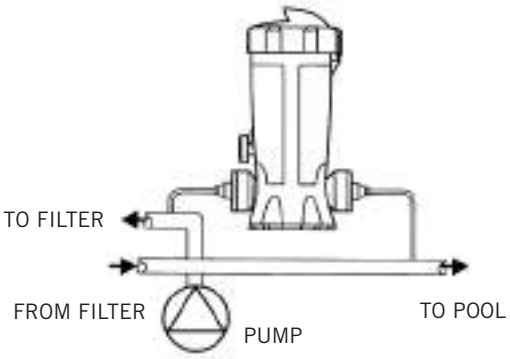

## DOSING EQUIPMENT

### INSTALLATION DIAGRAM OF CHLORINE/BROMINE DOSING UNITS AND AUTOMATIC REGULATING AND CONTROL EQUIPMENT

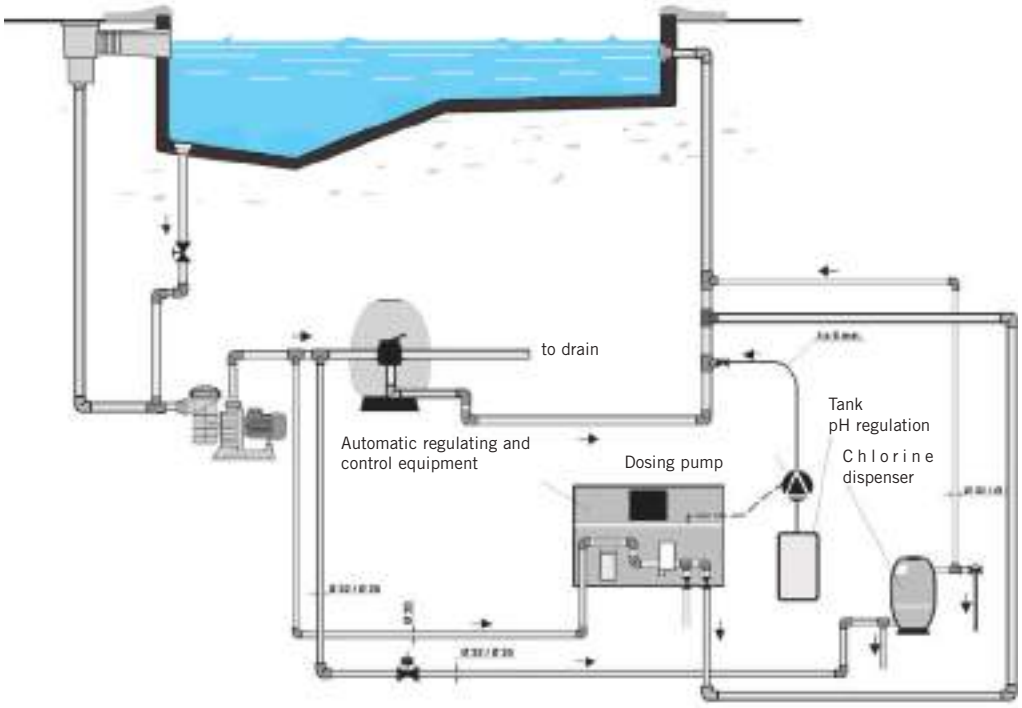




### Compact dosage tank

Trichlor and bromine tablet dosage unit with automatic safety valve. Made out of fibreglass and polyester.

| | Code | Standard Pack | Standard Weight in kg | Standard Volume in m³ |
|---|---|---|---|---|
| **Compact dosage tank 40 l**<br>Trichlor (for pools from 200 to 500 m³)<br>Bromine (for pools from 150 to 300 m³) | **16631** | 1 | 15 | 0.134 |
| **Compact dosage tank 60 l**<br>Trichlor (for pools from 500 to 1000 m³)<br>Bromine (for pools from 300 to 450 m³) | **16632** | 1 | 18 | 0.190 |



### Safety valve kit

PVC safety valve, with a spring and metallic pull ring. Opening pressure 2.5 - 3 bar (Kg/cm²).

| | Code | Standard Pack | Standard Weight in kg | Standard Volume in m³ |
|---|---|---|---|---|
| For 40 l dosage tank | **16633** | 1 | 0.4 | 0.002 |
| For 60 l dosage tank | **16634** | 1 | 0.4 | 0.002 |

+ info
Further information on **PRODUCTS**
**www.astralpool.com**

# WATER METERS & CONTROL DEVICES



## Woltman type turbine meters

Woltman type axial turbine water meter, with numerical counter readout, and numbered drums. Dry dial with magnetic transmission. Easily removable gearwork and turbine. Pre-set for pulse emission. IP-68 protection level. CYBLE type pulse emission.

| | Code | Standard Pack | Standard Weight in kg | Standard Volume in $m^3$ |
|---|---|---|---|---|
| 2" gauge - 50 mm | **20430** | 1 | 12.0 | 0.004 |
| 2½" gauge - 65 mm | **20431** | 1 | 13.6 | 0.004 |
| 3" gauge - 80 mm | **20432** | 1 | 14.6 | 0.004 |
| 4" gauge - 100 mm | **20433** | 1 | 20.0 | 0.006 |
| 5" gauge - 125 mm | **20434** | 1 | 30.0 | - |
| 6" gauge - 150 mm | **20435** | 1 | 36.0 | 0.009 |
| 8" gauge - 200 mm | **20436** | 1 | 55.0 | 0.012 |
| CYBLE type emitter K= 1 l/pulse | **23235** | 1 | - | - |
| CYBLE type emitter K= 10 l/pulse | **23235-0010** | 1 | - | - |
| CYBLE type emitter K= 100 l/pulse | **23235-0100** | 1 | - | - |



## Electrically driven plastic valves - Nylon

Threaded connection. Manually operated ON position Flow regulator. Stainless Steel AISI-302 spring. Maximum working pressure = 10 atm.

| | Code | Standard Pack | Standard Weight in kg | Standard Volume in $m^3$ |
|---|---|---|---|---|
| 1½" connections | **09392** | 1 | 0.5 | - |
| 2" connections | **56116** | 1 | 0.7 | - |
| 3" connections | **57641** | 1 | 1.1 | - |

| MODELS | 09392 | 56116 | 57641 |
|---|---|---|---|
| Connection | 1½" | 2" | 3" |
| Min. pressure kg/$cm^2$ | 1 | 1 | 1 |
| Max. pressure kg/$cm^2$ | 10 | 10 | 10 |
| Maximum flow $m^3$/h | 30 | 40 | 60 |

**Pressure and flow diagrams**

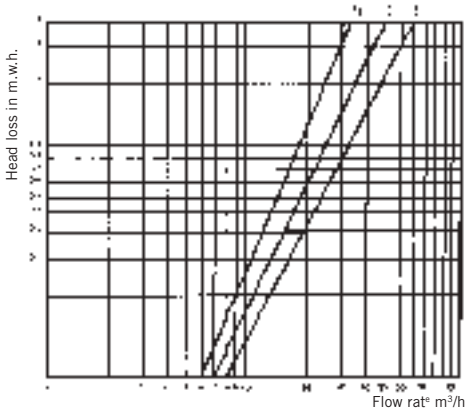




## 24 Volt solenoids

To install in electric valves with code 09392, 06935 and 06936.

| Code | Standard Pack | Standard Weight in kg | Standard Volume in $m^3$ |
|---|---|---|---|
| **09393** | 1 | - | - |

## WATER METERS & CONTROL DEVICES

### BALANCE TANK INSTALLING DIAGRAM

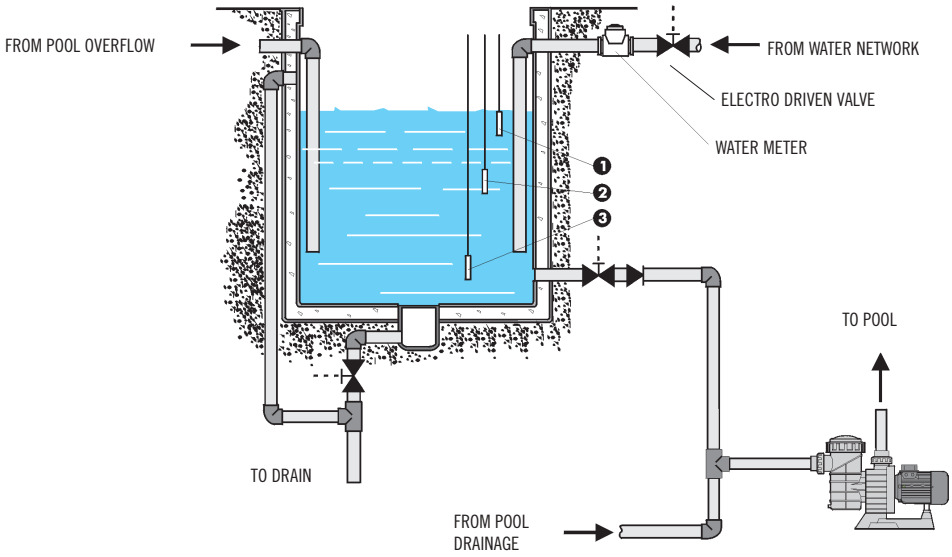


1. Maximum water level signal in BALANCE TANK for starting the pumping system
2. Minimum water level signal in POOL for opening the electrically operated valve for make-up water.
3. Minimum level signal in BALANCE TANK for shutting down the pumping system.

### Electronic operating panel for overflow pool balance tank

For overflow pool. Water level sensor with 2 m cable.

**For 2 water levels control panel:**

* Minimum safety level for pump operation: The pump stops working if water level doesn't have the minimum set level.
* Top-up level, whereby a signal is sent to the solenoid valve to top up the level of water in the pool. Signal to the valve at 220 V II and 24 V II.

| | Code | Standard Pack | Standard Weight in kg | Standard Volume in $m^3$ |
|---|---|---|---|---|
| | **12061** | 1 | - | - |

**3 water level control panel:**

* Minimum safety level for pump operation: The pump stops working if water level reaches the minimum set level.
* Water make up level: Gives the solenoid water inlet valve, the opening signal to keep correct water level in balance tank. Solenoid valve signal in 220 V II & 24 V II.
* Forced start-up, so that the pump unit starts up when the balance tank overflows due to a burst pipe or non-return valve failure.

| | Code | Standard Pack | Standard Weight in kg | Standard Volume in $m^3$ |
|---|---|---|---|---|
| Dual frequency (50/60 Hz) | **12062** | 1 | - | - |





# CLEANING EQUIPMENT


217 • Top access automatic cleaners
223 • Automatic filter bag cleaners
224 • Pool cleaner accessories
224 • Automatic pool cleaners
225 • Manual pool cleaners - Blue Line Range
227 • Manual pool cleaners - Shark Range
228 • Manual pool cleaners - Classic Range
231 • Net'n'Clean Integrated Cleaning System
233 • Hoses

# TOP ACCESS AUTOMATIC CLEANERS (AND BAG)

## Comparative table of automatic cleaners for private pools

| |  |  |  |  |  |  |  |  |  |  |  |
|---|---|---|---|---|---|---|---|---|---|---|---|
| **MODELS** | **Sonic 4** | **Sonic 5** | **R3** | **R5** | **R7** | **Pulit Advance+ 3** | **Pulit Advance+ 5** | **Pulit Advance+ 7 Duo** | **AstralPool H3 DUO** | **AstralPool H5 DUO** | **AstralPool H7 DUO** |
| **Code** | **66386** | **68056** | **66666** | **66665** | **67981** | **67975** | **63176** | **67976** | **63179** | **66016** | **69967** |
| **Bottom** | Yes | Yes | Yes | Yes | Yes | Yes | Yes | Yes | Yes | Yes | Yes |
| **Walls** | Yes | Yes | No | Yes | Yes | No | Yes | Yes | No | Yes | Yes |
| **Water line** | No | Yes | No | No | Yes | Yes | Yes | Yes | No | Yes | Yes |
| **Technology** | Robotics(2) | | | | | | | | | | |
| **Remote control** | No | No | No | No | Yes, APP | No | No | Yes, APP | No | No | Yes, APP |
| **Cleaning cycles (h)** | 2 | 1.5 / 2 | 1,5 | 2 | 1.5 / 2 / 2.5 | 1,5 | 1.5 / 2 | 1.5 / 2 / 2.5 | 1.5 / 2 | 1.5 / 2 | 1.5 / 2 / 2.5 |
| **Aquasmart** | Yes | Yes | Yes | Yes | Yes | Yes | Yes | Yes | Yes | Yes | Yes |
| **Smart Gyro navigation system** | Yes | Yes | Yes | Yes | Yes | Yes | Yes | Yes | Yes | Yes | Yes |
| **External programmer option** | Yes | Yes | Yes | Yes | Yes | Yes | Yes | Yes | Yes | Yes | Yes |
| **Built-in programmer** | No | No | No | No | Yes | No | No | Yes | No | No | Yes |
| **LED indicator (filter full)** | No | Yes | No | No | Yes | No | Yes | Yes | Yes | Yes | Yes |
| **Swivel** | Yes | Yes (electronic) | | | | Yes | Yes | Yes | Yes | Yes | Yes |
| **Pool shape selector** | No | No | No | No | Yes | No | No | Yes | No | No | Yes |
| **Obstacle detector** | Yes | Yes | Yes | Yes | Yes | Yes | Yes | Yes | Yes | Yes | Yes |
| **Length of cable (m)** | 14 | 18 | 16 | 16 | 18 | 16 | 18 | 18 | 18 | 18 | 18 |
| **Caddy** | No | Caddy | No | No | No | No | Caddy | Caddy | Trolley | Trolley | Trolley |
| **Rate of suction ($m^3/h$)** | 19 | 19 | 20 | 20 | 19 | 19 | 19 | 20 | 20 | 20 | 20 |
| **Filter type** | Bottom Access - Bag | Bottom Access - Bag | Top Access - Easy View 3D | Top Access - Easy View 3D | Top Access - Easy View 3D | Top Access - 3D | Top Access - 3D | Top Access - 3D | Top Access - Easy View 3D | Top Access - Easy View 3D | Top Access - Easy View 3D |
| **Extra-deep cleaning system** | No | No | Max scrubber | Max scrubber | Max scrubber | No | Vibrating brush | Vibrating brush | Vibrating brush | Vibrating brush | Vibrating brush |
| **Adjustable suction nozzles** | No | No | Yes | Yes | Yes | Yes | Yes | Yes | Yes | Yes | Yes |
| **Brushes / Wheels** | PVA brush | PVA brush | PVA wheels | PVA wheels | PVA wheels | PVA wheels | PVA brush | PVA brush | PVA brush | PVA brush | PVA brush |
| **Power pack** | Basic SPS | SPS 100 | Basic SPS | Basic SPS | SPS APP | Basic SPS | SPS 100 | SPS APP | SPS 100 | SPS 100 | SPS APP |
| **Electrical specifications** | 230 V/ 50 Hz / 150 W | 230 V/ 50 Hz / 150 W | 100-250 V/ 50-60 Hz / 210 W | 100-250 V/ 50-60 Hz / 210 W | 100-250 V/ 50-60 Hz / 210 W | 100-250 V/ 50-60 Hz / 210 W | 100-250 V/ 50-60 Hz / 210 W | 100-250 V/ 50-60 Hz / 210 W | 100-250 V/ 50-60 Hz / 210 W | 100-250 V/ 50-60 Hz / 210 W | 100-250 V/ 50-60 Hz / 210 W |

(1) Hydrorobotic technology vacuums and moves the pool cleaner with just one motor.
(2) Robotic technology uses one or two motors to move the pool cleaner.

+ info Robots
Further information at
robots.astralpool.com

## TOP ACCESS AUTOMATIC CLEANERS

# HDuo

The leading model



AstralPool HDuo is our leading model of robotic pool cleaners.

Its cutting-edge technology and contemporary design make it our top-of-the-range cleaner for private pools.



Vibrating brush

Raised adjustable suction nozzles for better suction

**Gyro Technology**
This new smart navigation system will ensure your pool is thoroughly cleaned every time. It avoids all types of obstacles and has a tangle-free power cable.



**MORE POWERFUL**
**MORE EFFICIENT**
**MORE RELIABLE**

Advantages of a single platform and a block comprising 2 motors and 1 filtration pump:

- Improved power transmission.
- More effective vibration cleaning brush.
- Lasts longer: no drive belts required and enhanced motor seals.
- Enhanced features: double traction motor + Gyro system.
- Easy for customers to repair: 4 screws to replace the motor block and direct access to gears and bearings.
- Recommended for gradients of up to 30°.





| MODELS | H3 DUO | H5 DUO | H7 DUO |
|---|---|---|---|
| Code | 63179 | 66016 | 69967 |
| Bottom | Yes | Yes | Yes |
| Walls and water line | No | Yes | Yes |
| Remote control | No | No | Yes, with APP |
| Cleaning cycles (h) | 1.5 / 2 | 1.5 / 2 | 1.5 / 2 / 2.5 |
| Aquasmart | Yes | Yes | Yes |
| Gyro navigation system | Yes | Yes | Yes |
| External programmer option | Yes | Yes | Yes |
| Built-in programmer | No | No | Yes |
| LED indicator (filter full) | Yes | Yes | Yes |
| Swivel | Yes | Yes | Yes |
| Length of cable (m) | 18 | 18 | 18 |
| Maximum pool length (m) | 15 | 15 | 15 |
| Maximum pool surface area ($m^2$) | 100 | 100 | 100 |
| Caddy | Trolley | Trolley | Trolley |
| Rate of suction ($m^3/h$) | 20 | 20 | 20 |
| Filter type | Top access - Easy view | Top access - Easy view | Top access - Easy view |
| Extra-deep cleaning system | Vibrating brushes | Vibrating brushes | Vibrating brushes |
| Adjustable suction nozzles | Yes | Yes | Yes |
| Drive motors | 2 | 2 | 2 |
| Suction motors | 1 | 1 | 1 |
| Brushes / Wheels | PVA brushes | PVA brushes | PVA brushes |
| Power pack | SPS 100 | SPS 100 | SPS APP |
| Required power supply | 100-259 V/ 50-60 Hz / 210 W | 100-259 V/ 50-60 Hz / 210 W | 100-259 V/ 50-60 Hz / 210 W |

+ info Robots
Further information at
**robots.astralpool.com**

## AUTOMATIC TOP ACCESS CLEANERS

**Three-dimensional filters**
Come with a new ultrafine 3D filter as a standard feature.

**LED indicator**
The LED indicator shows when the filter is full.

**Easy view**
The transparent windows make it easy to see the level of debris.

**Easy open**
The filters are easy to reach from the top of the cleaner.

**Clean hands**
There is no need to come into contact with the dirt to clean the filter.

**PVA brushes**
The best quality for a better grip on stick surfaces.

**Adjustable suction nozzles**
Maximum suction.

Suction motor



New traction system





**All units come with a 3-year warranty.**

Video available

### H3 DUO

Cleaning
**Bottom**

Pool size
**100 m²**

Cleaning cycles
**1.5 H / 2 H**

Cable
**18 m**



### H5 DUO

Cleaning
**Bottom, walls and water line**

Pool size
**100 m²**

Cleaning cycles
**1.5 H / 2 H**

Cable
**18 m**



### H7 DUO

Cleaning
**Bottom, walls and water line**

Pool size
**100 m²**

Cleaning cycles
**1.5 H / 2 H / 2.5 H**

Cable
**18 m**



| | Code | Standard Pack | Standard Weight in kg | Standard Volume in m³ |
|---|---|---|---|---|
| H3 Duo pool cleaner | **63179** | - | 17.5 | 16 |
| H5 Duo pool cleaner | **66016** | - | 17.5 | 16 |
| H7 Duo APP pool cleaner | **69967** | - | 17.5 | 16 |

+ info Robots
Further information at
robots.astralpool.com

## AUTOMATIC TOP ACCESS CLEANERS

# PULIT+ advance

The experts' choice

AstralPool's Pulit Advance + cleaners are robust, reliable and efficient. Top-of-the-range cleaners with Gyro, 3D filters in the classic version with 2 motors are features that make it the expert's choice.







Front


Side

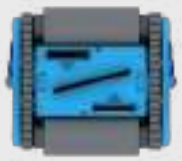
Bottom


Top

| | PULIT+ advance 3 | PULIT+ advance 5 | PULIT+ advance 7 duo |
|---|---|---|---|
| **Code** | **67975** | **63176** | **67976*** |
| **Bottom** | Yes | Yes | Yes |
| **Walls** | No | Yes | Yes |
| **Remote control from app** | No | No | Yes |
| **Cleaning cycles (h)** | 1.5 | 1.5 / 2 | 1.5 / 2 / 2.5 |
| **Aquasmart** | Yes | Yes | Yes |
| **Possibility of external programmer** | Yes | Yes | Yes |
| **Built-in programmer** | No | No | Yes |
| **Filter dirt level indicator** | No | Yes | Yes |
| **Smart Gyro navigation system** | Yes | Yes | Yes |
| **Pool shape selector** | No | No | Yes |
| **Obstacle detector** | No | No | Yes |
| **Length of floating cable (m)** | 16 | 18 | 18 |
| **Caddy** | No | Caddy | Caddy |
| **Rate of suction ($m^3/h$)** | 19 | 19 | 20 |
| **Filter type** | Top Access - 3D | Top Access - 3D | Top Access - 3D |
| **Extra-deep cleaning system** | No | Vibrating brush | Vibrating brush |
| **Adjustable suction inlet** | Yes | Yes | Yes |
| **Drive motor** | 24V DC brushless | 24V DC brushless | Block with 2 motors |
| **Suction motor** | 24V DC brushless | 24V DC brushless | In block |
| **Brushes / Wheels** | PVA brush | PVA brush | PVA brush |
| **Power pack** | SPS Basic | SPS 100 | SPS APP |
| **Required power supply** | 100-259 V/ 50-60 Hz / 210 W | 100-259 V/ 50-60 Hz / 210 W | 100-259 V/ 50-60 Hz / 210 W |

***While stocks last**

+ info Robots

Further information at
**robots.astralpool.com**

## AUTOMATIC TOP ACCESS CLEANERS

**Three-dimensional filters**
Come with a new ultrafine 3D filter as a standard feature.

**LED indicator**
The LED indicator shows when the filter is full.

**Easy open**
The filters are easy to reach from the top of the cleaner.

**Clean hands**
There is no need to come into contact with the dirt to clean the filter.

**PVA brushes**
The best quality for a better grip on stick surfaces.

**Adjustable suction nozzles**
Maximum suction.



*Aquabot RC app for iOS and Android*

Bluetooth
Bluetooth remote control

### PULIT+ advance 3



Cleaning
**Bottom**

Pool size
**60 m²**

Cleaning cycles
**1.5 H**

Cable
**16 m**

### PULIT+ advance 5



Cleaning
**Bottom, walls and water line**

Pool size
**80 m²**

Cleaning cycles
**1.5 H / 2 H**

Cable
**18 m**

### PULIT+ advance 7 duo



Cleaning
**Bottom, walls and water line**

Pool size
**100 m²**

Cleaning cycles
**1.5 H / 2 H / 2.5 H**

Cable
**18 m**

| | Code | Standard Pack | Standard Weight in kg | Standard Volume in m³ |
|---|---|---|---|---|
| Pulit Advance+ 3 pool cleaner | **67975** | 1 | - | - |
| Pulit Advance+ 5 pool cleaner | **63176** | 1 | - | - |
| Pulit Advance+ 7Duo pool cleaner | **67976** | 1 | - | - |

+ info Robots
Further information at
robots.astralpool.com

## AUTOMATIC TOP ACCESS CLEANERS

R SERIES

# The 4x4 filter bag

Series R cleaners come with Gyro technology
Their elegant design, ergonomic features and ease of use make them the best smart pool cleaners in the market.





Rotary brush

Raised adjustable suction nozzles for better suction



Cartridge with 3D filter

One wheel type for all types of pool surface

| | R3 | R5 | R7 |
|---|---|---|---|
| **Code** | **66666** | **66665** | **67981** |
| **Bottom** | Yes | Yes | Yes |
| **Walls** | No | Yes | Yes |
| **Remote control from app** | No | No | Yes |
| **Cleaning cycle (h)** | 1,5 | 2 | 1.5 / 2 / 2.5 |
| **Aquasmart** | Yes | Yes | Yes |
| **Possibility of external programmer** | Yes | Yes | Yes |
| **Built-in programmer** | No | No | Yes |
| **Filter dirt level indicator** | No | No | Yes |
| **Gyro navigation system** | Yes | Yes | Yes |
| **Length of the pool (m)** | 8 | 10 | 12 |
| **Pool shape selector** | No | No | Yes |
| **Obstacle detector** | Yes | Yes | Yes |
| **Length of floating cable (m)** | 16 with Swivel | 16 with Swivel | 18 with advanced swivel |
| **Electronic swivel** | Yes | Yes | Yes |
| **Caddy** | No | No | No |
| **Rate of suction ($m^3/h$)** | 20 | 20 | 19 |
| **Filter type** | Top Access - Easy View 3D | Top Access - Easy View 3D | Top Access - Easy View 3D |
| **Additional brush** | Max scrubber | Max scrubber | Max scrubber |
| **Adjustable suction inlet** | Yes | Yes | Yes |
| **Drive motor** | 24V DC | 24V DC | 24V DC |
| **Suction motor** | 24V DC | 24V DC | 24V DC |
| **Brushes / Wheels** | 4wd, PVA | 4wd, PVA | 4wd, PVA |
| **Power pack** | Basic SPS | Basic SPS | SPS APP |
| **Required power supply** | 100-250 V/ 50-60 Hz / 210 W | 100-250 V/ 50-60 Hz / 210 W | 100-250 V/ 50-60 Hz / 210 W |

+ info Robots
Further information at
**robots.astralpool.com**

## AUTOMATIC TOP ACCESS CLEANERS

**Three-dimensional filters**
Come with a new ultrafine 3D filter as a standard feature.

**Easy view**
The transparent windows make it easy to see the level of debris.

**Easy open**
The filters are easy to reach from the top of the cleaner.

**Clean hands**
There is no need to come into contact with the dirt to clean the filter.

**PVA wheels**
The best quality for a better grip on stick surfaces.

**Raised adjustable suction nozzles**
Maximum suction.

R3 R5



**Cleaning**
R3: Floor - R5: Floor, walls and waterline

**Pool size**
50 m² (R3) / 60 m² (R5)

**Cleaning cycles**
R3: 1.5 H - R5: 2 H

**Cable**
16 m long, with mechanical swivel

R7



**Cleaning**
Bottom, walls and water line

**Pool size**
80 m²

**Cleaning cycles**
1.5 H / 2 H / 2.5 H

**Cable**
"18 m, with advanced swivel



| | Code | Standard Pack | Standard Weight in kg | Standard Volume in m³ |
|---|---|---|---|---|
| R3 pool cleaner | **66666** | 1 | - | - |
| R5 pool cleaner | **66665** | 1 | - | - |
| R7 pool cleaner | **67981** | 1 | - | - |

Aquabot RC app for iOS and Android

Bluetooth
Bluetooth remote control

Video available







New advanced swivel

## AUTOMATIC FILTER BAG CLEANERS



The Sonic range comprises electronic pool cleaners with a classic filter bag with the option to change it for a cartridge filter that is easier to clean.



2-year warranty

### Sonic 4

Electronic pool cleaner with the classic filtration bag. Delivers high quality filtration and has a great waste storage capacity. Sonic covers the whole of a pool floor in a 2-h cycle. It has 14 m of cable, PVA brushes and high quality DC brushless motors (1 pump motor and 1 drive motor).

| | Code | Standard Pack | Standard Weight in kg | Standard Volume in $m^3$ |
|---|---|---|---|---|
| Sonic 4 pool cleaner | **66386** | 1 | - | - |
| **Option** | | | | |
| Convertible cartridge compatible with all bag pool cleaners | **AS6405300** | 1 | - | - |



**AS6405300 - Optional**



**Standard feature**



3-year warranty

### Sonic 5

Electronic pool cleaner with the classic filtration bag and convertible cartridge as a standard feature. Delivers high quality filtration and has a great waste storage capacity. The Sonic 5 covers the whole of a pool's floor walls and water line in a 1.5 or 2-hour cycle. It comes with a caddy, 18 m of cable with mechanical swivel, PVA brushes and high quality DC brushless motors (1 pump motor and 1 traction motor).Has LED indicator that shows when filter is full.

| | Code | Standard Pack | Standard Weight in kg | Standard Volume in $m^3$ |
|---|---|---|---|---|
| Sonic 5 pool cleaner | **68056** | 1 | - | - |



**Standard feature**



**Standard feature**



**Transformer**



**Swivel**





## POOL CLEANER ACCESSORIES



### Pump caddy for stand-alone pool cleaners

Made of anodized aluminium tube and a 460 mm x 370 mm plastic platform. Face plate in AISI-304 stainless steel.

| Code | Standard Pack | Standard Weight in kg | Standard Volume in $m^3$ |
|---|---|---|---|
| **04648** | 1 | 8.06 | 0.12 |

## AUTOMATIC POOL CLEANERS



### Splasher

Splasher is an hydraulic suction cleaner. It's using the pool filtration system to work and collect the debris in the pump pre-filter.

It is simply connected to the skimmer vacuum plate and works at the same time than the pool filtration.

Its membrane system ensures an optimum and quieter performance.

Cleaning areas: floor and walls.
Pool floors types: flat or gentle slopes.
Pool size: up to 9m length.
Filter pump minimum required pressure: 1/2 HP.
Included in pack : 9,6m hose.

| | Code | Standard Pack | Standard Weight in kg | Standard Volume in $m^3$ |
|---|---|---|---|---|
| Splasher suction cleaner | **66281** | 1 | 5.6 | 0.05 |



### Mamba

Mamba is an hydraulic suction cleaner. It's using the pool filtration system to work and collect the debris in the pump pre-filter.

It is simply connected to the skimmer vacuum plate and works at the same time than the pool filtration.

The Mamba's dual suction design ensures the pump and filter are never starved of water. The adjustable bypass valve allows for operation from small to large capacity filtration pumps.

Cleaning areas: floor and walls.
Pool floors types: flat or gentle slopes.
Pool size: up to 9m length.
Filter pump minimum required pressure: 1/2 HP.
Included in pack : 12 x 80 cm hose sections, flow regulator, universal adapter.

| | Code | Standard Pack | Standard Weight in kg | Standard Volume in $m^3$ |
|---|---|---|---|---|
| Mamba suction cleaner | **60092** | 1 | 7 | 0.061 |

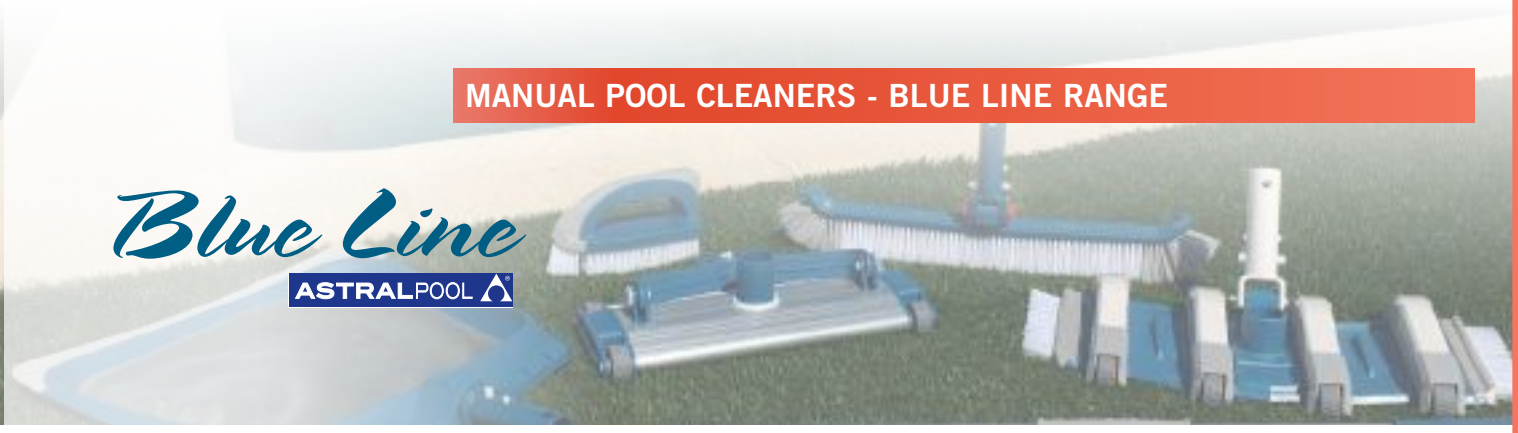


# MANUAL POOL CLEANERS - BLUE LINE RANGE



69661

## Blue Line manual suction cleaner - wing-nut fastening

| | Code | Standard Pack | Standard Weight in kg | Standard Volume in $m^3$ |
|---|---|---|---|---|
| 1 ½" 350 flexible pool cleaner | **69661** | 6 | 6.6 | 0.053 |
| 1 ½" 350 aluminium pool cleaner | **69673** | 6 | - | - |
| Triangular pool cleaner | **69663** | 6 | - | - |
| Oval pool cleaner | **69664** | 6 | - | - |



69673



69663



69664



69656



69658



69669

## Blue Line wall brush - wing-nut fastening

| | Code | Standard Pack | Standard Weight in kg | Standard Volume in $m^3$ |
|---|---|---|---|---|
| Adjustable handle wall brush (48 cm) | **69656** | 12 | 2.5 | 0.04 |
| Fixed handle wall brush (50 cm) | **69658** | 12 | 3.9 | 0.04 |
| Multifunction manual brush | **69669** | 24 | - | - |

# MANUAL POOL CLEANERS - BLUE LINE RANGE






69665

## Blue Line leaf skimmer - wing-nut fastening

| | Code | Standard Pack | Standard Weight in kg | Standard Volume in m³ |
|---|---|---|---|---|
| Plastic flat leaf skimmer | **69665** | 12 | - | - |
| Plastic net leaf skimmer fixed handle | **69666** | 12 | - | - |
| Aluminium net leaf skimmer | **69667** | 12 | - | - |



69666



69667



69659 - 69660

## Blue Line handles - wing-nut fastening

| | Code | Standard Pack | Standard Weight in kg | Standard Volume in m³ |
|---|---|---|---|---|
| 1.8-3.6 m easy regulation aluminium handle | **69659** | 12 | - | - |
| 2.4-4.8 m easy regulation aluminium handle | **69660** | 12 | - | - |



69662

## Blue Line cleaning material wall bracket

| | Code | Standard Pack | Standard Weight in kg | Standard Volume in m³ |
|---|---|---|---|---|
| Cleaning material wall bracket | **69662** | 6 | - | - |



69668

## Blue Line floating dispenser

| | Code | Standard Pack | Standard Weight in kg | Standard Volume in m³ |
|---|---|---|---|---|
| Floating dispenser for 200g tablets | **69668** | 12 | - | - |

# MANUAL POOL CLEANERS - SHARK RANGE

## Shark pool cleaner - wing-nut or wishbone fixing

| | Code | Standard Pack | Standard Weight in kg | Standard Volume in m³ |
|---|---|---|---|---|
| Shark Flexo pool cleaner | **36618** | 6 | 9.9 | 0.04 |
| Shark Oval pool cleaner | **40997** | 5 | 6.4 | 0.04 |
| Shark Injected Aluminium pool cleaner | **41625** | 4 | 6.5 | 0.035 |
| Shark Triangular pool cleaner | **36619** | 4 | 5.2 | 0.04 |



**36618**



**40997**



**41625**



**36619**

## Shark brushes - wing-nut or wishbone fixing



**36615**



**36616**



**36617**

| | Code | Standard Pack | Standard Weight in kg | Standard Volume in m³ |
|---|---|---|---|---|
| Shark special bottom curved brush | **36615** | 10 | 3.7 | 0.04 |
| Shark bottom/walls curved brush | **36616** | 15 | 4.2 | 0.04 |
| Shark corner suction brush | **36617** | 12 | 2.4 | 0.04 |

## Shark leaf skimmers - wing-nut or wishbone fixing



**36613**



**36614**

| | Code | Standard Pack | Standard Weight in kg | Standard Volume in m³ |
|---|---|---|---|---|
| Shark water surface leaf skimmer | **36613** | 15 | 6.2 | 0.14 |
| Shark deep water leaf skimmer | **36614** | 15 | 6.5 | 0.14 |

## Shark telescopic pole - wing-nut or wishbone fixing



**38422 - 38423**

| | Code | Standard Pack | Standard Weight in kg | Standard Volume in m³ |
|---|---|---|---|---|
| Shark 1.8 - 3.6 m telescopic pole | **38422** | 10 | 11.7 | 0.05 |
| Shark 2.4 - 4.8 m telescopic pole | **38423** | 10 | 14.4 | 0.06 |

## Shark floating dispenser for 5 tablets



| | Code | Standard Pack | Standard Weight in kg | Standard Volume in m³ |
|---|---|---|---|---|
| Floating dispenser for 5 tablets 200 g Shark | **36620** | 1 | - | - |

## Shark submergible analogue thermometer



| | Code | Standard Pack | Standard Weight in kg | Standard Volume in m³ |
|---|---|---|---|---|
| Shark submergible analogue thermometer | **36622** | 10 | 2.8 | 0.04 |

CLASSIC ASTRALPOOL

# MANUAL POOL CLEANERS - CLASSIC RANGE

## Classic pool cleaner - wing-nut fastening



01355 - 01356

| | Code | Standard Pack | Standard Weight in kg | Standard Volume in m³ |
|---|---|---|---|---|
| Classic extruded aluminium pool cleaner 1 ½" connection 350 mm | **01355** | 4 | 10.2 | 0.04 |
| Classic extruded aluminium pool cleaner 2" connection 450 mm | **01356** | 4 | 12.2 | 0.06 |

## Classic brushes - wing-nut fastening



01405



01407



09456

| | Code | Standard Pack | Standard Weight in kg | Standard Volume in m³ |
|---|---|---|---|---|
| Classic PP bristle 330mm straight brush | **01405** | - | - | - |
| Classic S.S. bristle 165mm straight brush | **01407** | 20 | 9.0 | 0.018 |
| Classic PP bristle 180mm straight brush | **09456** | 14 | 6.1 | 0.177 |

## Classic brush holder - wing-nut fastening



| | Code | Standard Pack | Standard Weight in kg | Standard Volume in m³ |
|---|---|---|---|---|
| Classic water surface leaf skimmer with handle incorporated | **01400** | 1 | - | - |

## Classic fixed handle - wing-nut fastening



| | Code | Standard Pack | Standard Weight in kg | Standard Volume in m³ |
|---|---|---|---|---|
| Classic fixed handle 2.5 m | **01365** | 12 | 10.2 | 0.06 |

## Classic pool cleaner - wishbone fixing



01353-01354-08661

| | Code | Standard Pack | Standard Weight in kg | Standard Volume in m³ |
|---|---|---|---|---|
| **Extruded aluminium pool cleaner** | | | | |
| 1 ½" connection 350 mm | **01353** | 4 | 11.8 | 0.04 |
| 2" connection 450 mm | **01354** | 4 | 15.5 | 0.06 |
| 1 ½" connection 450 mm | **08661** | 4 | 15.5 | 0.06 |

## MANUAL POOL CLEANERS - CLASSIC RANGE

### Classic public pool aluminium pool cleaner - wishbone fixing


16601


01357


01358

| | Code | Standard Pack | Standard Weight in kg | Standard Volume in m³ |
|---|---|---|---|---|
| **Length: 800 mm** | | | | |
| Drag with cable (00210 not included) | **01357** | 1 | 13.0 | 0.03 |
| With nozzle | **16601** | 1 | 13.0 | 0.03 |
| **Length: 450 mm** | | | | |
| With nozzle 1 ½" - 2" connection | **01358** | 4 | 13.6 | 0.05 |

### Classic brushes - wishbone fixing


01406


01404

| | Code | Standard Pack | Standard Weight in kg | Standard Volume in m³ |
|---|---|---|---|---|
| PP bristle 330mm straight brush | **01406** | 1 | - | - |
| Bottom/walls curved brush | **01404** | 1 | - | - |
| Floating line brush | **11789** | 1 | - | - |

### Classic leaf skimmers - wishbone fixing


01398


01396

| | Code | Standard Pack | Standard Weight in kg | Standard Volume in m³ |
|---|---|---|---|---|
| Water surface leaf skimmer | **01398** | 1 | - | - |
| Deep water leaf skimmer | **01396** | 1 | - | - |

### Classic fixed handle - wishbone fixing



| | Code | Standard Pack | Standard Weight in kg | Standard Volume in m³ |
|---|---|---|---|---|
| Fixed handle 2.5 m | **01364** | 20 | 11.4 | 0.06 |

CLASSIC ASTRALPOOL

# MANUAL POOL CLEANERS - CLASSIC RANGE

## Shark telescopic pole - wing-nut or wishbone fixing



| | Code | Standard Pack | Standard Weight in kg | Standard Volume in m³ |
|---|---|---|---|---|
| Classic 1.8 - 3.6 m telescopic pole | **01359** | 12 | 13.4 | 0.05 |
| Classic 2.4 - 4.8 m telescopic pole | **01360** | 12 | 16.2 | 0.06 |

## Classic reinforced telescopic pole - Public pools



| **Reinforced telescopic pole, aluminium** | Code | Standard Pack | Standard Weight in kg | Standard Volume in m³ |
|---|---|---|---|---|
| 2.5 - 5 m | **01361** | 5 | 16.0 | 0.04 |
| 3.75 - 7.5 m | **15838** | 1 | 6.0 | 0.01 |
| 5 - 10 m | **01362** | 1 | 6.5 | 0.02 |
| 6.5 - 13 m | **01363** | 1 | 8.4 | 0.02 |

## Hose adapter



For connecting wing nut assembly to clip hose or clip assembly to wing nut hose.

| | Code | Standard Pack | Standard Weight in kg | Standard Volume in m³ |
|---|---|---|---|---|
| Adapts the wishbone handle connection to wing-nut connection | **08465** | 35 | 2.55 | 0.01 |
| Adapts the reinforced pole connection to wing-nut connection | **17937** | 38 | 2.66 | 0.01 |

## Hose adapter



For connecting wing nut assembly to clip hose or clip assembly to wing nut hose.

| | Code | Standard Pack | Standard Weight in kg | Standard Volume in m³ |
|---|---|---|---|---|
| Adapts the connection hose clip to wing nuts | **14592** | 48 | 3.36 | 0.01 |

## Thermometers



Celsius & Fahrenheit scale.

| | Code | Standard Pack | Standard Weight in kg | Standard Volume in m³ |
|---|---|---|---|---|
| | **20594** | 20 | 2.1 | 0.032 |

## ZOO floating thermometers



Celsius & Fahrenheit scale.

| | Code | Standard Pack | Standard Weight in kg | Standard Volume in m³ |
|---|---|---|---|---|
| Basic line. Desktop display. This includes: 6 models of each one: duck, dolphin, frog and whale | **66058** | 1 | 1.6 | 0.08 |
| Duck model | **38613** | 1 | 3.5 | 0.05 |
| Dolphin model | **58652** | 1 | 3.5 | 0.05 |
| Frog model | **58653** | 1 | 3.5 | 0.05 |
| Whale model | **58654** | 1 | 3.5 | 0.05 |






## NET'N'CLEAN INTEGRATED CLEANING SYSTEM

### NET 'N' CLEAN Integrated cleaning system

The NET'N'CLEAN is an efficient cleaning system, consisting of a six outlet distributor valve that receives clean water from the filter and distributes it sequentially to a series of nozzles installed on the pool floor.

This type of distribution from the bottom keeps the particles in suspension so they are collected by the skimmer and main drain and retained by the filter. It helps improve the use and efficacy of chemical products injected in the return piping and reduces heating costs by returning hot water along the bottom.

**INSTALLATION DIAGRAM**

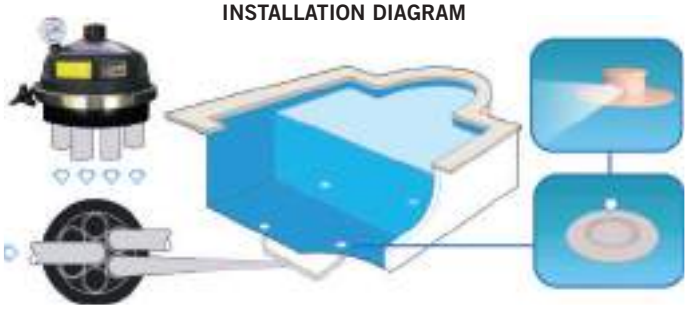



### Net'n'Clean distributor valve Ø 50 mm

Six way distribution valve. This valve is part of the Net'n'Clean cleaning system which is integrated in the pool floor. It distributes water sequentially through its various branches. Made of plastic and titanium it has high resistance to salt water. Maximum working pressure: 1.4 bars. Maximum flow: 15 m³/h. Connections: 7 x Ø 50 mm. 2 pop-up nozzles for branch recommended.

| | Code | Standard Pack | Standard Weight in kg | Standard Volume in m³ |
|---|---|---|---|---|
| Net'n'Clean distributor valve: European model | **21257** | 1 | 1.7 | 0.015 |



### Net'N'Clean distributor valve Ø 63 mm

Distributor valve optimized for greater hydraulic performance. Maximum working pressure of 1.8 bars. Maximum flow of 24 m³/h. Connections: 7 x Ø 63 mm or 7 x Ø 75 mm. From 2 to 4 nozzles per branch.

| | Code | Standard Pack | Standard Weight in kg | Standard Volume in m³ |
|---|---|---|---|---|
| Net'N'Clean distributor valve Ø 63 mm | **35079** | 1 | 5.6 | 0.031 |



### Net'N'Clean reducing wall conduit for nozzles

Reducing conduit to install concrete Net'N'Clean nozzles (26985). Made in white PVC. Ø 50 mm inside & Ø 63 mm outside connections.

| | Code | Standard Pack | Standard Weight in kg | Standard Volume in m³ |
|---|---|---|---|---|
| | **21248** | 12 | 7.3 | 0.032 |





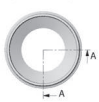

### Ø 90 mm wall conduit

PVC wall conduit. Cutting area of 120 mm for fitting it to the pool wall or floor. Ø 63 or Ø 75 connection, as required.

| | Code | Standard Pack | Standard Weight in kg | Standard Volume in m³ |
|---|---|---|---|---|
| Ø 90/Ø 63–Ø 75 mm wall conduit | **43590** | 9 | 7.3 | 0.033 |

For inlets:
Net'N'Clean: 43584 - 43585
BCN 03: 43586 - 43587 - 43588 - 43589
Return inlet/suction nozzle for high flow rates: 41518 - 41519 - 41520 - 41521

# NET'N'CLEAN INTEGRATED CLEANING SYSTEM


Concrete


Concrete


Fibreglass


Liner


65232

## Net'N'Clean nozzles

Range of Net'N'Clean nozzles with four different outlets. S4 is recommended for pool floor and S1 or S2 for steps. Designed for concrete pools with glass tiling, liner pools and polyester pools. For in-ground pools, both adjustable and fixed nozzles are available, and for liner pools there are self-tapping nozzles or nozzles with metal inserts.

| | Code | Standard Pack | Standard Weight in kg | Standard Volume in $m^3$ |
|---|---|---|---|---|
| **Nozzles** | | | | |
| **For concrete pools:** | | | | |
| With swivel joint | **26985** | 12 | 4.14 | 0.02 |
| Fixed | **26986** | 12 | 3.78 | 0.02 |
| **For polyester pools:** | | | | |
| Fixed | **21209** | - | - | - |
| **For liner pools:** | | | | |
| Fixed, with PN20 metal insert | **28500** | 12 | 5.05 | 0.034 |
| Adjustable, with INSERTS | **43584** | 12 | 5.64 | 0.033 |
| Adjustable, SELF-TAPPING | **43585** | 12 | 5.30 | 0.033 |
| **Bodies** | | | | |
| **For concrete pools:** | | | | |
| With swivel joint | **65230** | - | - | - |
| Fixed | **65231** | - | - | - |
| **For polyester pools:** | | | | |
| Fixed | **65232** | - | - | - |

May be supplied to order in the following colours: Sky blue, navy blue, speckled grey, metal grey and black.

## Inner assembly kit

Colours can be selected with the minimum number of parts. Existing pools can be renewed without any effort.


65234


65234CL090


65234CL129


65234CL144

| | Code | Standard Pack | Standard Weight in kg | Standard Volume in $m^3$ |
|---|---|---|---|---|
| **Inner assembly kit** | | | | |
| White | **65234** | 12 | 4.4 | 0.031 |
| Beige | **65234CL090** | 12 | 4.4 | 0.031 |
| Light grey | **65234CL129** | 12 | 4.4 | 0.031 |
| Anthracite grey | **65234CL144** | 12 | 4.4 | 0.031 |



Concrete

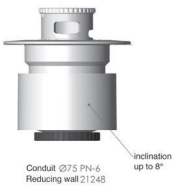




Liner

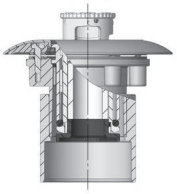



Polyester

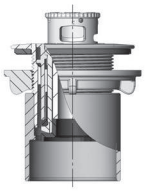



# HOSES



## Hose connectors

| | Code | Standard Pack | Standard Weight in kg | Standard Volume in m³ |
|---|---|---|---|---|
| Ø 38 mm for connections to inlets 16328, 16329, 16330, 21644, 21645, in white ABS | **05684** | 12 | 1.0 | 0.003 |
| Ø 50 mm connections to inlets 00315, grey PP | **01392** | 12 | 1.0 | 0.006 |



## Hose fitting

White ABS plastic.

| | Code | Standard Pack | Standard Weight in kg | Standard Volume in m³ |
|---|---|---|---|---|
| For Ø 38 mm hose, male thread 1½" | **01393** | 12 | 1.0 | 0.006 |



## Hose cuffs

| | Code | Standard Pack | Standard Weight in kg | Standard Volume in m³ |
|---|---|---|---|---|
| **Made in flexible blue PVC** | | | | |
| For Ø 38 mm (01372) hose Only for vac inlets 24415 | **07958** | 12 | 2.0 | 0.003 |
| For Ø 38 mm hose (01372) | **01385** | 12 | 2.0 | 0.003 |
| For Ø 50 mm hose (01373) | **01386** | 12 | 3.0 | 0.010 |
| **Made in flexible white PVC** | | | | |
| For Ø 38 mm hose (01374-01375 01376-01377-01378) | **01387** | 12 | 2.0 | 0.030 |
| For Ø 50 mm hose (01379) | **01388** | 12 | 3.0 | 0.010 |



## Floating suction hose

Transparent blue Polyethylene hose

| | Code | Standard Pack | Standard Weight in kg | Standard Volume in m³ |
|---|---|---|---|---|
| Ø 38 mm (1½") | **01372** | 30 m | 8.0 | 0.108 |
| Ø 50 mm (2") | **01373** | 30 m | 14.0 | 0.192 |



## Floating suction hose

Made of blue polyethylene. Includes terminals, except in the 30-m hose (01374, 01379).

| | Code | Standard Pack | Standard Weight in kg | Standard Volume in m³ |
|---|---|---|---|---|
| **Ø 38 mm (1½")** | | | | |
| 30 m | **01374** | 1 | 12.0 | 0.192 |
| 15 m | **01375** | 1 | 5.6 | 0.192 |
| 12 m | **01376** | 1 | 4.5 | 0.192 |
| 10 m | **01377** | 1 | 3.0 | 0.192 |
| 8 m | **01378** | 1 | 3.0 | 0.192 |
| **Ø 50 mm (2")** | | | | |
| 30 m | **01379** | 1 | 15.0 | 0.240 |



## Hose roller

For hoses of up to 15 metres.

| | Code | Standard Pack | Standard Weight in kg | Standard Volume in m³ |
|---|---|---|---|---|
| Hose roller | **66042** | 1 | 2.4 | 0.05 |





# POOL LIGHTING


236 • LED lighting - LumiPlus
248 • LED lighting - control systems
250 • Halogen lighting
254 • Niches
255 • Transformers and accessories
257 • Aquarmony underwater music system

## LED LIGHTING - LUMIPLUS



**AstralPool LumiPlus** is the most extensive family in the market of underwater spotlights for public, commercial and residential pools.

The entire LumiPlus range is made of high-quality LEDs and electronic components, and is manufactured entirely in the EU to European quality standards.

The AstralPool LumiPlus family delivers:

- Greater energy efficiency.
- High performance projectors with top quality lighting (TQL) technology.
- Enhanced energy efficiency in pools thanks to the use of LumiPlus DC lamps and projectors run from a direct current power source (24 V DC).
- Great control over the range with the inclusion of the Internet of Pools (IoP) concept by Fluidra Connect.
- IP68 protection rating.

The most comprehensive range for every type of pool

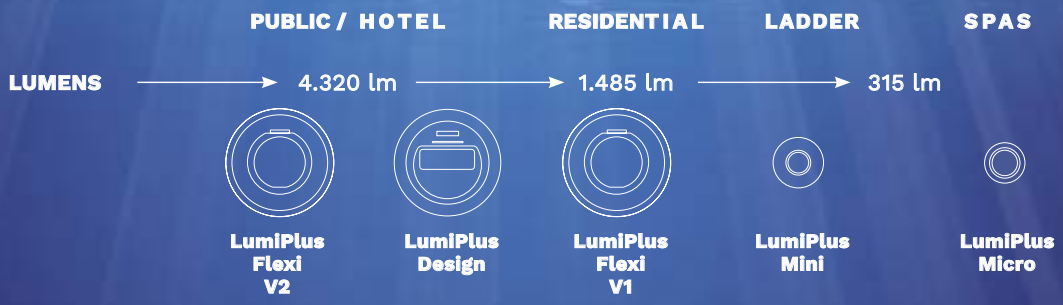

PROJECTOR

# LumiPlus Flexi

## The LED solution that adapts to every type of pool

The new LumiPlus projectors, FlexiNiche, FlexiSlim and FlexiRapid, are characterised by their more stylish finish and their great adaptability to any type of new-build or existing pool, whether a liner or concrete pool, that can be fitted to niches on the surface or in bushings.

**“AstralPool’s new LumiPlus Flexi system delivers top flexibility”**



WHITE ANTHRACITE GREY BEIGE LIGHT GREY

GARANTÍA 3 AÑOS YEARS GUARANTEE

GREEN FRIENDLY

PROJECTOR

# LumiPlus Flexi

## The LED solution that adapts to all types of pool




The new family of LumiPlus Flexi PROJECTORS, FlexiNiche, FlexiSlim and FlexiRapid, is characterized by its great adaptability to any type of new-build and existing liner or concrete pool and can be fitted in a niche, on the surface or to bushing.

Maximum flexibility with the new LumiPlus Flexi system by AstralPool.

Ideal for public/hotel pools and residential pools in version V2 and V1, respectively.

**LumiPlus Flexi is made up of 3 components**

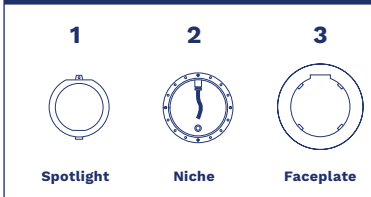


The 3 components are required for the proper installation of FlexiNiche and FlexiRapid.



LumiPlus FlexiNiche

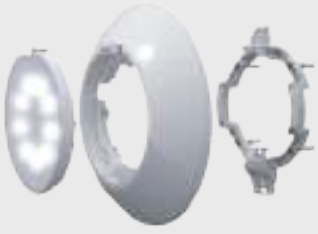

LumiPlus FlexiSlim



LumiPlus FlexiRapid

* Resistant to salt water

## LED LIGHTING - LUMIPLUS

### LumiPlus Flexi projectors - The LED solution that adapts to every type of pool

The new family of LumiPlus Flexi spotlights – FlexiNiche, FlexiSlim and FlexiRapid – is characterised by its great adaptability to any type of new-build or existing pool, whether a liner or concrete pool, that can be fitted to niches, on the surface or in bushings. The new LumiPlus Flexi system delivers top flexibility. Versions V1 and V2 are ideal for public/hotel pools and residential pools, respectively.

Note: To correctly light a pool, it is advisable to install a LumiPlus Flexi V1 for every 20m² of water surface or a LumiPlus Flexi V2 for every 25m² of water surface. Projectors should always be installed submerged in water.

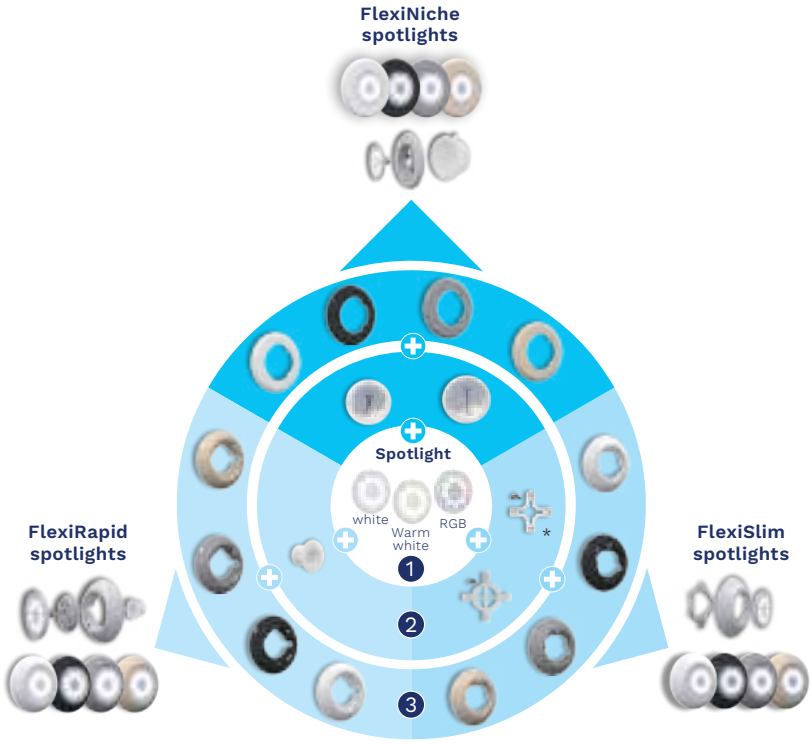


**Faceplate colours available:**
**white, Anthracite grey, light grey and beige**

| | LumiPlus FlexiNiche | LumiPlus FlexiSlim | LumiPlus FlexiRapid |
|---|---|---|---|
| **Type of installation** | Niche Ø180 - Ø230 | Walls | Inlet |
| **Ø of faceplate**<br>**Depth of faceplate** | 294 mm<br>20 mm | 290 mm<br>51 mm | 257 mm<br>48 mm |
| | 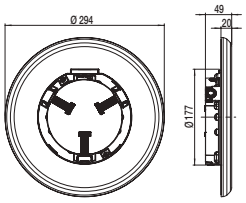 | 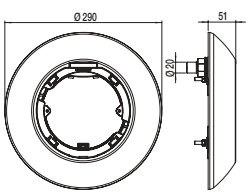 | 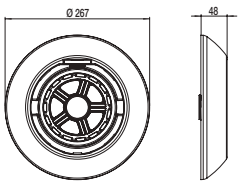 |

**How to install them?**

| LumiPlus FlexiNiche | LumiPlus FlexiSlim | LumiPlus FlexiRapid |
|---|---|---|
| LumiPlus FlexiNiche | LumiPlus FlexiSlim | LumiPlus FlexiRapid |

**LumiPlus Flexi LED configurator**

https://www.astralpool.com/configurador-led-lumiplus-flexi

*The models with RGB light are compatible with Fluidra Connect.*

*Seawater-proof.*

* Delivered with the front plate

## LED LIGHTING - LUMIPLUS

### LumiPlus Flexi projectors - Selection guide

Follow the steps below to choose the LumiPlus Flexi that best suits your pool:

**1 Select colour of light**

| | | Niche | | | | Walls | | | | Inlet | | | |
|---|---|---|---|---|---|---|---|---|---|---|---|---|---|
| | | RESIDENTIAL V1 White 1,485 lm/ RGB 1,100 lm | | PUBLIC/HOTEL V2 White 4,320 lm / RGB 2,544 lm | | RESIDENTIAL V1 White 1,485 lm / RGB 1,100 lm | | PUBLIC/HOTEL V2 White 4,320 lm / RGB 2,544 lm | | RESIDENTIAL V1 White 1,485 lm/ RGB 1,100 lm | | PUBLIC/HOTEL V2 White 4,320 lm / RGB 2,544 lm | |
| | | V1 - AC | V1 - DC | V2 - AC | V2 - DC | V1 - AC | V1 - DC | V2 - AC | V2 - DC | V1 - AC | V1 - DC | V2 - AC | V2 - DC |
| WHITE | | White 16W (24VA) | White 14W | White 32W (42VA) | White 32W | White 16W (24VA) | White 14W | White 32W (42VA) | White 32W | White 16W (24VA) | White 14W | White 32W (42VA) | White 32W (42VA) |
| WHITE | | Warm white 16W (24VA) | Warm white 14W | Warm White 32W (42VA) | Warm white 32W | Warm white 16W (24VA) | Warm white 14W | Warm White 32W (42VA) | Warm white 32W | Warm white 16W (24VA) | Warm white 14W | Warm White 32W (42VA) | Warm white 32W |
| RGB | | RGB 22W (29VA) | | RGB 43W (54VA) | | RGB 22W (29VA) | | RGB 43W (54VA) | | RGB 22W (29VA) | | RGB 43W (54VA) | |
| RGB | | Wireless 22W (29VA) | | RGB-DMX 43W (54VA) | | Wireless 22W (29VA) | | RGB-DMX 43W (54VA) | | Wireless 22W (29VA) | | RGB-DMX 43W (54VA) | |

**2 Select a model according to the type of installation**



Ø230 mm models



Ø180 mm models

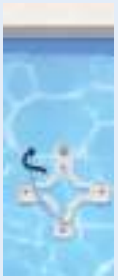



Compatible with the brackets for Flat, Extraflat and Slim projectors by AstralPool



FlexiSlim adapter for new-build pools



Any bushing with 1"½ internal thread

**3 Select faceplate colour**

FlexiNiche



WHITE ANTHRACITE GREY BEIGE LIGHT GREY

FlexiSlim



WHITE ANTHRACITE GREY BEIGE LIGHT GREY

FlexiRapid



WHITE ANTHRACITE GREY BEIGE LIGHT GREY

*All models with RGB light are compatible with Fluidra Connect.*

*Seawater-proof.*

**Power pack supplied with FLEXI DC spotlights**

Note: AC - Alternating current. DC - Direct current

## LED LIGHTING - LUMIPLUS

### LumiPlus Flexi projectors - Components required to install a LumiPlus Flexi

Choose from among the components according to your requirements:

- New-build pools - FlexiNiche or FlexiRapid: 1+2+3
- New-build pools - FlexiSlim: 1+3
- Replacement without changing niche: 1+3

### 1 SPOTLIGHT

| | | Code | Code |
|---|---|---|---|
| | | V1 | V2 |
|  | White AC LumiPlus Flexi spotlight | 71200 | 71233 |
| | White warm AC LumiPlus Flexi spotlight | 71200WW | 71233WW |
| | White DC LumiPlus Flexi spotlight | 71201 | 71202 |
| | White warm DC LumiPlus Flexi spotlight | 71201WW | 71202WW |
|  | RGB AC LumiPlus Flexi spotlight* | 71203 | 71204 |
| | Wireless AC LumiPlus Flexi spotlight* | 71205 | |
| | Wireless AC 1 PL LumiPlus Flexi spotlight + 1 Control Motion | 71206 | |
| | Wireless AC 2 PL LumiPlus Flexi spotlight + 1 Control Motion | 71207 | |
| | DMX RGB AC LumiPlus Flexi spotlight* | | 71208 |

All spotlights come with a 2.5 m power cable. Power cables of 5 m, 10 m and 15 m available on request.
* Choose the most suitable remote control (see control systems section)

### 2 NICHE

| | | Code | Code |
|---|---|---|---|
| | | NICHE Ø180 | NICHE Ø230 |
|  | Niche for concrete pools | 59813 | 00349 |
| | Niche for prefabricated pools with inserts | 59814 | 00364/17805/72261(1) |
| | Niche for prefabricated pools without inserts | 59815 | 28887 |
| | Niche for panel pools with inserts | | 23671 |
| | Niche for panel pools without inserts | | 23670 |
|  | **RAPID INLET** | | |
| | Inlet for concrete pools with 1 ½" threaded Ø63 PN-6 piping | | 35418 |
| | Inlet for concrete pools with 1 ½" threaded Ø63 PN-10 piping | | 35421 |
| | Inlet for liner prefabricated pools with 1 ½" thread | | 27084 |
| | Inlet for polyester prefabricated pools | | 38805 |

Other Ø230 and Ø180 niches also available (see catalogue).

### 3 TRIM

| | | Code |
|---|---|---|
| | **NICHE Ø230 - Ø180** | |
|  | White | 71209 |
| | Beige | 71209CL090 |
| | Light Grey | 71209CL129 |
| | Anthracite grey | 71209CL144 |
| | **SLIM** | |
|  | White | 71210 |
| | Beige | 71210CL090 |
| | Light Grey | 71210CL129 |
| | Anthracite grey | 71210CL144 |
| | **RAPID** | |
|  | White | 71211 |
| | Beige | 71211CL090 |
| | Light Grey | 71211CL129 |
| | Anthracite grey | 71211CL144 |

| SETS OF WHITE FACEPLATE + WHITE SPOTLIGHT | | Code | Code |
|---|---|---|---|
| | | WHITE AC | WHITE DC |
|  | Assembly with white faceplate + white FlexiNiche spotlight | 71212 | 71213 |
| | Assembly with white faceplate + white FlexiSlim spotlight | 71214 | 71215 |
| | Assembly with white faceplate + white FlexiRapid spotlight | 71216 | 71217 |
| | Kit FlexiNiche White + Vulcanized Kit (to convert to halogen to LED)* | 71212K* | |

AC - Alternating current  DC - Direct current  *The 2 components of the kit are delivered separatly (1) Parker screw

# LED LIGHTING - LUMIPLUS

## Projector Design

To correctly light a pool it is advisable to install a projector from the LumiPlus Design range every 25 m² of water surface.

Note: this recommendation applies to pools light in colour with white light spotlights, but if there are RGB spotlights more should be fitted. In dark or stainless steel pools it is recommended to use more projectors per m².

The Projector must always be installed underwater.

Projectors for installation in "Design" type niches (not included)

The RGB model is compatible with LumiPlus Eco, LumiPlus Top, LumiPlus LED APP and LumiPlus Modbus controls. The RGB DMX model requires the LumiPlus DMX 41107 modulator.



| Light Colour | Type of faceplate | | Consumption | Luminous flux |
|---|---|---|---|---|
| | White | Stainless steel effect | | |
| RGB DMX | 59811 | 59809 | 40W (55VA) | 2544 lm |
| White | 59807 | 59805 | 45W (50VA) | 4320 lm |
| RGB | 59803 | 59801 | 40W (55VA) | 2544 lm |

Rated voltage: 12V AC.

IPX8 protection.

Includes 2.5 m H07RN-F 2x1.5 mm² cable.

Adaptor kit available for other niche types from diameter 180 to 190 mm.

## Niches for projector Design



| Niches | | | |
|---|---|---|---|
| Concrete pool | Prefabricated pools | | Fixing kit for other niches |
| | With inserts | Without inserts | |
| 59813 | 59814 | 59815 | 59818* |

Compatible with: LumiPlus Design series.

*Compatible with the majority of niches from Ø180 to Ø190 mm on the market (Hugo Lahme, MTS Produckssts, Wibre...).

*Fluidra Connect-compatible if installed with the LumiPlus RGB modulator + Fluidra Connect module*

*Seawater-proof*

## LED LIGHTING - LUMIPLUS

### Stainless steel PAR56 projector – AISI-316

To correctly light a pool it is advisable to install a projector from the LumiPlus V1 range every 20m² of water surface or a LumiPlus V2 projector every 25m² of water surface. These recommendations are valid for light coloured pools and white light projectors; oversize in RGB colours, darker coloured pools or stainless steel pools. Projectors must always be installed underwater.
Supplied with cable duct with a PG 16 thread and PG16 to M25 converter.
**Niche not supplied - install with the 54102 stainless steel niche for concrete pools or the 54103 for liner/prefabricated pools.**
The RGB model is compatible with LumiPlus Eco, LumiPlus Top, LumiPlus app and LumiPlus Modbus controls.

| | Stainless steel PAR56 projector | | | | | | |
|---|---|---|---|---|---|---|---|
| | Light Colour | | Faceplate | | Consumption | Luminous flux | |
| | | | Ø 250 mm | Ø 295 mm | | | |
|  | RGB | V1 | 54094 | 54099 | 27W (37VA) | 1100 lm | **RGB:** Nominal voltage: 12V AC. IPX8 protection rating Includes 2.5 m H07RN-F 2x1.5 mm² cable. |
| | White DC | | 71659 | 71660 | 14 W | 1485 lm | **White: (AC lamp):** Nominal Voltage: 12V DC. Protection rating:IPX68 Includes: cable 2,5m H07RN-F 2x1,5mm². |
| | White AC | | 54095 | 54100 | 16 W (24VA) | 1485 lm | **White (DC lamp):** Nominal Voltage: 24V DC. Protection rating:IPX68 Includes: cable 2,5m H07RN-F 2x1,5mm². Includes 220 V AC-24 DC per pack. Does not work with 220V AC-12V AC electro-magnetic transformers. |
|  | RGB | V2 | 54092 | 54097 | 48W (64VA) | 2544 lm | |
| | white | | 71661 | 71662 | 32 W | 4320 lm | |

### Niche for stainless steel PAR56 projector

| | Niche | | |
|---|---|---|---|
| | Concrete pool | Prefabricated/liner pools | |
| | | With inserts | Without inserts |
|  | 54102 | 54103 | Compatible with: Stainless steel PAR56 range. |

# LED LIGHTING - LUMIPLUS

## LumiPlus lights for PAR56 V2 projectors

To correctly light a pool it is advisable to install a light from the LumiPlus V2 range every 25 m² of water surface.

Note: this recommendation applies to pools light in colour with white light spotlights, but if there are RGB spotlights more should be fitted. In dark or stainless steel pools it is recommended to use more projectors per m². The RGB model is compatible with LumiPlus Eco, LumiPlus Top, LumiPlus LED APP and LumiPlus Modbus controls. The RGB DMX model requires the LumiPlus DMX 41107 modulator.



| DC PAR56 V2 lamp | | | | | |
|---|---|---|---|---|---|
| Light Colour | | Code | Consumption | Light intensity | |
| White | | 67516 | 32W | 4.320 lm | Rated voltage: 24 V DC. Protection rating: IPX8.<br>Includes 220V AC - 24 V DC power pack.<br>Does not work with 220 V AC-12 V AC electromagnetic transformers.<br>It must always be installed underwater. |
| Warm white | | 67516WW | | | |



| PAR56 V2 light | | | | |
|---|---|---|---|---|
| Light Colour | Code | Consumption | Light intensity | |
| RGB | 43411 | 48W (64VA) | 2.544 lm | Rated Voltage: 12V AC.<br>Protection: IPX8.<br>Cable not included.<br>It must always be installed underwater. |
| RGB DMX | 45637 | 48W (64VA) | 2.544 lm | |

## LumiPlus lights for PAR56 V1 projectors

To correctly light a pool it is advisable to install a light from the LumiPlus V1 range every 20m² of water surface.

Note: this recommendation applies to pools light in colour with white light spotlights, but if there are RGB spotlights more should be fitted. In dark or stainless steel pools it is recommended to use more projectors per m².



| DC PAR56 V1 lamp | | | | | |
|---|---|---|---|---|---|
| Light Colour | | Code | Consumption | Light intensity | |
| White | | 67515 | 14W | 1.485 lm | Rated voltage: 24V DC. Protection rating: IPX8.<br>Includes 220V AC - 24 V DC power pack.<br>Does not work with 220 V AC-12 V AC electromagnetic transformers.<br>It always has to be installed submerged in water. |
| Warm white | | 67515WW | | | |



| PAR56 V1 light | | | | | |
|---|---|---|---|---|---|
| Light Colour | | Code | Consumption | Light intensity | |
| White | | 52596 | 16W (24VA) | 1.485 lm | Rated Voltage: 12V AC.<br>Protection: IPX8.<br>Cable not included.<br>It always has to be installed submerged in water. |
| Warm white | | 52596WW | | | |
| RGB | | 56001 | 27W (37VA) | 1.100 lm | |



| Wireless PAR56 V1 light | | | | | | |
|---|---|---|---|---|---|---|
| | 1 light + 1 Control Motion | 2 lights + 1 Control Motion | 1 lamp RGB 1.11 Wireless | Consumption per lamp | Luminous flux per lamp | |
| | 59126 | 59127 | 59124 | 27W (37VA) | 1.100 lm | Rated voltage: 12V AC.<br>Protection rating: IPX8.<br>Cable not included.<br>Must always be installed underwater.<br>The LumiPlus Control Motion remote control is not waterproof. |
| | Pack of 8 boxes with 2 lams + Control Motion with their respective display stands | | | | | |
| | 59127K | | | | | |

*Fluidra Connect-compatible if installed with the LumiPlus RGB modulator + Fluidra Connect module*

*Seawater-proof*

# LED LIGHTING - LUMIPLUS

## LumiPlus MINI V3 projectors

Range of projectors to be integrated in the pool. Very easy to install. Suitable for installation in bushings, connector inlets, niches and spas. Available in white and stainless steel effect finish. Manufactured with IMD (in-mould decoration) technology.

The RGB model is compatible with LumiPlus Eco, LumiPlus Top, LumiPlus LED APP and LumiPlus Modbus controls. The RGB DMX model requires the LumiPlus DMX 52142 feed controller (see page 280-281). The RGB projector can be installed with the 27818 modulator and control a power charge of up to 900VA.



| MINI V3 projector | | | | | | | |
|---|---|---|---|---|---|---|---|
| Colour | Faceplate | Concrete | Prefabricated/ Liner | SPAS | Consumption | Light | |
| RGB | white | 59971 | 69633 | 59973 | 4 W (6 VA) | 186 lm | Rated Voltage: 12V AC (RGB & White) 24V DC (RGB-DMX) IPX8 protection. 2.5 m H07RN-F 2 x 1 mm² cable. Must be installed submerged in water. The RGB model is compatible with all LumiPlus control devices. |
| | Stainless steel effect | 59972 | 69634 | 59974 | | | |
| RGB DMX | white | 59975 | 69635 | 59977 | 4 W (4 VA) | 186 lm | |
| | Stainless steel effect | 59976 | 69636 | 59978 | | | |
| White | white | 59979 | 69637 | 59981 | 4 W (7 VA) | 315 lm | |
| | Stainless steel effect | 59980 | 69638 | 59982 | | | |

## Niches for LumiPlus MINI V3 and LumiPlus FlexiRapid projectors

| Niches for LumiPlus MINI V3 | | | | | | |
|---|---|---|---|---|---|---|
| Concrete pools | | | | Prefabricated pools | | |
| | | | | Liner | | Fibreglass |
| Bushing / Tube ø63 PN-6 / PN-10 | 1"½ threaded inlet Ø 63 PN-6 piping | 1"½ threaded inlet Ø 63 PN-10 piping | Niche | 1 ½" thread inlet | Niche | Inlet |
| 62395 | 35418 | 35421 | 53956 | 27084 | 59983 | 38805 |
|  |  |  |  |  |  |  |

*Fluidra Connect-compatible if installed with the LumiPlus RGB modulator + Fluidra Connect module*

*Seawater-proof*

# LED LIGHTING - LUMIPLUS

## LumiPlus MINI V2 projectors

To correctly light a pool it is advisable to install a projector from the LumiPlus Mini V2 range every 5 m² of water surface. NB: recommendations valid for light coloured pools and white light projectors; oversize in RGB colours. In darker coloured pools or stainless steel pools, we recommend oversizing the proportion of projectors per m².
Projectors may be installed both in and out of the water. Niche according to model; not included and needed to finish the installation. The RGB model is compatible with LumiPlus Eco, LumiPlus Top, LumiPlus LED APP and LumiPlus Modbus controls. The RGB DMX model requires the LumiPlus DMX 52142 feed controller (see page 249). The RGB projector can be installed with the 27818 modulator and control a power charge of up to 900VA.

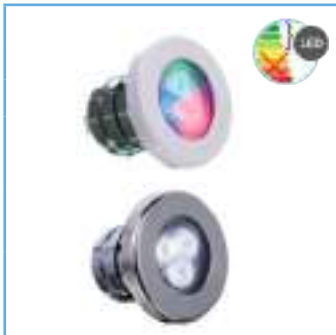

| Snap-in MINI V2 projector | | | | |
|---|---|---|---|---|
| Light Colour | Type of faceplate | | Consumption | Light |
| | white | S.S. | | |
| RGB | 52124 | 52125 | 4W (7VA) | 186 lm |
| White | 52130 | 52131 | 4W (6VA) | 315 lm |
| RGB DMX | 52136 | 52137 | 4W (4VA) | 186 lm |

Rated Voltage: 12V AC (RGB & White) 24V DC (RGB-DMX)
IPX8 protection.
Includes 2.5 m H07RN-F 2x1.5 mm² cable.
May be installed both in and out of the water.
Compatible with a 63 bushing (code 15661) or snap-in mini niche (not included) code 53596. Select the appropriate option for each pool (see page 254).

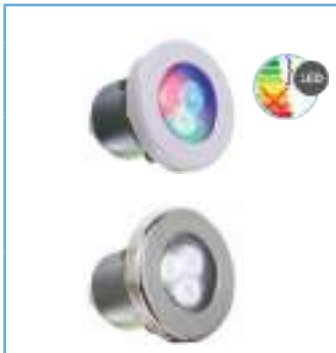

| MINI V2 projector for SPA and prefabricated pool | | | | |
|---|---|---|---|---|
| Light Colour | Type of faceplate | | Consumption | Light |
| | white | S.S. | | |
| RGB | 52126 | 52127 | 4W (7VA) | 186 lm |
| White | 52132 | 52133 | 4W (6VA) | 315 lm |
| RGB DMX | 52138 | 52139 | 4W (4VA) | 186 lm |

Rated Voltage: 12V AC (RGB & White) 24V DC (RGB-DMX)
IPX8 protection.
Includes 2.5 m H07RN-F 2x1.5 mm² cable.
Fastened between a threaded bolt and 2" nut.



| MINI V2 projector for Mini Niche (light point) | | | | |
|---|---|---|---|---|
| Light Colour | Type of faceplate | | Consumption | Light |
| | white | S.S. | | |
| RGB | 52128 | 52129 | 4W (7VA) | 186 lm |
| White | 52134 | 52135 | 4W (6VA) | 315 lm |
| RGB DMX | 52140 | 52141 | 4W (4VA) | 186 lm |

Rated Voltage: 12V AC (RGB & White) 24V DC (RGB-DMX)
IPX8 protection.
Includes 2.5 m H07RN-F 2x1.5 mm² cable.
Compatible with mini niche (not included). Select the appropriate option for each pool (see page 254).



| | Beige | Light grey | Anthracite |
|---|---|---|---|
| Color front plate for Snap-in MINI V2 projector and MINI V2 projector for SPA and prefabricated pool | 08554-0500CL090 | 08554-0500CL129 | 08554-0500CL144 |
| Color front plate for MINI V2 projector for Mini Niche (light point) | 04582-0500CL090 | 04582-0500CL129 | 04582-0500CL144 |

*Fluidra Connect-compatible if installed with the LumiPlus RGB modulator + Fluidra Connect module*

## LED LIGHTING - LUMIPLUS

### LumiPlus MICRO projectors

To illuminate a pool properly, it is recommended that a spotlight from the LumiPlus Micro family be installed for every 5 m² of water surface.
Note: this recommendation applies to pools light in colour with white light spotlights, but if there are RGB spotlights more should be fitted. In dark or stainless steel pools it is recommended to use more projectors per m².
The RGB model is compatible with LumiPlus Eco, LumiPlus Top, LumiPlus app and LumiPlus Modbus controls.
The RGB DML model is compatible with the LumiPlus DMX 52142 feed controller (see page 249).



| Fast assembly MICRO lights | | | | | |
|---|---|---|---|---|---|
| Light Colour | Type of faceplate | | Consumption | Light | |
| | White | S.S. | | | |
| RGB | 64552 | 64553 | 4W (7VA) | 186 lm | Rated Voltage: 12V AC (RGB & White) 24V AC (RGB-DMX)<br>Protection: IPX8.<br>Cable:<br>2,5 m. H07RN-F section 2x1,5 mm².<br>It is possible to be installed inside or outside the water. |
| White | 38814 | 38816 | 6W (9VA) | 315 lm | |
| RGB DMX | 64557 | 64558 | 4W (4VA) | 186 lm | |



| MICRO lights for SPA and prefabricated pool | | | | | |
|---|---|---|---|---|---|
| Light Colour | Type of faceplate | | Consumption | Light | |
| | White | S.S. | | | |
| RGB | 64554 | 64555 | 4W (7VA) | 186 lm | Rated Voltage: 12V AC (RGB & White) 24V AC (RGB-DMX)<br>Protection: IPX8.<br>Cable:<br>2,5 m. H07RN-F section 2x1,5 mm².<br>It is possible to be installed inside or outside the water. |
| White | 40765 | 40766 | 6W (9VA) | 315 lm | |
| RGB DMX | 64559 | 64560 | 4W (4VA) | 186 lm | |

Models with various existing light points as well.

### Outdoor lighting - Brick Light Series projector



| Brick Light Series lights | | | | | |
|---|---|---|---|---|---|
| Light Colour | | | | Consumption | |
| RGB | | white | | | |
| Square | Round | Square | Round | | |
| 45716 | 45717 | 57089 | 57090 | 4W (6VA) | Rated voltage: 12 V AC.<br>Protection rating: IPX8.<br>Includes 2.5-m H07RN-F cable 2 x 1.5 mm².<br>The spotlight has a galvanized steel niche for easy installation. |



### Outdoor lighting - Starlight portable lights

Decorative lights for indoors and out and even for floating in the water. Includes a remote control for choosing one of the 16 different colours available. They work on low consumption LED technology and once the battery has been charged have a runtime of up to 20 hours. Starlight is water-resistant The charger is supplied with the product.

| | Code | Standard Pack | Standard Weight in kg | Standard Volume in m³ |
|---|---|---|---|---|
| **StarLight Altair**<br>Conical shape 290 x 320 mm | **53937** | 1 | 3 | 0.050 |
| **StarLight Sirio**<br>Circle shape Ø 350 mm | **53938** | 1 | 3 | 0.051 |
| **StarLight Vega**<br>Oval shape 350 x 270 mm | **53939** | 1 | 3 | 0.051 |

## LED LIGHTING - CONTROL SYSTEMS

| System | | | Codes | Description | Projectors |
|---|---|---|---|---|---|
| **LumiPlus RGB ECO** | |  | **32458** | **The simplest and most economical colour change system.**<br>LumiPlus Eco is a push-button switch that allows 14 modes of operation: 7 fixed colours and 7 different colour sequences.<br>Each time the push button is pressed, the colour or sequence will change. By pressing for several seconds, the light is white.<br>The push button must be sized to withstand the power consumed by the number of lights in the facility.<br>Maximum charge 700 VA. Must be connected in the transformer primary. | Any LumiPlus RGB projector. |
| **LumiPlus WIRELESS** | **LumiPlus Control Motion** |  | **59125** | **Colour change CONTROL in your hand.**<br>The LumiPlus Control Motion remote control enables wireless projector control, directly offering on/off options, 12 colour changes, 8 sequence changes and sequence speed.<br>It also detects movement, letting you activate colours and sequences by vertical and horizontal movements, respectively.<br>Compatible with the LumiPlus Wireless range of projectors only.<br>Can control 2 wireless projectors. | Flexi V1 RGB Wireless<br>PAR56 V1 RGB Wireless |
| | **LumiPlus Wireless Range Extender** |  | **64633** | Allows expansion of the signal that the LumiPlus Control Motion sends to the projectors with the wireless control system.<br>Ideal for facilities whose architectural features or projectors installation makes it hard for the LumiPlus Control Motion signal to reach the wireless projectors properly. | |
| **LumiPlus RGB TOP** | |  | **27818 + 41988** | **The LumiPlus TOP system for the remote control of pool colour changes.**<br>System comprising the 27818 modulator and 41988 remote control that enables the control of a large number of projectors. The modulator has an antenna with a 50m range to receive the signal from the remote control (bought separately).<br>The LumiPlus TOP system enables:<br>• Projector on/off action.<br>• Colour selection: 12 fixed colours available.<br>• Sequence selection: 8 sequences available.<br>• Sequence speed selection: 8 speeds available for each sequence.<br>Supplied separately. A total of 10 LumiPlus modulators can be synchronized. | Any LumiPlus RGB projector. |
| **LumiPlus LED APP LumiPlus WIFI** | **Existing installation** |  | **59131** | **Control your pool lighting from your smartphone.**<br>App to check LumiPlus lights and projectors from an Android or iOS smartphone or tablet.<br>If the pool has a LumiPlus 27818 modulator, you can control your LumiPlus lights or spotlights from your smartphone or tablet just by installing the LumiPlus Wi-Fi access point together with the modulator. The LumiPlus app should only be installed as an additional feature to the LumiPlus Modulator. It offers a range of 12 colours and 8 sequences or colour change programs.<br>Free app you can download directly from the following sites:<br>Apple: www.lumiplusled-ios.astralpool.com<br>Android: www.lumiplusled-android.astralpool.com<br>Available on the App Store<br>Google play<br>  | Any LumiPlus RGB projector |
| | **New installation** |  | **59132** | | |

## LED LIGHTING - CONTROL SYSTEMS

| System | | | Codes | Description | Projectors |
|---|---|---|---|---|---|
| LumiPlus Modbus FLUIDRA CONNECT | | | | **Control your pool lighting anywhere, anytime.** | |
| | Existing installation |  | 57434 | The Modbus protocol enables the control of the LumiPlus modulator. It can be used to switch the projectors on and off, change their colours and sequence speed and set the time for putting the projectors in sleep mode.<br>Download the Fluidra Connect app for instant information about the state of your pool 365 days a year. Fluidra Direct is peace of mind, comfort and leisure. In addition to controlling projectors, LumiPlus lets you control the filtration, water treatment and more of your pool through the Modbus protocol.<br>The LumiPlus Modbus should only be installed as an additional feature to the LumiPlus 27818 modulator for correct installation and operation. | Any LumiPlus projector |
| | New installation |  | 57435 | | |
| LumiPlus RGB DMX | | | | **System to prepare lighting scenes for fountains and large aquatic spaces** | |
| | RGB DMX Modulator |  | 41107 | DMX LED projector modulator/12V AC<br>• DMX receiver for the Flexi, PAR56, S-LIM and Design ranges.<br>• Receiving orders from the DMX controller (Astral DMX 41329 or Astral DMX Pro 41330) via the DMX bus and acting on the projectors that are connected. | Any LumiPlus RGB-DMX projector |
| | RGB-DMX power pack |  | 52142 | Product designed exclusively for use with V2 and V3 Mini LED and RGB DMX Micro projectors.<br>The power pack can control up to 9 projectors, receiving orders from the system's DMX controller (Astral DMX 41329 or Astral DMX Pro 41330) via the DMX bus and acting on the projectors that are connected.<br>The power pack has been designed to be used solely with DMX protocol and 24V DC DMX controllable parts from AstralPool. | |
| | DMX controller |  | 41329 | System that makes it possible to single out lights individually or by groups.<br>Total control for fountain lighting by means of a PC or through a programmable, autonomous module.<br>Includes the Astral DMX module (USB-DMX interface) and intuitive software, giving users full control over a projector or group of projectors.<br>Makes it possible to choose a desired colour from among more than 16 million colours.<br>This system is the ideal solution for creating practically indefinite scenes with spectacular results.<br>System advantages/benefits:<br>• Very accurate (and coordinated) control over the lights (light and intensity control).<br>• Supports a lot of equipment, operating independently or combined.<br>• Great versatility to form sequences.<br>• The AstralPool DMX system does not require any additional wiring for projectors with PAR 56 lights. | |
| | DMX PRO controller |  | 41330 | | |

# HALOGEN LIGHTING

## Standard light

All plastic materials. PAR56 300W 12V AC halogen lamp.

**For correct pool lighting, we recommend: one projector per 25-30 m² of pool area.**
Note: This recommendation is valid for light coloured pools. For pools in dark colours or stainless steel, we recommend a higher proportion of projectors per m².

The projector must be always be submerged in water.

**Projectors for installation in "standard" niche (included).**



| Standard light | | | | | | | |
|---|---|---|---|---|---|---|---|
| Energy eff. | Type of pool | Cable 2x6 mm² 2.5 m | Type of faceplate Ø280 mm | | Consumption | Niche included | |
| | | | ABS | S.S. | | | |
| C | Concrete | Yes | 07844 | 07843 | 300W (300 VA) | Yes | Rated voltage: 12 V AC.<br>Protection rating: IPX8.<br>Compatible with standard niches (included). |
| | | No | 07838 | 07837 | | | |
| | Prefabricated | Yes | 07856 | 07855 | | | |
| | | No | 07852 | 07851 | | | |

## Global light

Made of plastic with hardware and anchoring system also made of plastic. Suitable for sea water.

Model based on standard projector. PAR56 300W 12V AC halogen lamp.

For correct pool lighting, we recommend one projector per 25-30 m² of pool area.
Note: This recommendation is valid for light coloured pools. For pools in dark colours or stainless steel, we recommend a higher proportion of projectors per m².

The projector must be always be submerged in water.

Compatible with AstralPool niches (not included) or any niche available on the market with interior diameters ranging between 220 mm and 235 mm (e.g.: Standard model and PS model).

For full projector assembly, the niche must be purchased separately (see page 254).



| Global light | | | | | | | |
|---|---|---|---|---|---|---|---|
| Energy eff. | Type of pool | Cable 2x6 mm² 2.5 m | Type of faceplate Ø280 mm | | Consumption | Niche included | |
| | | | ABS | S.S. | | | |
| C | All depending on the niche | Yes | 52608 | - | 300W (300 VA) | No | Rated voltage: 12 V AC.<br>Protection rating: IPX8.<br>Compatible with standard and PS niches (not included). |

*Seawater-proof*

# HALOGEN LIGHTING

## Stainless Steel light

Range of projectors made entirely from AISI-316 stainless steel. Supplied with a 2.5 m cable with a PG16 thread and PG16 to M25 converter.

Incandescent PAR56 300 W 12 V AC lamp.

Lamp fastens to niche with screws.

**For correct pool lighting, we recommend: one projector per 25-30 m² of pool area.**
Note: This recommendation is valid for light coloured pools. For pools in dark colours or stainless steel, we recommend a higher proportion of projectors per m².

The projector must be always be submerged in water.

**Projectors must be installed in stainless steel niche (not included).**



| Stainless Steel light | | | | | | | |
|---|---|---|---|---|---|---|---|
| Energy eff. | Type of pool | 2x6 mm² 2.5 m cable | S.S. faceplate size | | Consumption | Niche included | Rated voltage: 12 V AC.<br>Protection rating: IPX8.<br>Compatible with stainless steel niches (not included). |
| | | | Ø250 mm | Ø295 mm | | | |
| C | All depending on the niche | Yes | **54096** | **54101** | 300W (300 VA) | No | |

# HALOGEN LIGHTING

## Mini light

Small underwater projector. GX-5.3 50W 12V AC aluminized halogen lamp.

For correct pool lighting, we recommend one projector per 10 m² of pool area.
Note: This recommendation is valid for light coloured pools. For pools in dark colours or stainless steel, we recommend a higher proportion of projectors per m².

The projector must be always be submerged in water.

**Projectors for installation in bushings or niche, depending on model (not included).** To complete the installation the right housing should be purchased for each type of pool (see page 254).



| Fast assembly Mini light | | | | | | |
|---|---|---|---|---|---|---|
| Energy eff. | Body | Type of faceplate Ø96 mm | | Consumption | Fixing | |
| | | ABS | S.S. | | | |
| C | Plastic | 33708 | - | 50W (50 VA) | Ø63 wall conduit or Fast assembly Mini Niche | Rated voltage: 12V AC.<br>IPX8 protection.<br>Includes 2.5 m H07RN-F 2 x 1.5 mm² cable.<br>Compatible with a 63 bushing (code 15661) or snap-in mini niche (not included). Select the appropriate option for each pool (see page 254). |
| | Metal | 33684 | - | | | |



| Mini light for Spa and prefabricated pool | | | | | | |
|---|---|---|---|---|---|---|
| Energy eff. | Body | Type of faceplate Ø96 mm | | Consumption | Fixing | |
| | | ABS | S.S. | | | |
| C | Plastic | 33709 | 36647 | 50W (50 VA) | Threaded body and 2" nut | Rated voltage: 12 V AC.<br>Protection rating: IPX8.<br>Includes 2.5-m H07RN-F 2 x 1.5 mm² cable. |
| | Metal | 33685 | 36642 | | | |



| Mini light for Mini Niche (Light spot) | | | | | | | |
|---|---|---|---|---|---|---|---|
| Energy eff. | Body | Type of faceplate Ø96 mm | | Consumption | Fixing | Niche included | |
| | | ABS | S.S. | | | | |
| C | Plastic | 49820 | 49821 | 50W (50 VA) | Mini niche | No | Rated voltage: 12V AC.<br>IPX8 protection.<br>Includes 2.5 m H07RN-F 2 x 1.5 mm² cable.<br>Compatible with mini niche (not included). Select the appropriate option for each pool (see page 254) |
| | Metal | 49822 | 49823 | | | | |

# HALOGEN LIGHTING

## PS light

Plastic construction. PAR56 300W 12V AC halogen lamp.

For correct pool lighting, we recommend one projector per 25 $m^2$ of pool area.
Note: This recommendation is valid for light coloured pools. For pools in dark colours or stainless steel, we recommend a higher proportion of projectors per $m^2$.

The projector must be always be submerged in water.

Projectors for installation in PS niches (included).



| PS light | | | | | | | |
|---|---|---|---|---|---|---|---|
| Energy eff. | Type of pool | Cable 2x6 $mm^2$ 2.5 m | Type of faceplate Ø280 mm | | Consumption | Niche included | |
| | | | ABS | S.S. | | | |
| C | Concrete | Yes | **07846** | **07845** | 300W (300 VA) | Yes | Rated voltage: 12 V AC.<br>Protection rating: IPX8.<br>Compatible with PS niches (included). |
| | | No | **07833** | **07831** | | | |
| | Prefabricated | Yes | **07857** | **07858** | | | |
| | | No | **07847** | **07850** | | | |

## Lamps for lights



| Lamps for lights | | | | |
|---|---|---|---|---|
| Energy eff. | Type of lamp | | Code | Consumption |
| C | Halogen PAR56 | For lights with niche | **00370** | 300W (12 V) |
| C | Dichroic GX-5.3 | For mini lights | **19334** | 50W (12 V) |

# NICHES

## Niches



| Standard niches | | | | | |
|---|---|---|---|---|---|
| Concrete pool | Prefabricated pools | | Panels pool | | |
| | With inserts | Without inserts | With inserts | Without inserts | |
| 00349 | 00364 | 28887 | 23671 | 23670 | Compatible with: **LumiPlus PAR56** series, **Standard halogen** lights and **Global**. |
| | 17805 | | | | |



| AISI-36 stainless steel niches | | |
|---|---|---|
| Concrete pools | Liner swimming pool | |
| 54102 | 54103 | Compatible with: **LumiPlus stainless steel** range, **stainless steel** incandescent projectors. |



| PS niches | | | |
|---|---|---|---|
| Concrete pool | Prefabricated pools | | |
| | With inserts | Without inserts | |
| 00355 | - | 00367 | Compatible with: **PS** halogen lights series and **Global**. |



| MINI niches | | | |
|---|---|---|---|
| Concrete pool | Prefabricated pools | Panel pools | |
| 06967 | 00369 | 49828 | Compatible with: **LumiPlus Mini 2.11** series and **Mini halogen lights for niche**. |



| Fast assembly MINI niches | | |
|---|---|---|
| Concrete pools | Prefabricated pools | |
| 53956 | 59983 | **53956**: Compatible with the **LumiPlus Mini 2.11, LumiPlus Mini 3.13, LumiPlus Rapid** and **Mini halogen snap-in ranges**.<br>**59983**: Compatible with the **LumiPlus Mini 3.13** and **LumiPlus Rapid** ranges. |

## Niches for projector DESIGN and also compatibles with LumiPlus FlexiNiche



| Niches | | | | |
|---|---|---|---|---|
| Concrete pool | Prefabricated pools | | Fixing kit for other niches | |
| | With inserts | Without inserts | | |
| 59813 | 59814 | 59815 | 59818* | Compatible with: **LumiPlus Design** series.<br>*Compatible with the majority of niches from Ø180 to Ø190 mm on the market (Hugo Lahme, MTS Produckssts, Wibre...). |

*Seawater-proof*

# TRANSFORMERS AND ACCESSORIES



**More compact**
**More functional**
**Specially designed for lighting up fountains and pools.**

## Transformers for pool and fountain lighting

- Compact design.
- Suitable for all types of circuit board.
- Quick and easy installation.
- Connection via terminals protected against indirect contacts.
- Up to 40 m between the spotlight and transformer.
- Made in compliance with Standard UNE-EN-61558-2-6.
- IP-20 protection rating.
- Age-resistant housing.

| | Code | Standard Pack | Standard Weight in kg | Standard Volume in $m^3$ |
|---|---|---|---|---|
| 100 VA 230 V to 12 V transformer | **00383-1369** | - | - | - |
| 300 VA 230 V to 12 V transformer | **00384-1369** | - | - | - |
| 600 VA 230 V to 12 V transformer | **00385-1369** | - | - | - |



## Transformers

Made in compliance with standard EN 60742.

| | Code | Standard Pack | Standard Weight in kg | Standard Volume in $m^3$ |
|---|---|---|---|---|
| **130VA from 230V to 12V** | **00383-4146** | 6 | 15.0 | 0.011 |
| **300VA from 230V to 12V** cable length up to 35 m | **71436** | 4 | 21.0 | 0.012 |
| **600VA from 230V to 12V** cable length up to 25 m | **00385-4146** | 2 | 19.0 | 0.012 |

Alternative transformer range, on enquiry.



## Encapsulated security transformer with IP-65 protection rating for pools

Manufactured according to the rules UNE-EN 61558 and directive CE.
- Bodywork has IP-657 protection rating.
- Class II transformer. Total protection against all electric shocks.
- Self-extinguishing bodywork, as per IEC 695-2-1
- Frequency of 50–60 Hz.

| | Code | Standard Pack | Standard Weight in kg | Standard Volume in $m^3$ |
|---|---|---|---|---|
| 130 VA from 220-240 V to 12 V | **35807** | 1 | 3.2 | 0.02 |
| 400 VA from 220-240 V to 12-17 V | **35385** | 1 | 6.8 | 0.04 |
| 800 VA from 280-240 V to 12-17 V | **35386** | 1 | 10.4 | 0.04 |



## Transformer protection boxes

Made of zinc plated steel plate, painted finish.

| | Code | Standard Pack | Standard Weight in kg | Standard Volume in $m^3$ |
|---|---|---|---|---|
| For transformer 00383 | **00386** | 1 | 1.15 | 0.01 |
| For transformer 00384 | **00387** | 1 | 1.57 | 0.01 |
| For transformer 00385 | **00388** | 1 | 3.00 | 0.01 |

# TRANSFORMERS AND ACCESSORIES



## Connection box with security cover

Manufactured in ABS, made up of three ¾" inlets/outlets M-25 and ¾" thread connections.

| | Code | Standard Pack | Standard Weight in kg | Standard Volume in $m^3$ |
|---|---|---|---|---|
| Standard version | **30825** | 12 | 4.65 | 0.030 |



## Connection box

In AISI-316 stainless steel. Two PG 15 thread side outlets with two PG16 to M25 converters. ¾" BSP threaded bottom connection.

| Code | Standard Pack | Standard Weight in kg | Standard Volume in $m^3$ |
|---|---|---|---|
| **00393** | 1 | 0.21 | 0.002 |



## Flexible conduit hose

For connection from light to connection box, length 1 m hose.

| | Code | Standard Pack | Standard Weight in kg | Standard Volume in $m^3$ |
|---|---|---|---|---|
| Threaded ends ¾" & M25 | **28138** | - | - | - |
| M-25 socket joint | **10892-0404** | - | - | - |
| Threaded ends ¾" and M26 150 cm | **28138-150** | - | - | - |



## 100 m cable roll HO7RN-F 2 x 6 $mm^2$

The roll contains 100 m of cable HO7RN-F, with 2x6 $mm^2$ section. Ideal for all lights with PAR 56, 300 W-12V lamps. Meets all the Standards of illumination and voltage for all types of pools. It is recommended for Standard, PS, Panel Protect, and UL-EUR series and fountain lights.

| | Code | Standard Pack | Standard Weight in kg | Standard Volume in $m^3$ |
|---|---|---|---|---|
| 100m cable roll | **15264** | 1 | 187.5 | - |



## Underwater connection kit

The kit has all the necessary components to carry out any watertight connection. Due to the properties of the product, the resin seals all gaps. Maximum safety, easy installation, in 2 hours it is ready to be submerged.

| | Code | Standard Pack | Standard Weight in kg | Standard Volume in $m^3$ |
|---|---|---|---|---|
| Kit for Ø 13 to 15 mm cables | **32803** | 1 | 0.3 | 0.002 |
| Kit for Ø 8 to 12 mm cables | **35661** | 1 | 0.3 | 0.002 |



## Overhead connector with IP68 protection rating and 4 poles

Has 5 connectors and two wrenches

| Code | Standard Pack | Standard Weight in kg | Standard Volume in $m^3$ |
|---|---|---|---|
| **71318** | 1 | - | - |

# AQUARMONY UNDERWATER MUSIC SYSTEM



## Aquarmony Loudspeaker

With frontal installation. To listen to music and voice underwater creating a magical and different atmosphere. Aquarmony is a sealed waterproof loudspeaker designed for your pool. It is made of high quality components, innovative technology and with an assembly system assuring a correct operation in salt water or with a high Chlorine content. Easy installation.

| | Code | Standard Pack | Standard Weight in kg | Standard Volume in $m^3$ |
|---|---|---|---|---|
| Aquarmony Loudspeaker | **25680** | - | - | - |
| Niche for concrete pool | **00349** | - | - | - |
| Niche for liner pool | **00364** | - | - | - |

**Note**: The niches come with a stuffing box assembly and a 1.5-m cable grommet specially designed for the Aquarmony range



| TECHNICAL FEATURES | |
|---|---|
| **Maximum power** | 60 W |
| **Impedance** | 4 ohm |
| **Frequency** | 200-12000 Hz |
| **Maximum area per loudspeaker** | 80 $m^2$ |
| **Maximum installation depth** | 40 cm |
| **Weight** | 5 Kg |
| **Cable length supplied** | 5 m |



## Amplifier and loudspeakers - RK400S

Built-in SELV power pack with all required protection ratings and safety systems.

- Fully insulated input and output ports, in compliance with standard ENV 61558-1 CEI EN 64-8/7, Section 702.
- RCA stereo input port compatible with any source (CD player, MP3 player, smartphone, etc.).
- Input and output XLR link for connecting other RK400-S devices together.
- Automated equalizers and limiters specially redesigned by Aquarmony.
- Automatic gain control, which does not require volume buttons.
- Four 60 W RMS amplifiers that work separately.
- Output though a gold-plated screw connector.
- On/off and signal display light.

| | Code | Standard Pack | Standard Weight in kg | Standard Volume in $m^3$ |
|---|---|---|---|---|
| Amplifier and loudspeakers | **RK400S** | 1 | - | - |

| TECHNICAL FEATURES | |
|---|---|
| **Maximum power** | 4 x 60 W rms |
| **Impedance** | 4 ohm |
| **Frequency** | 50-20,000 Hz |
| **Weight** | 3.6 Kg |





# POOL LINING MATERIAL


261 • Sopraliner 150/100 reinforced liner
264 • Alkorplan 200/100 reinforced liner
266 • Alkorplan 150/100 reinforced liner
268 • Alkorplan liner accessories
270 • Liner accessories
272 • Classification of liners depending on the pool
273 • Liners for stairs
274 • Conditions for accepting an order
275 • Glass tiling for pools
281 • Glass tiling for spas and wellness facilities
283 • Glass tiling: Projects
284 • Glass tiling: Technical specifications

# ASTRALPOOL RECOMMENDATION

## POOL FINISH COLOURS

**Colors of pool shell materials recommended by AstralPool depending on the color of your pool's finish.**

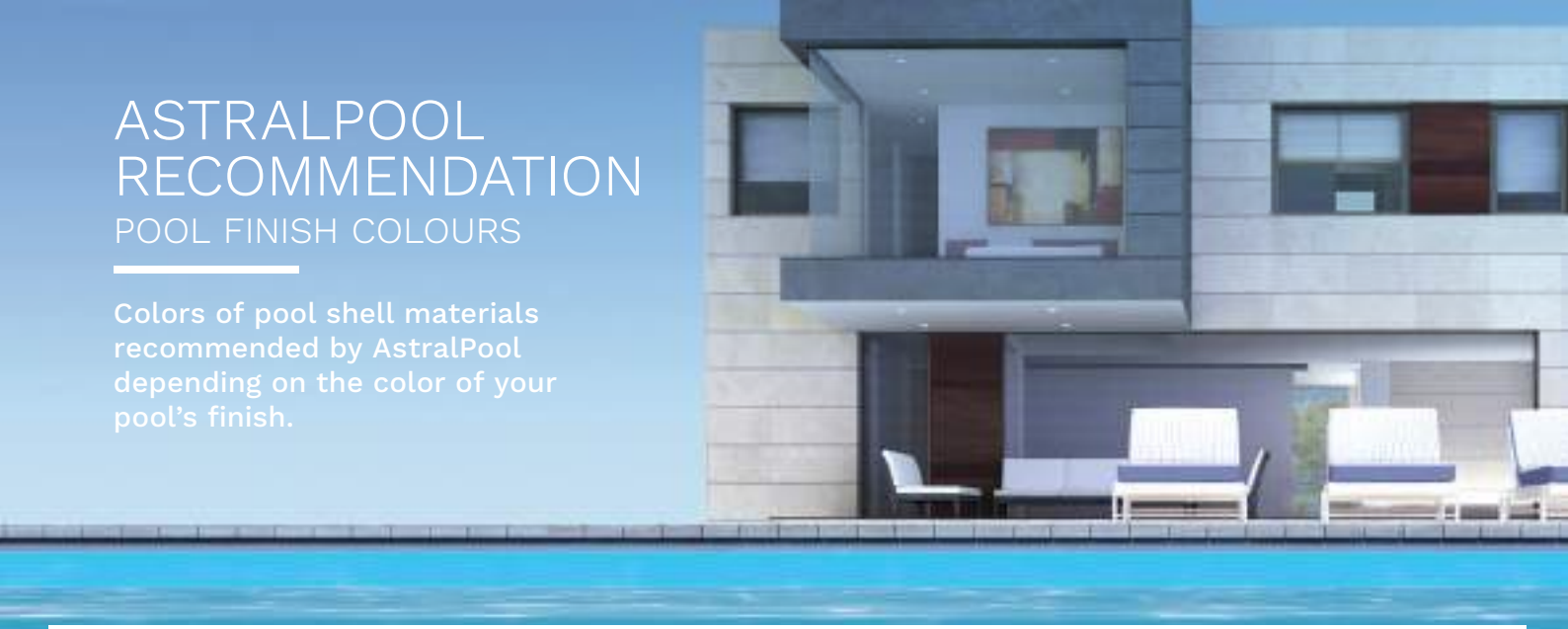

## POOL FINISH COLOURS

RECOMMENDED COLORS
DEPENDING ON POOL FINISH

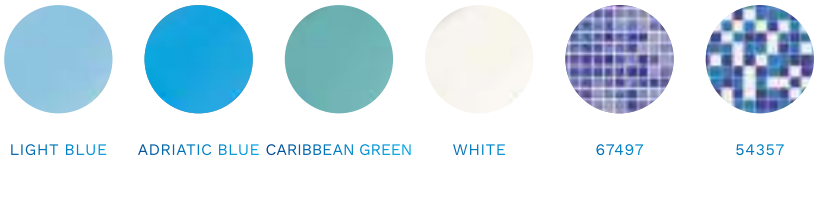

LIGHT BLUE | ADRIATIC BLUE | CARIBBEAN GREEN | WHITE | 67497 | 54357



**WHITE**

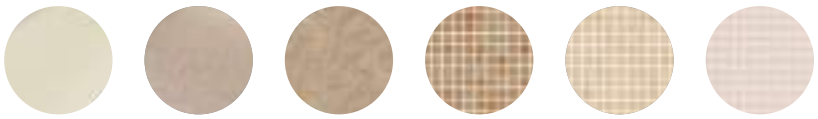

SAND | RELAX | SUBLIME | 54316 | 54324 | 54256 (MATTE - C3)



**BEIGE** CL090 RAL1015

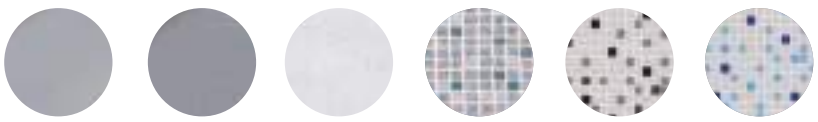

LIGHT GREY | PLATINUM | VANITY | SAND PERSIA | FADED MIX



**LIGHT GREY CL129 RAL7004**



DARK GREY | ELEGANCE | AUTHENTIC | 54398 | FADED MIX | 66717



**ANTHRACITE** CL144 RAL7016

## SOPRALINER 150/100 REINFORCED LINER

SopraLiner model

SOPRALINER

**more flexible**
**smoother**
**more intense colours**



### SOPREMA

This world leader in waterproofing systems has launched a reinforced PVC liner called Sopraliner. It is made by impregnating it with high quality raw materials (resins, plasticizers, stabilizers and pigments).

### LINER WITH 4 LAYERS

The reinforced synthetic PVC liner is made up of 4 layers with different compatible formulations, with reinforced polyester between the second and third layer.

This reinforcement makes the liner highly resistant to traction and extremely stable in terms of shrinkage.

### BIO-SHIELD TREATMENT

This protects the liner against the formation or micro-organisms and prevents any molecular changes.

### WARRANTIES

Sopraliner 150 : 10 years.

Sopraliner 150 +: 12 and 3 years against stains caused by bacteria.

## SOPRALINER colours

| Model | Sky blue | Blue | Perl Grey | Medium Grey | Basalt Grey | White | Sand | Marbella | Transparent | Bali Stone |
|---|---|---|---|---|---|---|---|---|---|---|
| SOPRALINER 150 | • | • | • | • | • | • | • | | | |
| SOPRALINER 150+ | • | • | • | • | • | • | • | • | | • |
| SOPRALINER GRIP | • | • | • | • | • | • | • | • | | • |
| LIQUID SOPRALINER | • | • | • | • | • | • | • | | • | |

# SOPRALINER 150/100 REINFORCED LINER


Blue


Sky Blue


Sand


White


Pearl Grey


Medium Grey


Basalt Grey


Bali stone


Marbella


Mosaic Black

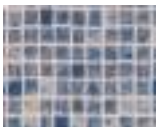
Mosaic Grey


Bali sand


Grey

## SOPRALINER 150 membrane

| Description | Colour | Code |
|---|---|---|
| **SOPRALINER 150**<br>**1.5 mm PVC reinforced liner with standard protection against UV rays and micro-organisms.**<br>**Roll of 1.65 x 25 m.** | Blue | **108246/AB** |
| | Sky Blue | **108246/CA** |
| | Sand | **108246/SA** |
| | White | **108246/HB** |
| | Pearl Grey | **108246/GC** |
| | Medium Grey | **108246/GM** |
| | Basalt Grey | **108246/GA** |

## SOPRALINER 150+ membrane

| Description | Colour | Code |
|---|---|---|
| **SOPRALINER 150+**<br>**1.5 mm PVC reinforced liner with coat of varnish that gives greater protection against UV rays and micro-organisms.**<br>**Roll of 1.65 x 25 m.** | Blue | **108248/AB** |
| | Sky Blue | **108248/CA** |
| | Sand | **108248/SA** |
| | White | **108248/HB** |
| | Pearl Grey | **108248/GC** |
| | Medium Grey | **108248/GM** |
| | Basalt Grey | **108248/GA** |
| | Bali Stone | **108248/BALI** |
| | Marbella | **108248/MMB** |

## SOPRALINER GRIP membrane

| Description | Colour | Code 5-metres long | Code 10-metres long |
|---|---|---|---|
| **SOPRALINER GRIP**<br>**Anti-slip 1.5 mm PVC reinforced liner.**<br>**Roll of 1.65 x 5 m or 1.65 x 10 m.** | Blue | **108250/AB** | **108251/AB** |
| | Sky Blue | **108250/CA** | **108251/CA** |
| | Sand | **108250/SA** | **108251/SA** |
| | White | **108250/HB** | **108251/HB** |
| | Pearl Grey | **108250/GC** | **108251/GC** |
| | Medium Grey | **108250/GM** | **108251/GM** |
| | Basalt Grey | **108250/GA** | **108251/GA** |
| | Bali Stone | **108250/BALI** | **108251/BALI** |
| | Marbella | **108250/MMB** | **108251/MMB** |
| | Mosaic Black New | - | **108251/MMBK** |
| | Mosaic Grey | - | **108251/MMG** |
| | Bali sand | - | **108251/SDBA** |
| | Grey | - | **118445/SVR** |

## SOPRALINER 150/100 REINFORCED LINER


White


Pearl Grey


Ceram Blue

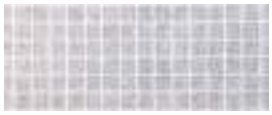
Ceram Grey


Sensitive Bali


Sensitive White


Sensitive Black


Sensitive Sand

### ARMONIA 3D membrane

New

The line Armonia 3D has been conceived aiming at replicating the feeling and the aesthetic aspect of mosaics and natural materials.

Thanks to the embossed patterns, with a great visual appeal, Armonia 3D is the solution addressed to those customers that are seeking the best aesthetic membrane combined with the traditional benefits of reinforced PVC liner: quick and easy setting, and a great protection and waterproofing capacity.

The products of the line Armonia 3D are guaranteed for 10 years.

| Description | Colour | Thickness | Code |
|---|---|---|---|
| **ARMONIA 3D membrane**<br>**Roll of 1.65 x 25 m.** | White | 1.5 mm | **117049/HB3D** |
| | Pearl Grey | 1.5 mm | **117049/GC3D** |
| | Ceram Blue | 1.5 mm | **117049/SCB** |
| | Ceram Grey | 1.5 mm | **117049/SCG** |
| | Sensitive Bali | 1.8 mm | **117685/SSBA** |
| | Sensitive White | 1.8 mm | **117685/SSHB** |
| | Sensitive Black | 1.8 mm | **117685/SSNB** |
| | Sensitive Sand | 1.8 mm | **117685/SSSA** |



### LIQUID PVC SOPRALINER

| Description | Colour | Code |
|---|---|---|
| **LIQUID SOPRALINER**<br>**1 litre tin.** | Transparent | **108872/FTA** |
| | Blue | **108872/AB** |
| | Sky Blue | **108872/CA** |
| | Sand | **108872/SA** |
| | White | **108872/HB** |
| | Pearl Grey | **108872/GC** |
| | Medium Grey | **108872/GM** |
| | Basalt Grey | **108872/GA** |

## ALKORPLAN 200/100 REINFORCED LINER

ALKORPLAN TOUCH

### ALKORPLAN TOUCH membrane

Inspired by nature, the designs bring beauty, elegance and character to each pool with a surprising touch, inviting you to caress the surface. This revolution in reinforced membranes for the lining of pools is now available in 3D. Surrender to the appeal of TOUCH and make any pool look spectacular.


Elegance


Relax


Authentic


Vanity


Sublime


Prestige

### ALKORPLAN TOUCH colours


Elegance


Relax

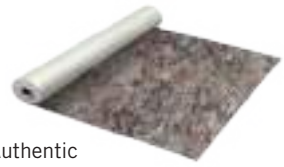
Authentic


Vanity


Sublime


Prestige

| Description | Colour | TOUCH 1.65 x 21 m | Antislip 1.65 x 20 m |
|---|---|---|---|
| **3D ALKORPLAN TOUCH reinforced membrane inspired by nature** | Elegance | **58532** | **58535** |
| | Relax | **58533** | **-** |
| | Authentic | **58534** | **-** |
| | Vanity | **67968** | |
| | Sublime | **67969** | |
| | Prestige | **67970** | |

## ALKORPLAN 200/100 REINFORCED LINER

ALKORPLAN CERAMICS reinforced membrane

ALKORPLAN CERAMICS is a reinforced 2-mm embossed membrane for pools that imitates the volume of real glass tiling and its joints to look like a mosaic inspired in Greek mythology.

Advantages:

- Watertightness guaranteed.
- Quick to fit in comparison with glass tiling.
- The ceramic pieces on ALKORPLAN CERAMICS do not fall off.
- Minimum maintenance.
- More resistant and long-lasting thanks to its 2-mm thickness.
- Embossed coating that makes it look like real glass tiling.

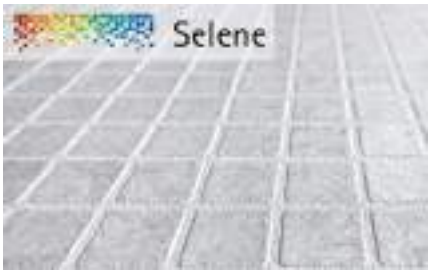




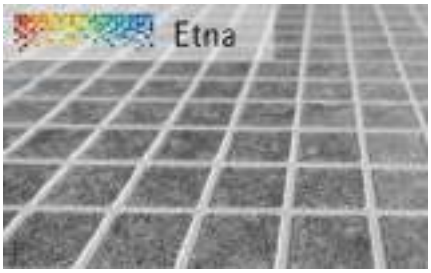









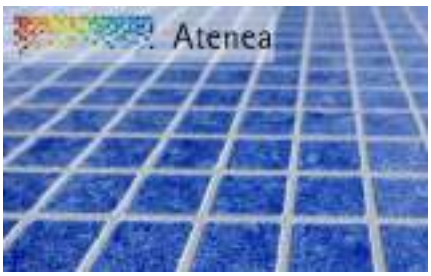








| Description | Colour | Width (mm) | Thickness (mm) | Length (mm) | Code |
|---|---|---|---|---|---|
| **ALKORPLAN CERAMICS reinforced membrane** | Sofia | 1,65 | 2,0 | 21 | **70671** |
| | Atenea | 1,65 | 2,0 | 21 | **70672** |
| | Selene | 1,65 | 2,0 | 21 | **70674** |
| | Etna | 2,05 | 2,0 | 21 | **70676** |

# ALKORPLAN 150/100 REINFORCED LINER

ALKORPLAN XTREME
Pools that stand up to anything!!

## ALKORPLAN XTREME membrane

ALKORPLAN XTREME is the only reinforced membrane in the market whose colour is resistant to chlorine and stains, even those that usually form on the waterline.

ALKORPLAN XTREME is a smooth, flexible and robust reinforced membrane, thanks to the most advanced technological developments, and it has been made to resist the wear and tear inherent to the daily use of a pool. It is even resistant if there is a continuous large influx of swimmers in a pool and aggressive chemical products are used to treat it.

## Colours

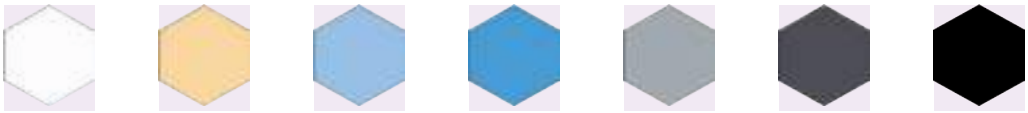

Ice | Sahara | Blue Fresh | Blue | Silver | Vulcano | Onix

NOT TOXIC PRODUCT
Healthier ... Less smoke

COMPATIBLE WITH PLANTS & FISH

| Description | Colour | Width (mm) | XTREME | Anti-slip XTREME |
|---|---|---|---|---|
| **ALKORPLAN XTREME reinforced membrane** | Ice | 1.65 | **70199** | **70229** |
| | Sahara | 1.65 | **70200** | **70230** |
| | Blue Fresh | 1.65 | **70217** | **70232** |
| | Blue | 1.65 | **70218** | **70233** |
| | Silver | 1.65 | **70222** | **70235** |
| | Vulcano | 1.65 | **70223** | **70236** |
| | Onix | 1.65 | **70224** | **69392** |
| | Ice | 2.05 | **70225** | - |
| | Blue Fresh | 2.05 | **70228** | - |







## ALKORPLAN 150/100 REINFORCED LINER

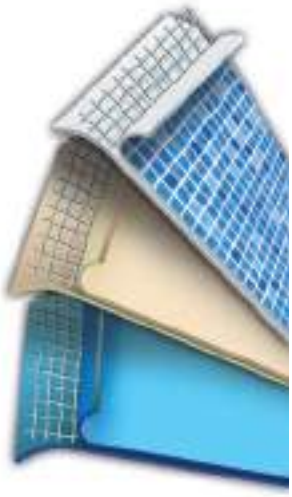

### ALKORPLAN2000 reinforced membrane

| Description | Colour | ALKORPLAN2000 1.65 x 25 m | Anti-slip 1.65 x 12.60 m |
|---|---|---|---|
| **ALKORPLAN2000 reinforced monochrome membrane, coated in a varnish made of a special formulation that protects it from external wear and tear** | Light Blue | **49908** | **66117** |
| | Adriatic Blue | **49909** | **66115** |
| | Caribbean Green | **49910** | **66116** |
| | White | **49911** | **66114** |
| | Sand | **49912** | **66118** |
| | Light Grey | **49913** | **66119** |
| | Dark Grey | **49914** | - |

### ALKORPLAN3000 membrane

| Description | Colour | ALKORPLAN3000 1.65 x 25 m | Anti-slip 1.65 x 12.60 m |
|---|---|---|---|
| **ALKORPLAN3000 reinforced decorated membrane, coated in a varnish made of a special formulation that protects it from external wear and tear** | Byzanz Blue | **49916** | **67285** |
| | Mosaic | **49918** | - |
| | Carrara | **49919** | **52611** |
| | Marble | **49920** | - |
| | Blue Persia | **49921** | **67283** |
| | Sand Persia | **49907** | - |
| | Black Persia | **60612** | - |
| | Platinum | **49922** | - |

### AlkorPlan2000 / AlkorPlan3000 colours


Light Blue

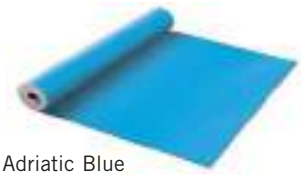
Adriatic Blue


Caribbean Green


White


Sand


Light Grey


Dark Grey


Byzanz Blue


Mosaic


Carrara


Marble


Blue Persia


Sand Persia


Platinum


Black Persia

# ALKORPLAN LINER ACCESSORIES



## ALKORPLUS weld sealant for the ALKORPLAN 2000 and 3000 ranges

| Description | Colour | AlkorPlan 2000 and 3000 liquid PVC |
|---|---|---|
| **Liquid PVC ALKORPLUS for sealing joints (1 litre tins/pack of 6 tins)** | Light Grey | **52618** |
| | Dark Grey | **52619** |
| | Caribbean Green | **52620** |
| | White | **52622** |
| | Transparent | **52623** |
| | Light Blue | **52624** |
| | Adriatic Blue | **52625** |
| | Sand | **52626** |
| | Platinum | **52627** |



## ALKORPLUS TOUCH weld sealant

Specifically for fitting ALKORPLAN TOUCH membranes. Made using an innovative formulations that makes it more resistant to ageing and fading, thus prolonging the pool's service life and its perfect appearance by many years.

| Description | Colour | Code |
|---|---|---|
| **Liquid PVC ALKORPLUS TOUCH for sealing welds** | Elegance | **60613** |
| | Relax | **60614** |
| | Authentic | **60615** |
| | Vanity | **67971** |
| | Sublime | **67972** |
| | Prestige | **67973** |



## ALKORPLAN XTREME weld sealant

| Description | Colour | Code |
|---|---|---|
| **ALKORPLAN XTREME weld sealant (1 litre tins/pack of 6 tins)** | Ice | **70266** |
| | Sahara | **70268** |
| | Blue Fresh | **70270** |
| | Blue | **70272** |
| | Silver | **70273** |
| | Vulcano | **70274** |
| | Onix | **69391** |




## ALKORPLAN CERAMICS weld sealant

| Description | Colour | Code |
|---|---|---|
| **Liquid PVC ALKORPLAN CERAMICS for finished welds (900 g tins/pack of 6 tins)** | White | **70678** |

# ALKORPLAN LINER ACCESSORIES



## Sealant ALKORFIX MS-Polymer based multipurpose fixer

New

Complete range of MS-polymers in different colours in order to be combined with all our reinforced pool liners **TOUCH** and with most of our other ranges.

MS-polymers not only serve to seal the membrane with the pool coping but also to chemically mount the anchoring to the walls provided that there is a mechanical mounting. It is also suitable for provisional repairs when the pool is filled.

| Description | Contents (ml/drum*) | Packaging | Colour | Code |
|---|---|---|---|---|
| **Ms-polymer based multipurpose fixer TOUCH Elegance, XTREME Volcano and 2000 Dark Grey** | 300 | 12 units per box | Dark Grey | **72725** |
| **Ms-polymer based multipurpose fixern TOUCH Relax, 2000 Sand and XTREME Sahara** | 300 | 12 units per box | Sand | **72726** |
| **Ms-polymer based multipurpose fixern TOUCH Vanity, 2000 White, XTREME Ice and ranges 3000 and CERAMICS** | 300 | 12 units per box | White | **72727** |
| **Ms-polymer based multipurpose fixer TOUCH Sublime and TOUCH Authentic** | 300 | 12 units per box | Travertino | **72728** |
| **Ms-polymer based multipurpose fixer TOUCH Prestige, XTREME Silver, 2000 Light Grey and 3000 Platinum** | 300 | 12 units per box | Light Grey | **72729** |



## Strip for installation without overlap

Strip to install the AlkorPlus TOUCH membrane without overlapping, recommended for the swimming pool floor for a flawless visual finish. Its use is recommended with geotextile felt of 300 g or 400 g on the bottom of the pool to prevent visible lumps appearing at the joints and welds.

| Description | Colour | Code |
|---|---|---|
| **Strip for installation without overlap** | Grey | **60616** |



## ALKORPLAN geotextile fungicide

Felt made up of 400 g/m² light blue heat-welded polypropylene fibres treated with metal ion anti-bacterial organic additives to act as a stable fungicide. It is used as a protective layer between the ALKORPLAN membrane and the pool surface to prevent the proliferations of bacteria, fungi and micro-organisms, as well as imitating the irregular embossed surfaces that the pool may have had before fitting the liner. Bathers also find the bottom of the pool much more pleasant when they walk on the membrane.

| Description | Width | LENGTH | Colour | Code |
|---|---|---|---|---|
| **ALKORPLAN geotextile fungicide of 400 g/m² for butt welding** | 1.50 m | 50 m | Light Blue | **69179** |
| **ALKORPLAN geotextile fungicide 400 g/m²** | 1.65 m | 50 m | Light Blue | **66381** |
| **ALKORPLAN geotextile fungicide 400 g/m²** | 2.00 m | 50 m | Light Blue | **66382** |



## Public pools

| Description | Colour | Code |
|---|---|---|
| **Lane strips (25 x 0.25 m)** | Black | **50798** |

# LINER ACCESSORIES



## Skimmer Adaptor: Skimmer Solution

The skimmer adaptor replaces the need to remove the previous skimmer, as it is inserted into the previous skimmer and sealed using ABS glue or marine silicone. It is only suitable for skimmers with an internal opening of 140 mm x 201 mm

| Code | Standard Pack | Standard Weight in kg | Standard Volume in $m^3$ |
|---|---|---|---|
| **55977** | 1 | 1.3 | - |



40844



05819

05815



05816

## Fastening accessories for liners 75/100° for pools under construction

| | Code | Standard Pack | Standard Weight in kg | Standard Volume in $m^3$ |
|---|---|---|---|---|
| Horizontal Hung PVC 1.5 m x 50 mm (free form) | **40844** | - | - | - |
| Horizontal hung PVC 2 m x 50 mm | **05815** | - | - | - |
| Horizontal hung PVC 2 m x 38 mm | **09492** | - | - | - |
| Angle PVC radius of 15 cm x 50 mm | **05819** | - | - | - |
| Angle PVC radius of 15 cm x 38 mm | **09493** | - | - | - |
| **In Aluminium** | | | | |
| Horizontal hung ALU 2 m x 50 mm | **05816** | - | - | - |
| ALU angle 50 mm (radius of 15 cm) | **05818** | - | - | - |
| Fastening rivets (Box of 250 units) | **05820** | - | - | - |
| Flexible fastening strip. Lineal metre | **05825** | - | - | - |



05817 16175



05825

05820

## Fastening accessories for liners 75/100° for pool renovation

| | Code | Standard Pack | Standard Weight in kg | Standard Volume in $m^3$ |
|---|---|---|---|---|
| Vertical hung PVC 2 m | **05817** | - | - | - |
| Angle for vertical fastening (radius 15 cm) | **16194** | - | - | - |
| **In Aluminium** | | | | |
| Vertical hung ALU 2 m | **16175** | - | - | - |
| Fastening rivets (Box of 250 units) | **05820** | - | - | - |
| Flexible fastening strip. Lineal metre | **05825** | - | - | - |

# LINER ACCESSORIES




## Accessories for liners 150/100°

| | Code | Standard Pack | Standard Weight in kg | Standard Volume in m³ |
|---|---|---|---|---|
| Galvanized plate band (2 x 0.05 m) | **32324** | - | - | - |
| Applicator bottle (unit) | **05780** | - | - | - |
| Band (8 mm) | **05781** | - | - | - |
| Solvent THF (1 litre) | **05778** | - | - | - |
| Solvent THF (5 litres) | **05779** | - | - | - |
| Neoprene glue for PVC (5 Kg) | **05784** | - | - | - |

**Note**: In the event of assembling a liner 150/100° by hung type fastening with an 8 mm strip, the accessories are the same as for liners 75/100° (see next page).




## Adhesives for all types of liners

| | Code | Standard Pack | Standard Weight in kg | Standard Volume in m³ |
|---|---|---|---|---|
| Adhesive for antibacterial protection (Tin 5 Kg) | **25748** | - | - | - |
| Komerling adhesive 1220 (Tube 125 ml) | **06655** | - | - | - |
| Komerling adhesive 1220 (Tin 750 ml) | **06656** | - | - | - |



## Liner protection for 75/100° and 150/100°

| | Code | Standard Pack | Standard Weight in kg | Standard Volume in m³ |
|---|---|---|---|---|
| Protection 300 gr/m² AB blue (roll 100 m²) | **16176** | - | - | - |



## Rivets

Aluminium rivets.

| | Code | Standard Pack | Standard Weight in kg | Standard Volume in m³ |
|---|---|---|---|---|
| Short 15.5 - 4.5 mm | **12264** | 4 | 8.85 | 0.01 |
| 25 x 4,8 mm | **53795** | 3 | 8.0 | 0.01 |



## Double PVC hem

Welded to the edge of the liner, allows the liner to attach to the pool shell, by using the corresponding profile.

| Code | Standard Pack | Standard Weight in kg | Standard Volume in m³ |
|---|---|---|---|
| **12184** | 250 m | 9.0 | 0.036 |



## ALKORCLEAN waterline degreaser and ALKORPLUS stain remover

The ALKORCLEAN degreaser is recommended for removing grease from the waterline, while the ALKORPLUS stain remover neutralises metal ions in the water such as copper.

The ALKORPLUS stain remover is a liquid to prevent stains by preventing dirt forming on the waterline.

| | Code | Standard Pack | Standard Weight in kg | Standard Volume in m³ |
|---|---|---|---|---|
| ALKORCLEAN waterline degreaser | **55976** | - | - | - |
| Alkorplus stain remover | **53898** | - | - | - |

Consult us for pools of different designs and shapes

## CLASSIFICATION OF LINERS DEPENDING ON THE POOL

### Standard pool liners 75/100°

| Solid colour models | Code |
|---|---|
| Light Blue | 09278 |
| France blue | 09277 |
| Caribbean Green | 09281 |
| white | 09279 |
| Sand | 16131 |

| Printed colour models | Code |
|---|---|
| Servanne | 26668 |
| Mosaic | 09280 |
| Blue Marble | 16132 |
| Green Marble | 16132V |
| Sand Marble | 16132A |
| Byzantium blue | 26669 |
| Byzantium green | 26670 |

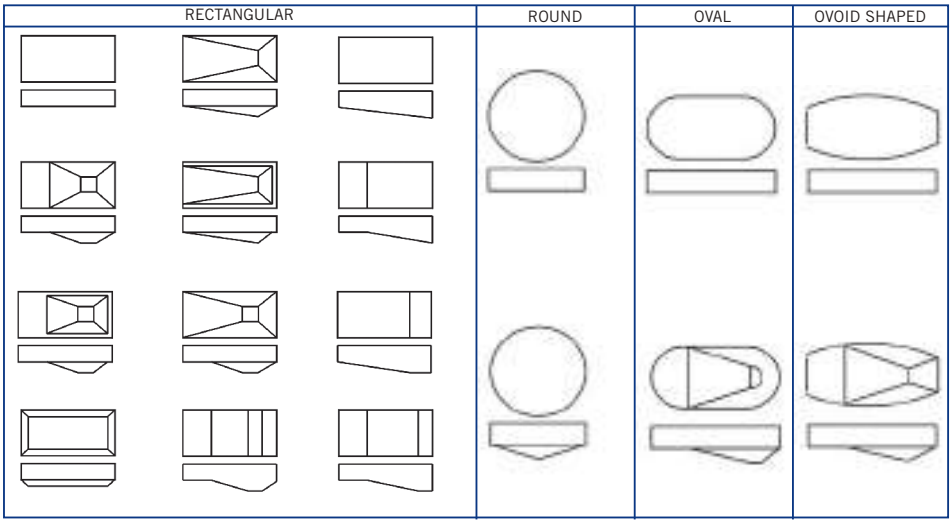


### Non-standard pool liners 75/100°

| Solid colour models | Code |
|---|---|
| Light Blue | 05810 |
| France blue | 05809 |
| Caribbean Green | 05813 |
| White | 05811 |
| Sand | 16137 |

| Printed colour models | Code |
|---|---|
| Servanne | 26686 |
| Mosaic | 05812 |
| Blue Marble | 16138 |
| Green Marble | 16138V |
| Sand Marble | 16138A |
| Byzantium blue | 26678 |
| Byzantium green | 26679 |

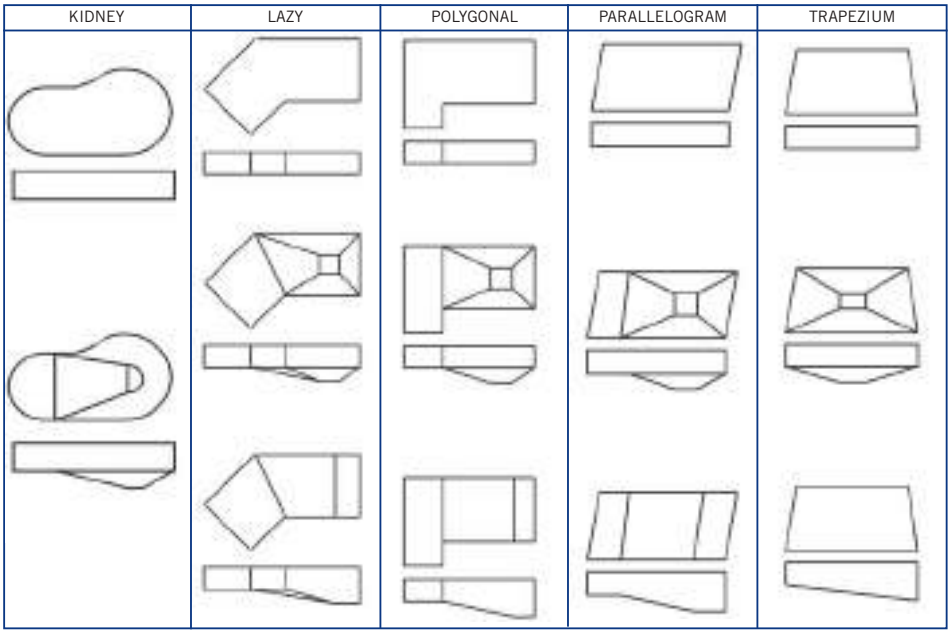

## LINERS FOR STAIRS

**For steps that do not fit the Standard models shown here, request quote.**

Below we provide you with the details of the shapes and models you can choose from plain or printed liners to ensure you select the correct liner for your pool steps. Steps that are fitted along the breadth of the basin are invoiced in accordance with the standard model STRAIGHT as long as the width does not exceed 4 meters. Attention: the size of the basin should not include the depth of the steps.

### Standard steps

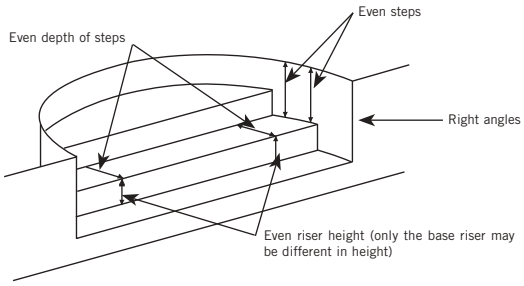


### Non Standard steps

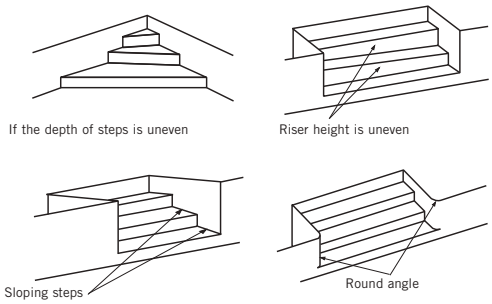


| Steps | | Plain Liner | Plain Liner + Bands | Diagram |
|---|---|---|---|---|
| **Shape** | **Widths** | **Code** | **Code** | |
| Straight | 0 to 2 meters | **05789** | **05789B** |  |
| | 3 to 4 meters | **05791** | **05791B** | |
| Roman | 0 to 2 meters | **16163** | **16163B** |  |
| | 2 to 3 meters | **25868** | **25868B** | |
| | 3 to 4 meters | **05800** | **05800B** | |
| Right angle | 0 to 2 meters | **05803** | **05803B** | 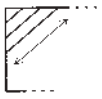 |
| | 2 to 3 meters | **05804** | **05804B** | |
| ¼ Circle | 0 to 2 meters | **16167** | **16167B** | 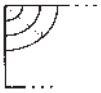 |
| | 2 to 3 meters | **089443** | **089443B** | |

| Steps | | Printed Liner | Printed Liner + Bands | Diagram |
|---|---|---|---|---|
| **Shape** | **Widths** | **Code** | **Code** | |
| Straight | 0 to 2 meters | **05794** | **05794B** | 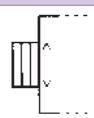 |
| | 2 to 3 meters | **05795** | **05795B** | |
| | 3 to 4 meters | **05796** | **05796B** | |
| Roman | 0 to 2 meters | **16169** | **16169B** |  |
| | 2 to 3 meters | **05801** | **05801B** | |
| | 3 to 4 meters | **05802** | **05802B** | |
| Right angle | 0 to 2 meters | **05806** | **05806B** | 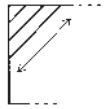 |
| | 2 to 3 meters | **05807** | **05807B** | |
| ¼ Circle | 0 to 2 meters | **16173** | **16173B** | 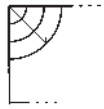 |
| | 2 to 3 meters | **089446** | **089446B** | |

## CONDITIONS FOR ACCEPTING AN ORDER

**Note: The colours shown in the catalogue are approximate**

Order:

All orders or enquiries for modifying orders must be made in writing.
For avoiding any delay, the client, at his own risk, must forward the supplier all the necessary liner measurements for executing the work. In case the information supplied by the client is insufficient, he will have to supply the missing information ahead of the manufacturing time.

Implicit data:

If the following information is not supplied in writing with the order, we shall consider the below mentioned data for the liner manufacture:

* Vertical radii of 15 cm.
* Horizontal radii of a maximum of 5 cm (in the pool shell only). Hung-type fastening system.
* The horizontal measurements taken from the pool shell.
* The depth measurements taken from the lower part of the pool's coping stone to the base of the wall.
* The diagonal measurements taken of the right angles, not of the radii.

To avoid certain misunderstandings, we suggest you take the following precautions:

For holding the liner:
* Specify the type (hung, overlap or V-fasteners); we anticipate that an additional 15 cm of material will be required for the walls if the overlap fastening system is used.

For steps:
* Check whether the angles between the step tread and rise (flat and vertical step surfaces) are truly rectilinear.
* Installation of a discharge nozzle in the middle of the first step is highly recommended for holding the liner in place.
* At least 30 cm of water should be left in the pool for maintaining the first step.
* Avoid designing staircases having more than 5 steps.
* To confirm dimensions, give the lengths of each step.
* Check the verticality of pool walls. In case of deficient plumbness, enquire about the order viability.
* Compound inclination safety ledges should be avoided on the liner.

Taking measurements:

Provide the total lengths and widths.
* All heights of the pool shell.
* Width of the safety step on each side.
* Specify the peripheral size of each side.
* Provide the measurements of each corner and slope.
* All dimensions should be provided with horizontal and/or vertical measurements.

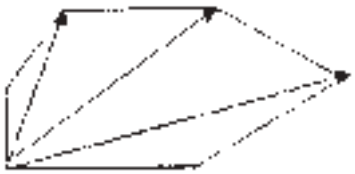

If angles are not straight:

* Measure all of the diagonals from a single point.
* The diagonals of the right angles are only required for irregular shaped pools without right angles.

Calculation of arcs of circles:

* The arcs of circles are calculated by their radius.
* If the radius has not been calculated, a template must be used or the triangulation must be calculated to specify it.
* Ellipses are calculated using templates (or a grid plan made at intervals of approximately 1 m).

Sectional views:

* Three views are recommended: a top view, a front view and a side view.

Templates:

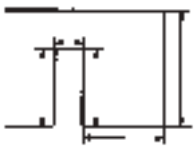

* Make templates for the sky and water sides (or one view).
* Templates are made for the pool's shell or cover.

Shuttering:



* Specify the measurements of the shuttering as shown in the diagram.
* Check that the inside vertical angles of the shutterings are straight.
* Check that vertical pool shell angles shuttering are in a straight line.
* Check that the horizontal angle of the wall and shuttering are in a straight line.

## GLASS TILING FOR POOLS

### Pearl


54160


57371


62312


67497


67498


57371

### Blue mix


54357


61291


54417

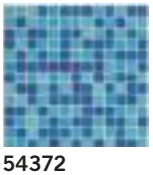
54372


61291

## GLASS TILING FOR POOLS

### Lagoon effect


54314


54313


54312


63141


63141

### Beach effect

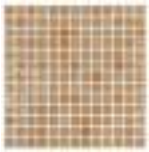
54316


54324

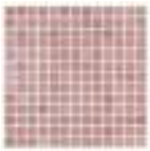
54315

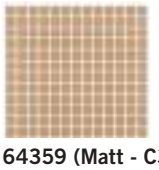
64359 (Matt - C3)


54315

## GLASS TILING FOR POOLS

### Stone effect


54398


54328


54344

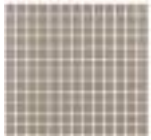
54231 (Matt - C3)


54328

### White


60020


54369


54256 (Matt - C3)


54369

## GLASS TILING FOR POOLS

### Anti-slip


54282 (Matt - C3)


54278 (Matt - C3)


54279 (Matt - C3)



### Blue


54403


54399


54400

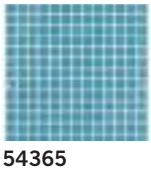
54365

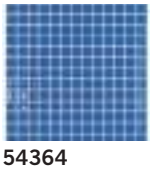
54364



## GLASS TILING FOR POOLS

### Faded

FADED MIX
25P (personalized shades) *

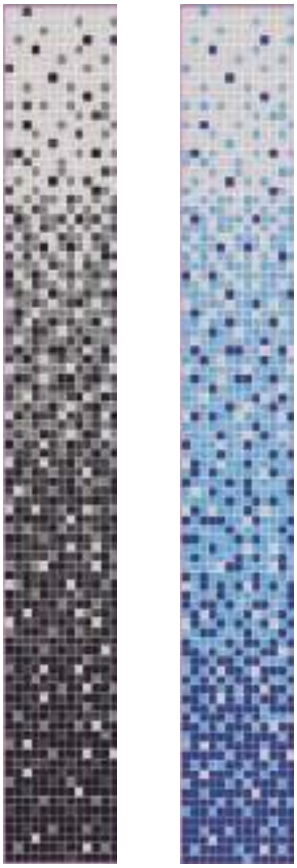

PREMIUM PEARL FINISH MIX



**66792**



**66793**



**66794**



**66796**



**66798**

CUSTOMIZED SHADES



Enter the dimensions to be covered and the selection of colours to be combined to obtain your customized border. Consult your dealer.

** Ask about shade width and height and colour references of the previous pages*

### Patterned borders



**22164**

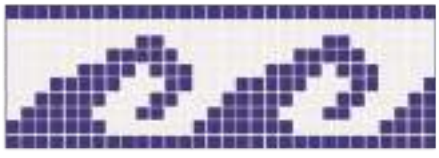

**16040**

CUSTOMIZED BORDER

Customize your border with any colour combination you wish. Consult your dealer.

### Designs




**45160**
COMPASS ROSE
267 x 267 cm

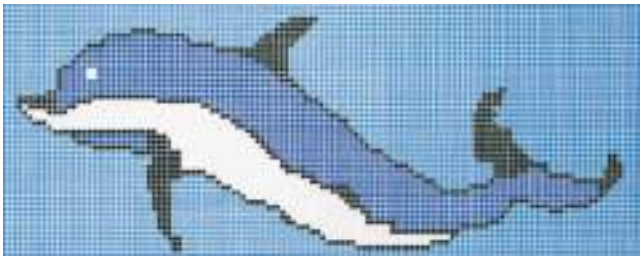

**16043**
DOLPHIN
333 x 133 cm



**45152**
PLAYING DOLPHINS
300 x 300 cm

## GLASS TILING FOR POOLS

Examples of fade-effect tiling



64426





66792





66796



# GLASS TILING FOR SPAS AND WELLNESS FACILITIES

## New Spa & Wellness decoration products

Combinations of glass mosaic tiling in matt, gloss, metallic and iridescent finishes.

- Variations in brightness and colour depending on the exposure to light.
- Resistant to thermal shock, staining, sunlight and presents zero porosity.
- As it is totally stable, easy to clean and fit, it is ideal for decorating interiors and exteriors.

| | |
|---|---|
| **Dimensions of 2.5 x 2.5 plaques:** | **33.4 x 33.4 cm** |
| **Dimensions of 5 x 5 plaques:** | **30.7 x 30.7 cm** |

## 2.5 x 2.5 finishes



**71180 - Durban**



**71179 - Milan**



**71178 - Tokyo**

## 5 x 5 finishes



**72000 - Bronze**



**72002 - Cooper**

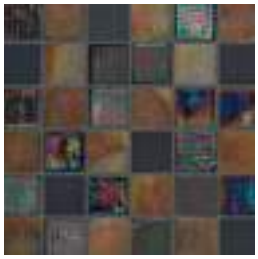

**72010 - Gold**

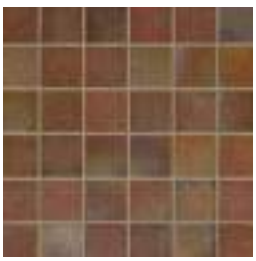

**72008 - Oxid**



**72006 - Silver**



**72004 - Steel**

## GLASS TILING FOR SPAS AND WELLNESS FACILITIES

Examples of projects carried out using a 5 x 5 finish


72000



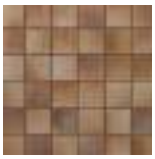
72002




72010




72008




72006




72004





71180



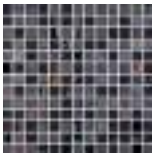
71178



## GLASS TILING: PROJECTS

# Customized projects



We create drawings and designs in the shapes and colours of your choice. The limits are in your imagination!



# Luminescent





54390

Our luminescent mosaic is ideal for signage. It shines in the dark!

# GLASS TILING: TECHNICAL SPECIFICATIONS

## Packing list

PLAIN / FOG / TOGAMA MIX / MATT - NON-SLIP / PEARL/DIGITAL FLASH** / LUMINESCENT/DRAWINGS*

| Packaging list | Dimensions/Plate | m² / Box | m² / Plate | Kg / Box | Box / Pallet | m² / Pallet | Kg / Pallet |
|---|---|---|---|---|---|---|---|
| 2.5 x 2.5 cm | 33.4 x 33.4 cm | 2 | 0,115 | 18 | 72 | 144 | 1306 |

PATTERNED BORDERS

| Packaging list | | Dimensions/Plate | m² / Box | Kg / Box | Box / Pallet | m² / Pallet | Kg / Pallet |
|---|---|---|---|---|---|---|---|
| **22164** | 2.5 x 2.5 cm. | 18 x 31.5 cm | 11 | 18 | 72 | 792 | 1306 |
| **16040** | 2.5 x 2.5 cm. | 25.5 x 33.4 cm | 6 | 18 | 72 | 432 | 1306 |

## Technical specifications

| Standard | Description of standard | Plain | Fog | Non-slip matt | Pearl | Flash Digital |
|---|---|---|---|---|---|---|
| UNE-EN 10545-3:1997 | Water absorption | < 0,10% | < 0,10% | | < 0,10% | < 0,10% |
| UNE-EN 10545-12:1997 | Scratch resistance | Resistant | Resistant | Resistant | Resistant | Resistant |
| UNE-EN 10545-13:1997 | Chemical resistance | UA/ULA/UHA | UA/ULA/UHA | UA/ULA/UHA | UA/ULA/UHA | UA/ULA/UHA |
| UNE-EN 10545-14:1998 | Stain resistance | Class 5 | Class 5 | | Class 5 | Class 5 |
| UNE 67-101:1985+1M:92 | Mohs scale resistance to surface scratching | 4 | 4 | 6 | 5 | 5 |
| UNE-ENV 12633:2003 ANNEX A | Resistance to slipping (Pendulum) | | | Class 3 | | |
| DIN 51130:2010 Section 5 | Critical angle of displacement (ramp) | | | R13 | | |
| DIN 51097:1992 | Critical slip angle in wet areas where people walk barefoot | | | Class C | | |
| ISO/DIS 10545-17:1998 ANNEX A | Dynamic friction coefficient (Tortus) | | | Excellent | | |

## Recycled product - Sustainable product

ENVIRONMENTAL PRODUCT SELF-DECLARATION Pursuant to UNE-EN ISO 14021

| 1m² of glass mosaic tiling (including mesh) | Brand |
|---|---|
| Total solid content (kg/m²) | 9.97 |
| Content of solid virgin matter | 1.25 |
| Minimum content of after-consumption recycled material (kg/m²) | 8.72 |
| MINIMUM CONTENT OF RECYCLED MATERIAL (%) [X = A / A.P.100] | 87.4 |

## Finishes - Polyurethane knit

UNNION POLYURETHANE SYSTEM

- Resistance
- Durability
- Does not get into joints
- Flexibility
- Easy to place
- Excellent grip

MADE IN SPAIN

87 %

* The borders and patterns are on paper. (Once applied to the mosaic tiling the paper must be removed).
** Digital flash on a transparent film finish. (Once applied to the mosaic tiling the film must be removed)



# COVERS AND ROLLERS

## Thermal and protective covers


287 • Thermal covers - Bubble
288 • Premium thermal covers for summer
289 • Thermal covers - Foam
290 • Protection covers for winter
291 • Pool cover accessories
291 • Reinforced PVC protection covers
293 • Storage rollers for covers


## Automatic covers


296 • General information
298 • Above-ground models
302 • In-ground models
307 • Demonstration models
311 • PVC slats
312 • Step slats
313 • Polycarbonate slats and steps
314 • Liner accessories
315 • Wireless remote controls with key
316 • Manufacturer's specifications
317 • Technical specifications

# AUTOMATIC COVERS: COMPARISON

## Model comparison

| | Above-ground | | In-ground | | | | |
|---|---|---|---|---|---|---|---|
| | N-Carlit | | Dry decking | | | In-ground decking | |
| | N-Carlit | N-Carlit Solar | Roussillon Dry well | Roussillon Motor in the shaft | Roussillon Motor at water level | Roussillon Dry well | Roussillon Motor in the shaft |
| |  |  |  |  |  |  |  |
| **Maximum dimensions (m)** | 14 x 7.5 | 12 x 6 | 20 x 11 | 12 x 8 | 12 x 6 | Consult | Consult |
| **Power** | Supply | Solar | Supply | Supply | Supply | Supply | Supply |
| **Warranty (motor and distribution board)** | 3 years | 3 years | 5 years | 4 years | 4 years | 5 years | 4 years |
| **Safety (NFP 90-308 compliant)** | ✓✓✓✓ | ✓✓✓✓ | ✓✓✓✓ | ✓✓✓✓ | ✓✓✓✓ | ✓✓✓✓ | ✓✓✓✓ |
| **Energy savings** | ✓✓✓✓ | ✓✓✓✓ | ✓✓✓✓ | ✓✓✓✓ | ✓✓✓✓ | ✓✓✓✓ | ✓✓✓✓ |
| **User-friendly** | ✓✓✓✓ | ✓✓✓✓ | ✓✓✓✓ | ✓✓✓✓ | ✓✓✓✓ | ✓✓✓✓ | ✓✓✓✓ |
| **Stylish** | ✓✓ | ✓✓ | ✓✓✓✓ | ✓✓✓✓ | ✓✓✓✓ | ✓✓✓✓ | ✓✓✓✓ |
| **Installation in existing pool** | ✓✓✓ | ✓✓✓✓ | ✓✓ | ✓✓ | ✓✓ | ✓✓ | ✓✓ |
| **Installation in new-build pool** | ✓✓✓✓ | ✓✓✓✓ | ✓✓✓✓ | ✓✓✓✓ | ✓✓✓✓ | ✓✓✓✓ | ✓✓✓✓ |
| **PVC slats can be fitted** | ✓✓✓✓ | ✓✓✓✓ | ✓✓✓✓ | ✓✓✓✓ | ✓✓✓✓ | ✓✓✓✓ | ✓✓✓✓ |
| **Polycarbonate slats can be fitted** | ✓✓✓✓ | ✓✓✓✓ | ✓✓✓✓ | ✓✓✓✓ | ✓✓✓✓ | ✓✓✓✓ | ✓✓✓✓ |

* Only motor

Accessories appear on page 291 of the catalogue

# THERMAL COVERS - BUBBLE

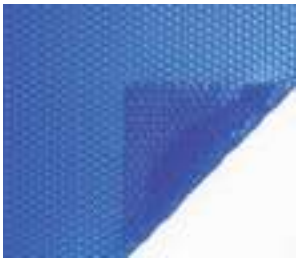

Blue-blue bubble



Blue-black bubble

## Floating Isothermal "Bubble" Covers

- **Composition:** Polyethylene-based material.
- **Joint**: Ultrasonic welding.
- **Edges:** Sewn polyethylene trims.
- **NB model:** Cut only - no trim.
- **Eco model:** Trimmed on both width sides
- **Deluxe model:** Perimeter trim.
- **Fastening**: Eyelets at either end on primary width side.
  Eyelets approx. every 65 cm on secondary width side.
- **Composition:** Nickel-plated brass eyelet.
- **Packaging**: Supplied in a cardboard box with a protective cover and instruction handbook.
- **Thickness**: 400 µm.

| Model | Pool Type | Code | Standard Pack | Standard Weight in kg | Standard Volume in $m^3$ |
|---|---|---|---|---|---|
| NB Blue | Standard | **09296** | - | - | - |
| Eco Blue | Standard | **09294** | - | - | - |
| Eco Blue | Freeform | **06214** | - | - | - |
| Deluxe Blue | Standard | **09295** | - | - | - |
| Deluxe Blue | Freeform | **03975** | - | - | - |
| Deluxe Blue-Black | Standard | **16185** | - | - | - |
| Deluxe Blue-Black | Freeform | **11483** | - | - | - |



NB



ECO



Luxe

## Steps and accessories bubble models

| | Code | Standard Pack | Standard Weight in kg | Standard Volume in $m^3$ |
|---|---|---|---|---|
| Straight stairs fixed price | **06215** | - | - | - |
| Roman stairs fixed price | **06217** | - | - | - |
| Other stairs fixed price | **06218** | - | - | - |
| Special cut pieces for stairs | **03976** | - | - | - |
| Additional nickel-plated brass eyelet | **04001** | - | - | - |

## PREMIUM THERMAL COVERS FOR SUMMER

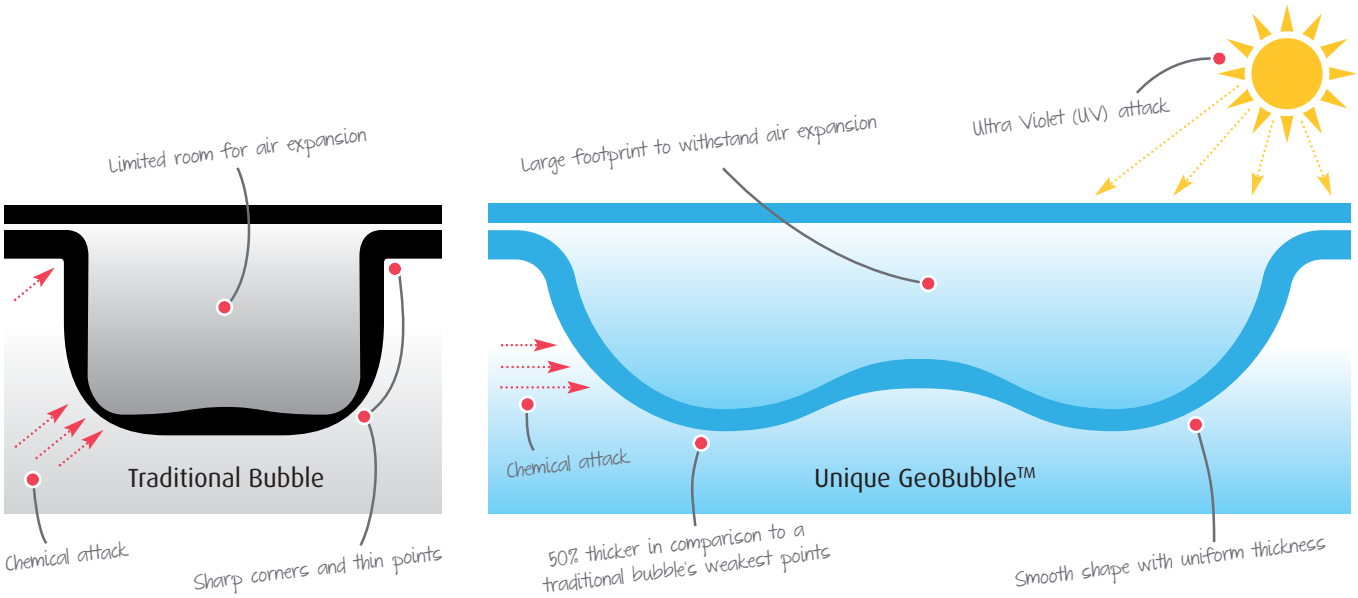


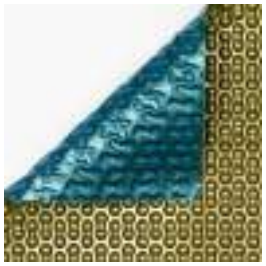

### GeoBubble 500 µm model - Dark blue/Gold

| | Pool Type | | |
|---|---|---|---|
| | Standard shape | Non-Standard | Freeform |
| Without border | 075549 | 075550 | 075551 |
| Duo | 075552 | 075553 | 075554 |
| Luxe | 075555 | 075556 | 075557 |

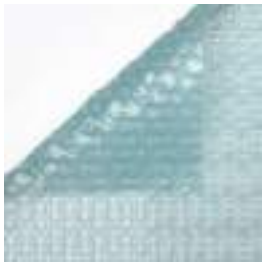

### GeoBubble 500 µm model -Sun+Guard

| | Pool Type | | |
|---|---|---|---|
| | Standard shape | Non-Standard | Freeform |
| Without border | 075558 | 075559 | 075560 |
| Duo | 075561 | 075562 | 075563 |
| Luxe | 075536 | 075537 | 075538 |

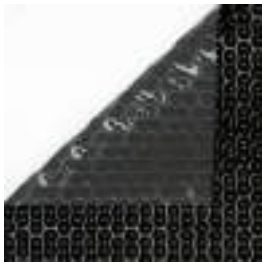

### GeoBubble 500 µm model - EnergyGuard

| | Pool Type | | |
|---|---|---|---|
| | Standard shape | Non-Standard | Freeform |
| Without border | 075564 | 075565 | 075566 |
| Duo | 075567 | 075568 | 075569 |
| Luxe | 075570 | 075571 | 075572 |

### Ladders for GeoBubble 500 µm models

| | Code | Standard Pack | Standard Weight in kg | Standard Volume in $m^3$ |
|---|---|---|---|---|
| Straight stairs | **079833** | - | - | - |
| Roman stairs | **079834** | - | - | - |
| Other stairs | **079835** | - | - | - |

Accessories appear on page 291 of the catalogue

## PREMIUM THERMAL COVERS FOR SUMMER

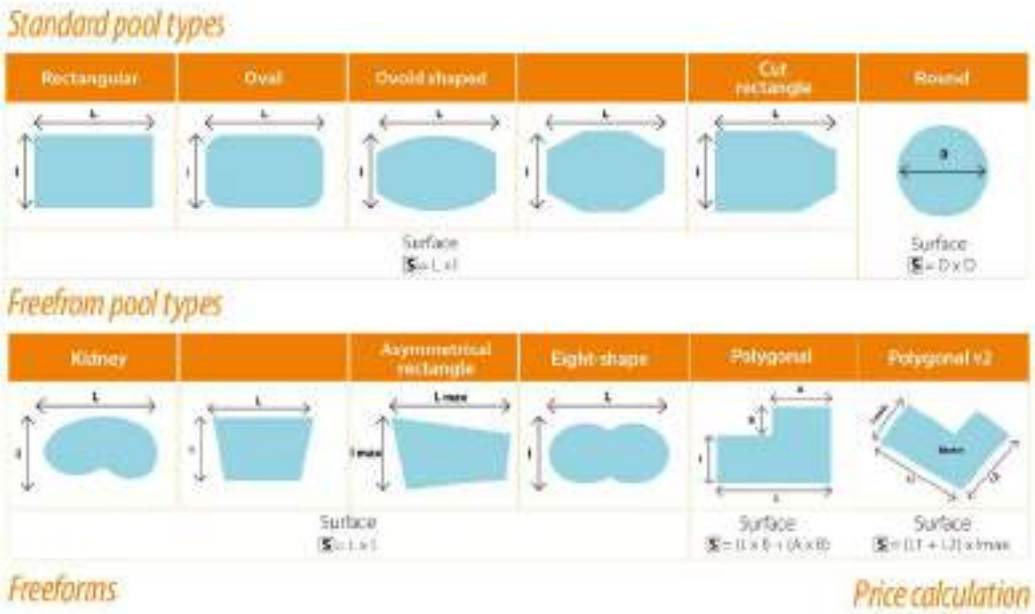


### Freeforms

Any non-standard shape requiring a template for manufacture will be considered free-form.

Describes the basin shape in a rectangle; L is length and I is height.
Surface area: S = L x I

Shapes must be measured correctly for adaption to established templates. If the basin is free-form and standard templates cannot be used, an additional amount will be applied.

Templates must be checked in-factory and with the lines perfectly visible in order to prevent against misinterpretations.

### Price calculation

| |
|---|
| B x Price / m² |
| + Ladder |
| + Cut-out |
| + Transport |
| = Total PRICE |

## THERMAL COVERS - FOAM



FOAM

**Classification: Covers are classified as standard, non-standard or free-form, based on the different shapes defined in the catalogue.**

- **Eco models are trimmed on both width sides.**
- **Deluxe models have a perimeter trim.**

### 5 mm foam model

**Composition:** Material based on cross-linked polyethylene foam.

- **Joint:** Thermal welding with double-sided polyethylene tape.
- **Edges:** Sewn PVC trim.
- **Eco model:** Trimmed on both width sides
- **Deluxe model:** Perimeter trim.
- **Fastening:** Eyelets at either end on primary width side.
  Eyelets approx. every 65 cm on secondary width side.
- **Composition:** Nickel-plated brass eyelet.
- **Option:** Polyethylene foam floating reinforcement on width side.
- **Packaging:** Supplied rolled up with a protective cover.
- **Thickness:** 5 mm.

| | Pool Type | Code | Standard Pack | Standard Weight in kg | Standard Volume in m³ |
|---|---|---|---|---|---|
| Eco Model | Standard | **09297** | - | - | - |
| | Non-standard | **03983** | - | - | - |
| | Freeform | **03992** | - | - | - |
| Deluxe Model | Standard | **09298** | - | - | - |
| | Non-standard | **03991** | - | - | - |
| | Freeform | **03984** | - | - | - |

+ info
PDB
Further information on **PRODUCTS**
www.astralpool.com

# PROTECTION COVERS FOR WINTER

**Attention: Unless specified in the order, the stair cover is supplied welded to the pool cover, applying the corresponding surcharge.**

## Steps and various foam models

| | Code | Standard Pack | Standard Weight in kg | Standard Volume in $m^3$ |
|---|---|---|---|---|
| Straight stairs fixed price | **06215M** | - | - | - |
| Roman stairs fixed price | **06217M** | - | - | - |
| Other stairs fixed price | **06218M** | - | - | - |
| Special cut pieces for stairs | **03993** | - | - | - |
| Additional nickel-plated brass eyelet | **04001** | - | - | - |



BLUE INTERSUP

## PVC Intersup opaque model - blue/ivory

| | Pool Type | Code | Standard Pack | Standard Weight in kg | Standard Volume in $m^3$ |
|---|---|---|---|---|---|
| Eco Model | Standard | **09338** | - | - | - |
| | Freeform | **06198** | - | - | - |
| Deluxe Model | Standard | **09339** | - | - | - |
| | Freeform | **06208** | - | - | - |



BLUE LUXE INTERSUP

## PVC Intersup opaque model - green/ivory

| | Pool Type | Code | Standard Pack | Standard Weight in kg | Standard Volume in $m^3$ |
|---|---|---|---|---|---|
| Eco Model | Standard | **09526** | - | - | - |
| | Freeform | **09528** | - | - | - |
| Deluxe Model | Standard | **09529** | - | - | - |
| | Freeform | **09531** | - | - | - |

## Steps and others for Intersup models

| | Code | Standard Pack | Standard Weight in kg | Standard Volume in $m^3$ |
|---|---|---|---|---|
| Straight stairs fixed price | **05755** | - | - | - |
| Roman stairs fixed price | **05756** | - | - | - |
| Other stairs fixed price | **06219** | - | - | - |
| Special cut pieces for stairs | **03869** | - | - | - |
| Additional nickel-plated brass eyelet | **04001** | - | - | - |

**TECHNICAL SHEET**
**Intersup Eco Covers**

| | |
|---|---|
| Composition | 580 g/$m^2$ double-sided coated PVC fabric. |
| Joints | High frequency welding. |
| Borders | Perimeter fold joined by high frequency weld |
| Fixing | using pairs of nickel-plated brass eyelets<br>+ Double pressed tensor rubber<br>+ S.S. anchoring fixture<br>Distance between rubber tensors = 70 cm<br>Distance between eyelets = approx. 20 cm |
| Grille | Centrally located drainage grid screen in pre-shrunk PVC fabric joined by high frecuency welding |
| Packaging | Supplied in a cardboard box with an instruction handbook. |

**TECHNICAL SHEET**
**Deluxe Intersup Covers**

| | |
|---|---|
| Composition | 580 g/$m^2$ double-sided coated PVC fabric. |
| Joints | High frequency welding. |
| Borders | Perimeter fold joined by high frequency weld |
| Fixing | With straps<br>+ Dynamometric tensor<br>+ S.S. anchoring fixture<br>Separation between tape - approx. 1 m. Overlap - 50 cm |
| Grille | Centrally located drainage grid screen in pre-shrunk PVC fabric joined by high frequency weld |
| Packaging | Supplied in a cardboard box with an instruction handbook. |

## POOL COVER ACCESSORIES

**S.S. Spike - 03994**



**S.S. Spike for lawn - 05732**



**Retractable spike - 40950**



**Concealable anchoring, with spring - 03995**



**Dynamometric spring - 03996**



### Accessories

| | | Code | Standard Pack | Standard Weight in kg | Standard Volume in $m^3$ |
|---|---|---|---|---|---|
| S.S. Spike | Per unit | **03994** | - | - | - |
| S.S. Spike for lawn | Per unit | **05732** | - | - | - |
| Retractable cylindrical spike | Per unit | **40950** | - | - | - |
| Retractable anchoring, with spring | Per unit | **03995** | - | - | - |
| Dynamometric spring | Per unit | **03996** | - | - | - |
| 1.50 m black strap for roller | Per unit | **25980** | - | - | - |
| 8 mm rubber tensor | $m^2$ | **03998** | - | - | - |
| 8 mm x 60 cm Cabiclic rubber tensor | Per unit | **03999** | - | - | - |
| Ø 10 x 80 mm rust-proof sheath | Per unit | **05736** | - | - | - |
| Complete 2 piece hole cover | Per unit | **05734** | - | - | - |
| Fixkit clip with rubber tensor | Per unit | **09439** | - | - | - |

**Roller 1.50 m black strap - 25980**



**8 mm rubber tensor - 03998**



**60 cm Cabiclic rubber tensor - 03999**



**25 cm Cabiclic rubber tensor - 05736**



**Rubber tensor with hooks - 05734**



**Fixkit clip with rubber tensor - 09439**



## REINFORCED PVC PROTECTION COVERS

Safety cover to prevent children under 5 from getting into the pool. Compliant with standard NFP 90-308. For in-ground pool max. 11 x 5 metres (+ ladder). Allow at least 30 cm on each side of the pool (e.g., pool of 10 x 5 metres, cover of 10.60 x 5.60 m). Can be used all year round as it protects the pool from dirt in summer and winter and diminishes the proliferation of bacteria and algae.

### Tramuntana cover

- **Composition:** 580 g/$m^2$ PVC cloth reinforced with aluminium rods approx. every 1.50 m.
- **Joint**: High frequency weld.
- **Edges:** 6 cm double-edge welded along the whole length with anti-lift tapes inside.
- **Reinforce**ments: Anti-abrasion PVC slides in each rod at the level of the coping.
- **Fastenings:** Tapes and stainless steel hooks. Cylindrical stainless steel/aluminium stakes.
- **Drainage:** Holes for draining rainwater across the whole width of each rod.
- **Rolling:** 1 or 2 cranks, depending on cover size.
- **Packaging:** Cardboard and instruction handbook.



| Colour | Code | Standard Pack | Standard Weight in kg | Standard Volume in $m^3$ |
|---|---|---|---|---|
| Blue/Beige | **40939** | - | - | - |
| Green/Beige | **40940** | - | - | - |
| Almond/Beige | **40941** | - | - | - |
| Beige/Beige | **40942** | - | - | - |
| Medium grey / beige | **099025** | - | - | - |

+ info PDB
Further information on **PRODUCTS**
www.astralpool.com

# REINFORCED PVC PROTECTION COVERS



## Reduction gear crank system

A handle is used for pools smaller than 9 m and two handles for pools bigger than 9 m. The handle fits into one of the rods and will allow the cover to be rolled.

| | Code | Standard Pack | Standard Weight in kg | Standard Volume in $m^3$ |
|---|---|---|---|---|
| Demultiplication handle | **41223** | **-** | - | - |

## Steps for Tramuntana cover

| | Code | Standard Pack | Standard Weight in kg | Standard Volume in $m^3$ |
|---|---|---|---|---|
| Fixed price straight steps | **40947** | **-** | - | - |
| Trim for steps | **40948** | - | - | - |
| Profile for wide steps | **42411** | - | - | - |





# STORAGE ROLLERS FOR COVERS

## Central pipe in anodized aluminium



Covers max. length: 15 m

Other lengths, available on request

| | Code | Standard Pack | Standard Weight in kg | Standard Volume in $m^3$ |
|---|---|---|---|---|
| **Ø 100 mm** | | | | |
| Fixed pipe, length 4.5 m | **07622** | 1 | 12.0 | 0.059 |
| Fixed pipe, length 5.5 m | **07623** | 1 | 14.3 | 0.071 |
| Fixed pipe, length 6.6 m (2 rubber bands included) | **07624** | 1 | 17.4 | 0.084 |
| Telescopic pipe, length 4 - 5.5 m | **07625** | 1 | 12.8 | 0.054 |
| Telescopic pipe, length 5 - 6.6 m | **07626** | 1 | 15.5 | 0.067 |
| **Ø 80 mm** | | | | |
| Telescopic pipe, length 4 - 5.5 m | **24762** | 1 | 10.3 | 0.035 |
| Telescopic pipe, length 5 - 6.6 m | **30806** | 1 | 12.3 | 0.043 |



Covers max. length: 15 m

**Fixed pipe**

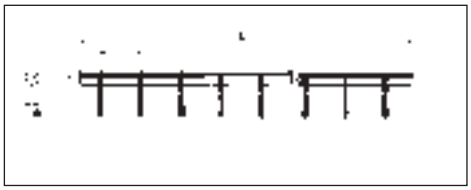

| Pipe code | L (m) | Ø B (mm) | Nº straps |
|---|---|---|---|
| **07622** | 4.5 | 100 | 8 |
| **07623** | 5.5 | 100 | 8 |
| **07624** | 6.6 | 100 | 10 |

**Telescopic pipe**

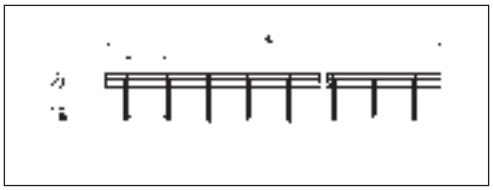

| Pipe code | L (m) | Ø B (mm) | Nº straps |
|---|---|---|---|
| **07625** | 4.0 - 5.5 | 95/100 | 8 |
| **07626** | 5.0 - 6.6 | 95/100 | 8 |
| **24762** | 4.0 - 5.5 | 75/80 | 8 |
| **30806** | 5.0 - 6.6 | 75/80 | 8 |

## Stainless Steel mobile support



Covers max. length: 15 m

Tube shown in the photo not included in supply

A set of 2 supports, one "T" end fixed support and the other end support with wheels. Includes 8 straps to tie the cover.

| | Code | Standard Pack | Standard Weight in kg | Standard Volume in $m^3$ |
|---|---|---|---|---|
| Supports in AISI-304 | **07628** | 1 | 7.2 | 0.035 |

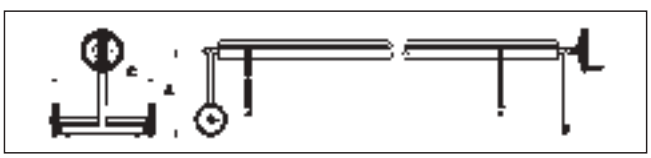

| Code | A (mm) | C (mm) |
|---|---|---|
| **07628** | 500 | 650 |

+ info PDB
Further information on **PRODUCTS**
www.astralpool.com

# STORAGE ROLLERS FOR COVERS



## Stainless Steel fixed end brackets

Set of 2 brackets in "T" shape in AISI-304. Includes steering wheel operation with 8 straps for fixing the cover.

| | Code | Standard Pack | Standard Weight in kg | Standard Volume in $m^3$ |
|---|---|---|---|---|
| A set of 2 "T" brackets | **07631** | 1 | 4.8 | 0.035 |

**Tube shown in the photo not included in supply**

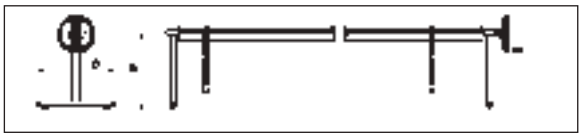

| Pipe code | A (mm) | C (mm) |
|---|---|---|
| **07631** | 500 | 514 |



## Fixed support for roller

Two flange fixing supports with adjustable height from 500-800 mm in AISI-304. Fixed to the floor with flanges. Includes 8 straps for fixing the cover.

| | Code | Standard Pack | Standard Weight in kg | Standard Volume in $m^3$ |
|---|---|---|---|---|
| Supports in AISI-304 | **07629** | 1 | 7.2 | 0.029 |

**Tube shown in the photo not included in supply**

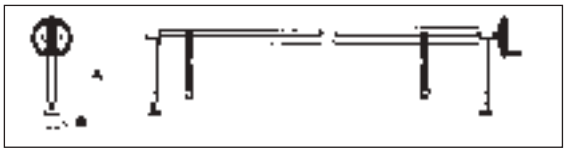

| Code | A (mm) | B (mm) |
|---|---|---|
| **07629** | 500 to 800 | 100 |



## Wall support for roller

Pair of wall fixing supports. In S.S. AISI-304. Includes 8 straps for fixing the cover.

| | Code | Standard Pack | Standard Weight in kg | Standard Volume in $m^3$ |
|---|---|---|---|---|
| Supports in AISI-304 | **07630** | 1 | 6.6 | 0.087 |

**Tube shown in the photo not included in supply**

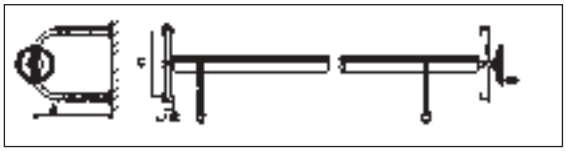

| Code | A (mm) | B (mm) | C (mm) |
|---|---|---|---|
| **07630** | 500 | 100 | 500 |

## STORAGE ROLLERS FOR COVERS



### Roller supports for larger pools

Suitable for fixed roller pipes 07622, 07623 and 07624 or telescopic pipes 07625 and 07626, with 1, 2 or 3 rollers and steering wheels and rotating bar wheel for handling covers. Contains of 2 Stainless Steel AISI-304 structures with wheels (1 set with brakes) to move the roller. Includes 8 straps per roller.

| | Code | Standard Pack | Standard Weight in kg | Standard Volume in $m^3$ |
|---|---|---|---|---|
| 2 mobile supports with 1 roller pipe | **15836** | 1 | 36.4 | 0.937 |
| 2 mobile supports with 2 roller pipes | **15835** | 1 | 27.4 | 1.46 |
| 2 mobile supports with 3 roller pipes | **15834** | 1 | 28.4 | 1.46 |

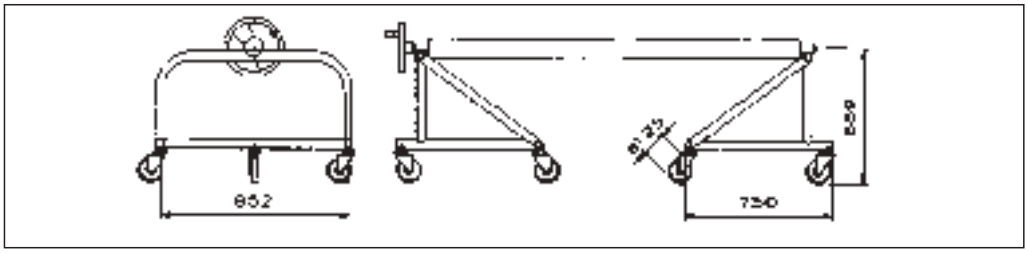


**Mobile supports with 1 pipe. - Dimensions in mm.**

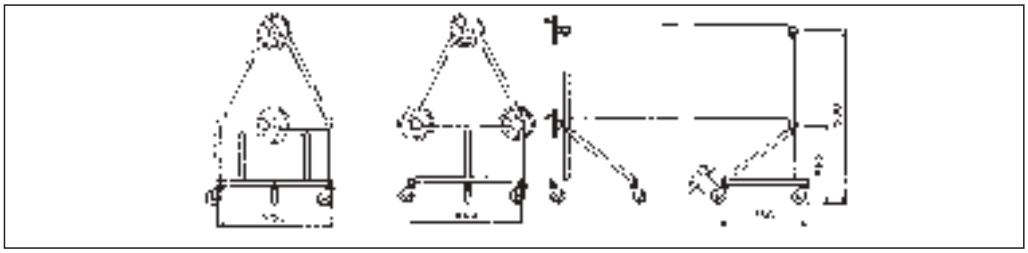

**Mobile supports with 2 and 3 roller pipes. - Dimensions in mm.**

# AUTOMATIC COVERS

## The AstralPool automatic cover

AstralPool is continually incorporating the latest innovations to its products in matters of safety. As such the automatic pool covers have been developed to meet the demands of the French standard NF P90 308, which guarantees maximum user safety.

The AstralPool automatic covers cover the whole pool and are easily rolled up or spread thanks to their built-in motorized roller. The turning of a key is all that is needed to get it working.

Manufactured in rigid slats available in various colours, the design and composition produce a floating cover that fits over the entire pool and makes for very effective heat insulation. We have seven models to cover the equipment needs of new and existing pools: the submerged Roussillon models, the above-ground Carlit models and the above-ground model with a bench, Capcir.

Roussillon submerged automatic models allow for seamless integration with the pool. The roller mechanism is located in a separate sunken compartment sectioned off from the pool by a brick or PVC panel.

The above-ground models (Carlit) are ideal for already existing pools as the winding shaft is fastened in place to the pool decking.

The above-ground models with protective casing (Narbonne) are the basic above-ground models which can be complemented with a bench that covers the mechanical installation, giving it a high-quality finish. For installation in existing swimming pools.

## Main advantages

- Increased safety in the swimming pool to protect people and pets from falling accidentally into it. The floating slats cover the entire water surface.*
- Very convenient to use, the swimming pool is covered and uncovered in silence by simply turning a key.
- Represents considerable savings:
    - It acts as a thermal barrier preventing heat losses and extending the pool use season.
    - It is a basic complement for pool heating.
    - It prevents evaporation, therefore it saves water.
    - It reduces algae formation, which results in an important saving in chemical products.
- In indoor pools no condensation is produced in the enclosed hall, thus avoiding deterioration of building materials.
- Lower maintenance costs: reduction of suspended particles.
- The automatic cover enables greater customisation of the swimming pool, increasing its value.

## AstralPool service

- The wide AstralPool commercial network offers immediate service.
- We offer our clients pre- and post-sales technical assessment.
- The manufacturing technical sheet will be used to make a cover which is perfectly adapted to your needs.
- All AstralPool covers undergo strict quality control based on the most demanding regulations.
- Assembly and Civil Engineering Manuals are available to allow building the swimming pool with the ideal requirements for subsequent installation of the submerged cover.

(*) Our automatic covers comply with the requirements of the French standard NF P90-308 which demands the use of standardized safety mechanisms to prevent the risk of drowning by accidental falls into the pool.

# AUTOMATIC COVERS

## Advice for use and winterizing

**We recommend to follow these basic indications to obtain the optimum performance from the automatic cover:**

- Before operating the cover you must ensure that nobody is in the swimming pool and that there are no objects that could become obstacles to its normal operation.
- Maintaining the correct water level is also important, as a level which is too high or too low can cause blockages at the tie beam, partition or the steps.
- During the retrieving and expanding operations the cover should not be blocked, as this action could be dangerous as well as harmful to the operating mechanism.
- If an automatic pool floor cleaner is used make sure that when the cover is extended neither the hose nor the power supply cable is caught up.
- Regular cleaning of the cover with a pressure cleaning device or with a PVC descaling liquid is recommended. This will also prevent leaves from settling on the cover which could otherwise stain the slats.
- In the case of a hail storm we recommend that you retrieve the cover.
- In the Roussillon submerged model we recommend that you always keep the motor housing dry to prevent the geared motor from getting wet.

**For good winterization, and in order to find the pool in the best conditions in the spring, we recommend to follow the following indications:**

- Leave the cover extended over the water surface.
- Keep the water level constant. An excess should be drained through the main drain or the skimmer box.
- It is advisable to clean the trapdoor and the motor housing with a high pressure cleaner before the pool is winterized.
- Place a number of anti-freeze floats in the trapdoor casing, behind the cover. The skimmers should also be protected in the same way.
- We recommend the installation of a plastic type cover to prevent leaves and other substances from obstructing the trapdoor, which should be cleaned regularly.
- In the case of freezing, avoid forcing or pressing down hard on the slats as they could be damaged.
- If the motor is in risk of flooding it is advisable to cut off the power supply and remove the motor.



## Automatic cover price calculation

### How to calculate the price of an above-ground cover

The basic elements to calculate the above-ground cover are:

1. Mechanical kit
2. Slats
3. Ladder
4. Safety system
5. Postage and packaging

### How to calculate the price of a submerged cover

The basic elements to calculate the submerged cover are:

1. Mechanical kit
2. Embedding kit
3. Tie beam and brackets
4. Kink-proof bracket (when necessary)
5. Partition and brackets
6. Slats
7. Ladder
8. Safety system
9. Postage and packaging

## AUTOMATIC COVERS: ABOVE-GROUND MODELS

New

### Zen'It bench



**The new AstralPool ZEN'IT** bench fits any above-ground automatic covers.

**Original 3 in 1:** to cover the roller and the stander, to store equipment, to add value to the pool. Bench manufactured with quality materials in powder-coated aluminium, Stainless steel and exotic wood.

Easy-to-mount, in kit. No handling equipment necessary.

Length of 1 module: 1,2 m

Max. Length of the cover: 9 m with special roller stander.

Sold with or without above-ground roller – contact us for more info.

- **Trendy design**
- **Supplied in kits, easy-to-mount**
- **Multi-purpose**



**Access to the skimmers and mechanical parts**

## Different finishes available

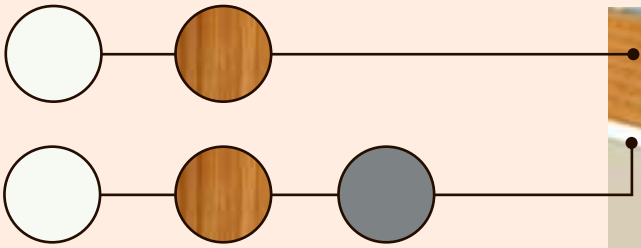



**With storage area**

## Overall dimensions

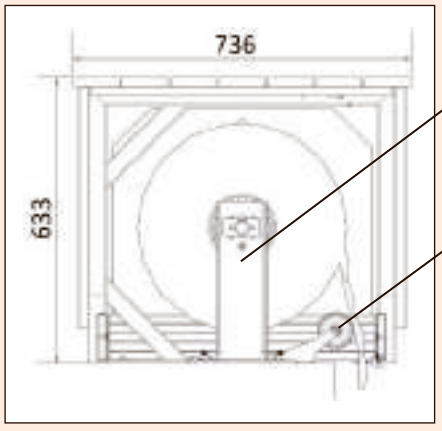


Space saving stander, reducing the footprint of the roller

Guiding system: reduced footprint over the pool



Complete bench shipped on a Euro pallet

Mounting time: 30 min/module
No need for handling equipment

| Number of modules | 3 | 4 | 5 | 6 |
|---|---|---|---|---|
| Total bench length | 3.56 m | 4.77 m | 5.97 m | 7.17 m |
| Max pool width | 3.01 m | 4.22 m | 5.42 m | 6 m |

# AUTOMATIC COVERS: ABOVE-GROUND MODELS





## N-Carlit above-ground model

Automatic above-ground cover perfect for existing pools with limit switch up to:
- 3 x 18 m + stairs
- 4 x 17 m + stairs
- 5 x 17 m + stairs
- 6 x 16 m + stairs
- up to 7 x 14 m plus ladder

Note that as it is an above-ground model cover, the storage rollers must be placed out of the pool, fixed to the floor.

**MECHANICAL KIT:**

Consists of:
- Two white or sand stainless steel stands.
- Ø 146 mm anodized aluminium roller shaft.
- 24V tubular motor with limit switch adjustment.
- Key switch with self-return to 0 point.
- Switchboard with 220/24V transformer.



| | Width | 3,03 m | | | 4,03 m | | | 5,03 m | | |
|---|---|---|---|---|---|---|---|---|---|---|
| | LENGTH | Axis | Ref. | Code | Axis | Ref. | Code | Axis | Ref. | Code |
| White / Black | length <= 8 m | alu ø146 | 061357 | **54136** | alu ø146 | 061357 | **54136** | alu ø146 | 070207 | **070207** |
| | 8 m < length <= 10 m | | 061357 | **54136** | | 061357 | **54136** | | 061359 | **54138** |
| | 10 m < length <= 11 m | | 061357 | **54136** | | 070206 | **070206** | | 061359 | **54138** |
| | 11 m <long <= 12 m | | 061357 | **54136** | | 070206 | **070206** | | 061359 | **54138** |
| | 12 m < length <= 13 m | alu ø196 | 061358 | **54137** | alu ø196 | 061358 | **54137** | alu ø196 | 061360 | **54139** |
| | 13 m < length <= 15 m | | 061358 | **54137** | | 061358 | **54137** | | 061363 | **54142** |
| | 15 m < length <= 17 m | | 061358 | **54137** | | 061362 | **54141** | | 061363 | **54142** |
| White - White | length <= 8 m | alu ø146 | 061367 | **54146** | alu ø146 | 061367 | **54146** | alu ø146 | 070209 | **070209** |
| | 8 m < length <= 10 m | | 061367 | **54146** | | 061367 | **54146** | | 061369 | **54148** |
| | 10 m < length <= 11 m | | 061367 | **54146** | | 070208 | **070208** | | 061369 | **54148** |
| | 11 m < length <= 12 m | | 061367 | **54146** | | 070208 | **070208** | | 061369 | **54148** |
| | 12 m < length <= 13 m | alu ø196 | 061368 | **54147** | alu ø196 | 061368 | **54147** | alu ø196 | 061370 | **54149** |
| | 13 m < length <= 15 m | | 061368 | **54147** | | 061368 | **54147** | | 061373 | **54152** |
| | 15 m < length <= 17 m | | 061368 | **54147** | | 061372 | **54151** | | 061373 | **54152** |
| White - Sand | length <= 8 m | alu ø146 | 061426 | **66090** | alu ø146 | 061426 | **66090** | alu ø146 | 070227 | **66096** |
| | 8 m < length <= 10 m | | 061426 | **66090** | | 061426 | **66090** | | 061429 | **061429** |
| | 10 m < length <= 11 m | | 061426 | **66090** | | 070226 | **070226** | | 061429 | **061429** |
| | 11 m < length <= 12 m | | 061426 | **66090** | | 070226 | **070226** | | 061429 | **061429** |
| | 12 m < length <= 13 m | alu ø196 | 061427 | **66091** | alu ø196 | 061427 | **66091** | alu ø196 | 061430 | **66094** |
| | 13 m < length <= 15 m | | 061427 | **66091** | | 061427 | **66091** | | 061431 | **66095** |
| | 15 m < length <= 17 m | | 061427 | **66091** | | 061428 | **66092** | | 061431 | **66095** |
| | Width | 6,03 m | | | 7,03 m | | | 7,50 m | | |
| | LENGTH | Axis | Ref. | Code | Axis | Ref. | Code | Axis | Ref. | Code |
| White - Black | length <= 14 m | alu ø196 | 061361 | **54140** | alu ø196 | 061366 | **54145** | alu ø196 | 070300 | **66287** |
| | 14 m < length <= 16 m | | 061361 | **54140** | | 070302 | **66100** | | 070301 | **66288** |
| | 16 m < length <= 17 m | | 070303 | **66097** | | 070302 | **66100** | | 070301 | **66288** |
| White - White | length <= 14 m | | 061371 | **54150** | | 061376 | **54155** | | 070296 | **66289** |
| | 14 m < length <= 16 m | | 061371 | **54150** | | 070298 | **66285** | | 070297 | **66290** |
| | 16 m < length <= 17 m | | 070299 | **66098** | | 070298 | **66285** | | 070297 | **66290** |
| White - Sand | length <= 14 m | | 061432 | **66293** | | 061433 | **66294** | | 070308 | **66291** |
| | 14 m < length <= 16 m | | 061432 | **66293** | | 070310 | **66286** | | 070309 | **66292** |
| | 16 m < length <= 17 m | | 070311 | **66099** | | 070310 | **66286** | | 070309 | **66292** |

## AUTOMATIC COVERS: ABOVE-GROUND MODELS





### Carlit Solar Pool cover

The automatic solar pool cover Carlit runs on solar energy, making it a very environmentally-friendly product. It reduces water evaporation and heat loss in your pool. The cover also minimizes premature evaporation of pool chemicals. Certified by the French standard NF 90-308, the Carlit solar pool cover guarantees higher quality, reducing possible accidents arising from children, animals, or objects falling into the water.

**Main advantages:**

- Simplified installation, no wiring required (power supply via solar energy).
- 40-cycle independence: once the battery is fully charged, in the absence of further light the cover can be extended and 40-cycle autonomy: once the battery is charged and in absence of light, you can open and close the cover 40 times.
- Easy to use cover with low maintenance costs.

**General features:**

- Covers pools up to 6 x 12m with a ladder.
- Solar-powered roller. One bracket fitted with a photovoltaic cell.
- Tubular 60 Nm or 120 Nm 24 V depending of the dimensions of the pool geared motor. Anodized aluminium pipe.
- Mechanical limit switch.
- Four different colours for slats and caps: white, sand, grey and medium grey.
- Two 12 volt batteries.

| Mechanical kit | Code |
|---|---|
| Mechanical kit up to 4 m (up to 4 x 12 m) | **35917** |
| Mechanical kit up to 5 m (up to 5 x 12 m) | **35918** |
| Mechanical kit up to 6 m (up to6 x 12 m) | **35919** |

# AUTOMATIC COVERS: ABOVE-GROUND MODELS



## Borna municipal model

It is intended to be installed in municipal indoor or outdoor pools of 12.5 x 25 meters maximum. It can be used for bubble or reinforced polyethylene foam covers. The distance between the roller shaft and the pool edges must be reduced as much as possible to prevent abnormal wear and tear due to the friction on the coping.

**Technical features:**

- 250 Nm 24V motor.
- 300 mm stainless steel shaft.
- Thermoplastic bushing with stainless steel bearing.
- Stand with a protective layer in thermoformed ABS.
- Remote control + Key.

| | Code | Standard Pack | Standard Weight in kg | Standard Volume in $m^3$ |
|---|---|---|---|---|
| Mechanical kit up to 12.5 m (max. 12.5 x 25 m) | **38734** | - | - | - |



## Double municipal model

Makes it possible to cover municipal pools up to 15 x 25 m with bubble or polyethylene foam covers. 6.03 x 25 m.

**Technical features:**

- 2 x 120 Nm 24V tubular motors.
- 2 aluminium shafts.
- 6 wheels.
- Remote control + Key

| | Code | Standard Pack | Standard Weight in kg | Standard Volume in $m^3$ |
|---|---|---|---|---|
| Width ≤6.03m Length ≤ 25m | **41441** | - | - | - |
| Width ≤8.03m Length ≤ 25m | **41442** | - | - | - |

# AUTOMATIC COVERS: SUBMERGED MODELS



## Roussillon submerged model: dry well motor

The Roussillon automatic cover is the submerged model which incorporates the motor in a separate sunken compartment and both the winding shaft as well as the cover are housed inside the pool at one end. The Roussillon model can cover an indoor pool up to 11 x 20 m².

The submerged pit containing the roller shaft from the main pool should be separated from the main pool by a small concrete partition at the time of construction or with a PVC partition later on.
The basic elements for assembling the cover are the slats, the step slats, the mechanical kit, the embedding kit, the aluminium tie beam and the pit cover.



24 V geared motor



220/24 V switchboard

**Solution valid for a mechanical installation up to a maximum depth of 55 cm of the water level. For greater depths, please enquire.**

### MECHANICAL KIT

Includes the following elements:

- Extruded aluminium or stainless steel shaft.
- Motor stand.
- Watertight gaskets on bushing side.
- Watertight gaskets on bearing stand side.
- 24V reducer motor with stainless steel stand.
- 220/24V standard switchboard.
- On-off key switch with key. Should be installed in full view of the pool. Works by continuous turning of the key.

Embedding kit for a standard installation 55 cm above the water level.
Should the shaft have to be installed at a greater height, please consult us.



Extruded aluminium shaft



On-off key switch

### ROUSSILLON DRY WELL (EMBEDDING KIT 210 mm DRIVE SHAFT 500 mm)

| Width | 3.03 m | | | 4.03 m | | | 5.03 m | | | 6.03 m | | |
|---|---|---|---|---|---|---|---|---|---|---|---|---|
| LENGTH | Axis | Ref. | Code | Axis | Ref. | Code | Axis | Ref. | Code | Axis | Ref. | Code |
| 4 m - 12 m | ø146 | 060465 | **31144** | ø146 | 060465 | **31144** | ø146 | 060467 | **31145** | ø196 | 060468 | **31146** |
| 13 m - 15 m | | | | | | | ø196 | 060468 | **31146** | | | |
| 16 m - 19 m | | | | ø196 | 061011 | **43221** | | | | | | |
| 20 m | | | | | | | | | | ø196 | 070442 | 070442 |
| **Width** | **7,03 m** | | | **8,03 m** | | | **9.03 m - 11.03 m** | | | | | |
| **LENGTH** | **Axis** | **Ref.** | **Code** | **Axis** | **Ref.** | **Code** | **Axis** | **Ref.** | **Code** | | | |
| 4 m - 10 m | ø196 | 060466 | **31904** | ø196 | 060470 | **31909** | ø300 | 070440 | 070440 | | | |
| 11 m - 13 m | | | | ø196 | 070444 | 070444 | | | | | | |
| 14 m - 15 m | | | | | | | ø300 | 060570 | **34767** | | | |
| 16 m - 17 m | ø196 | 070443 | 070443 | ø300 | 070441 | 070441 | | | | | | |
| 18 m - 20 m | ø300 | 070441 | 070441 | | | | | | | | | |

### ROUSSILLON DRY WELL (EMBEDDING KIT 310mm DRIVE SHAFT 600 mm)

| Width | 3.03 m | | | 4.03 m | | | 5.03 m | | | 6.03 m | | |
|---|---|---|---|---|---|---|---|---|---|---|---|---|
| LENGTH | Axis | Ref. | Code | Axis | Ref. | Code | Axis | Ref. | Code | Axis | Ref. | Code |
| 4 m - 12 m | ø146 | 060351 | **31144-001** | ø146 | 060351 | **31144-001** | ø146 | 060352 | **31145-001** | ø196 | 060353 | **31146-001** |
| 13 m - 15 m | | | | | | | ø196 | 060353 | **31146-001** | | | |
| 16 m - 19 m | | | | ø196 | 060363 | **31144-004** | | | | | | |
| 20 m | | | | | | | | | | ø196 | 070445 | 070445 |
| **Width** | **7,03 m** | | | **8,03 m** | | | **9.03 m - 11.03 m** | | | | | |
| **LENGTH** | **Axis** | **Ref.** | **Code** | **Axis** | **Ref.** | **Code** | **Axis** | **Ref.** | **Code** | | | |
| 4 m - 10 m | ø196 | 060354 | **31904-001** | ø196 | 060355 | **31909-001** | ø300 | 060848 | 060848 | | | |
| 11 m - 13 m | | | | ø196 | 070447 | 070447 | | | | | | |
| 14 m - 15 m | | | | | | | ø300 | 060381 | **31904-007** | | | |
| 16 m - 17 m | ø196 | 070446 | 070446 | ø300 | 060847 | 060847 | | | | | | |
| 18 m - 20 m | ø300 | 060847 | 060847 | | | | | | | | | |

NON-WATERTIGHT MOTOR. Optional installation of a watertight motor.
WATERTIGHT MOTOR AND DISENGAGEABLE DRIVE.

## AUTOMATIC COVERS: SUBMERGED MODELS

### Roussillon submerged model: dry well motor



310 mm wall conduit



Bearing bracket for recessed assemblies



Part to be recessed for tie beam support bracket

**EMBEDDING KIT**

Includes the following elements:

- Bushing.
- Bearing support bracket for embedding.
- Parts to be recessed (2) for tie beam support bracket
- Watertight gaskets for bushing.

| EMBEDDING KIT | Code |
|---|---|
| With 110 mm wall conduit | **33075** |
| With 210 mm wall conduit | **31143** |
| With 310 mm wall conduit | **33074** |

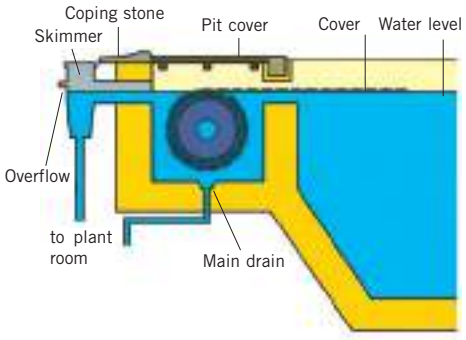


### ROUSSILLON MODEL ASSEMBLY DRAWING

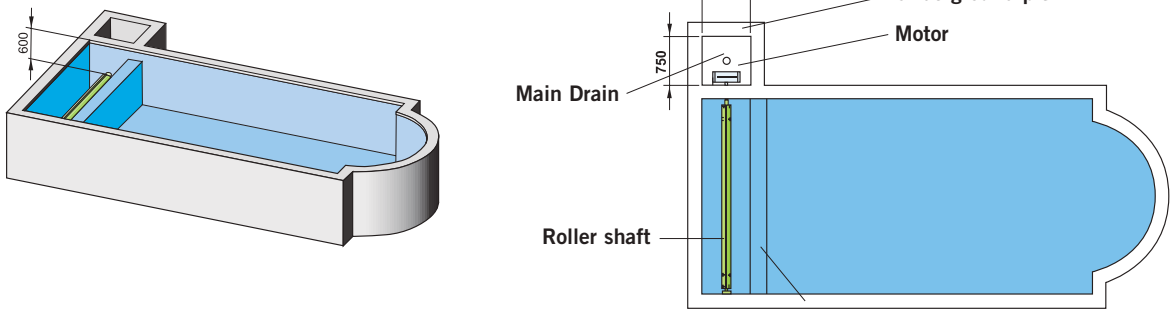


### Watertight bushing

+ info

For further information see the AstralPool product database in the PRODUCTS section at www.astralpool.com.

# AUTOMATIC COVERS: SUBMERGED MODELS

## Roussillon submerged model



### KINK-PROOF SUPPORT FOR EMBEDDED BEAM

| KINK-PROOF SUPPORT TO BE MOUNTED ON WALL | |
|---|---|
| **DIMENSION of pit cover in mm** | **Code** |
| 615 ≤ Dim. ≤ 1015 | **61678** |
| 1016 ≤ Dim. ≤ 1460 | **61682** |

Supports must be used if the inner width of the pool shell is > 4 m.
The number of supports to be used is set out in the table below.

| PRACTICAL INFORMATION | | |
|---|---|---|
| **Pool shell width** | **Number of beams required** | **Number of kink-proof supports required** |
| Width ≤ 4 m | 1 beam | 0 |
| 4 m ≤ Width ≤ 6.03 m | 1 beam | 1 |
| 6.03 m ≤ Width ≤ 8.03 m | 1 beam | 2 |
| 8.03 m ≤ Width ≤ 9.03 m | 1 beam of 4 m + 1 beam of 5 m | 3 |
| 9.03 m ≤ Width ≤ 10.03 m | 2 beams of 5 m | 3 |
| 10.03 m ≤ Width ≤ 11.03 m | 2 beams of 6 m | 4 |

### SAFETY SYSTEMS

Place the safety system on the shaft side and the step side IF THE DEPTH between the water level and pit cover is > 20 cm.

**The pool may have beams on the corners of a maximum of 4 cm, in compliance with standard NF 90-308.**

**In the case of larger beams, the beam of the wall side must be brought forward by the same distance.**

**The clearance between the wall and the beam must be greater than 7 cm, otherwise it will not comply with standard NF 90-308.**

**Diagram of the pit**

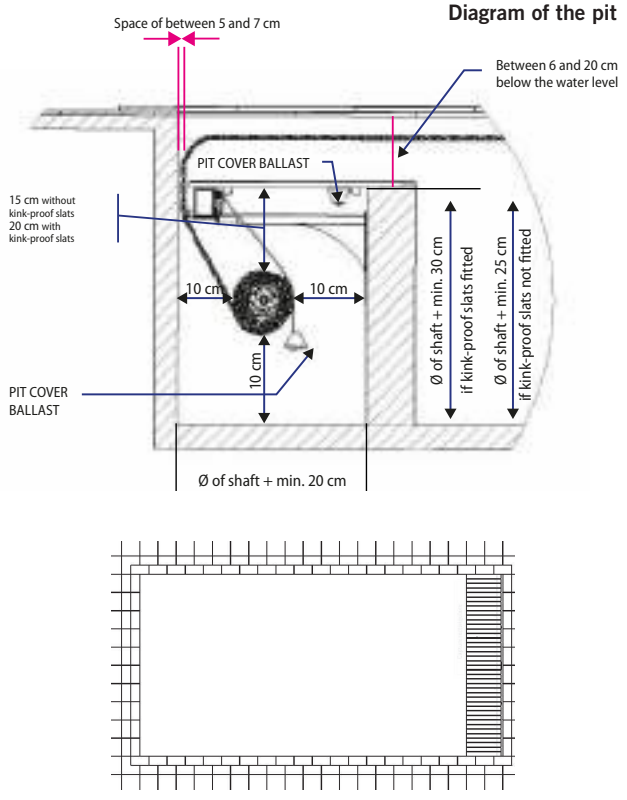


**Dimensions to be taken into account**

A space measuring the height of at least the diameter of the cover when rolled plus 30 cm must be left free.

The inner width of the pit must be wider than the diameter of the shaft plus 20 cm (see diagram).

The clearance for the cover between the wall and the back of the pit cover must be between 5 and 7 cm, in compliance with standard NF 90-308.

The depth of the pit cover is up to the user. It should be at least 6 cm so that the cover works properly, and a maximum of 20 cm, in compliance with standard NF 90-308.

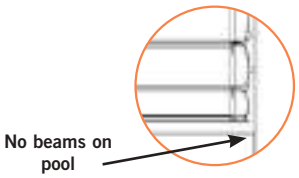

# AUTOMATIC COVERS: SUBMERGED MODELS



## Roussillon submerged model: motor in the shaft

The motor is integrated inside the winding shaft and can be installed in already-built pools up to 8 metres wide.

It can cover an indoor pool up to 8 x 12 m.

As in the Roussillon model the submerged part containing the roller shaft should be separated by a small concrete partition at the time of construction or later with a PVC partition. The slat colours available for both models are white, beige and opaque blue.

The Conflent mechanism may be fitted:
- Below the coping stone.
- Against the wall.



**Mechanical system**

| Max. pool dimensions | Motor | Code |
|---|---|---|
| Pool 4 x 12 m | (shaft with limit switch) | **33070** |
| Pool 5 x 12 m | (shaft with limit switch) | **33072** |
| Pool 6 x 12 m | (shaft with limit switch) | **33073** |
| Pool 7 x 14 m | (shaft with limit switch) | **33906** |

**Solution valid for a mechanical installation up to a maximum depth of 55 cm of the water level. For greater depths, please enquire.**



## Roussillon submerged model: motor at water level

This submerged automatic cover is specially designed for new-build or existing pools up to 6 metres wide. The IP68 motor (watertight) is situated above the water level and below the lid => easy motor access => better maintenance.

The submerged zone containing the roller shaft can be separated by a small concrete partition at the time of construction or with a PVC partition later on.

It has the same technical features as the dry well Roussillon motor: Easy to install in existing and new-build pools. Seamless integration with pool surround. Easy maintenance as the motor is situated at the water level.

The mechanics are made up of:
- 150 Nm motor equipped with a limit switch system.
- 2 stainless steel brackets: bearing part and motor part with only the gear transmission.
- A 220 V/24 V power supply unit with a remote key switch.

| Width | 3.07 m | | | 4.07 m | | |
|---|---|---|---|---|---|---|
| **LENGTH** | **Axis** | **Ref.** | **Code** | **Axis** | **Ref.** | **Code** |
| **long < 15 m** | alu ø146 | 060335 | **33759** | alu ø146 | 060335 | **33759** |
| **15 m < long < = 18 m** | alu ø146 | 060335 | **33759** | - | - | **-** |
| **Width** | **5.07 m** | | | **6.07 m** | | |
| **LENGTH** | **Axis** | **Ref.** | **Code** | **Axis** | **Ref.** | **Code** |
| **length < 12 m** | alu ø146 | 060337 | **33760** | alu ø196 | 060339 | **33761** |
| **12 m < long < = 14 m** | alu ø196 | 060339 | **33761** | - | - | **-** |

WATER LEVEL NEEDED: 120 mm from the pool border.



Stainless Steel bracket

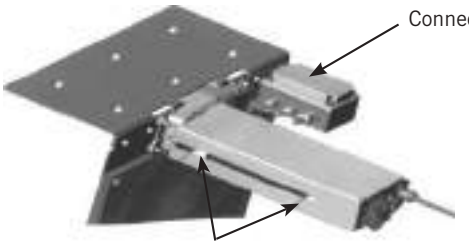

## AUTOMATIC COVERS: SUBMERGED MODELS







### Roussillon submerged deck model

**Embedded pit covers : 2 SOLUTIONS**

**Solution 1: WOODEN PIT COVERS**

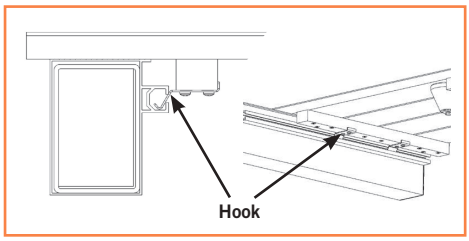




- Specific to this solution as they are ballasted not to float.
- A hook should be fastened to each slat. The hooks should be inserted into the groove on the beam so that they do not move out of place.
- Wooden pit covers are delivered in 500 cm wide sheets.

| Size | Code |
|---|---|
| 700 mm x 1000 mm | **61826** |
| 950 mm x 1000 mm | **61801** |
| Made to measure | **61816** |

**Solution 2: STAINLESS STEEL PIT COVERS / BEAMS**

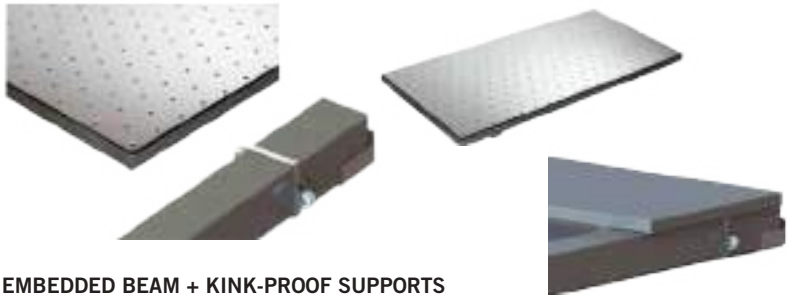

**EMBEDDED BEAM + KINK-PROOF SUPPORTS**

Embedded beam + 2 beam support housings.

- Available in white only.
- 80 x 120 mm cross-section.
- In aluminium with PVC sleeve.
- Weight of 5.4 kg/ml.





| Max. inner shell width | Code |
|---|---|
| Width ≤ 4,03 m | **61806** |
| 4 m ≤ Width ≤ 5,03 m | **61807** |
| 5m ≤ Width ≤ 6,03 m | **61808** |
| 6 m ≤ Width ≤ 7,03 m | **61809** |
| 7 m ≤ Width ≤ 8,03 m | **61810** |
| **Optional** | |
| 2 embedment plates for assembly to beam support housings | **70264** |



**70264**

**Solution 3: COMPARTMENT COVER IN PVC**

**For more information see the AstralPool product database in the PRODUCTS section at www.astralpool.com.**

## AUTOMATIC COVERS: DISPLAY MODELS

### Carlit Solar display model (without motor)



Width: 1.5 metres with blue, white and sand colour slats.

| Code | Standard Pack | Standard Weight in kg | Standard Volume in $m^3$ |
|---|---|---|---|
| **38740** | 1 | - | - |

### N-Carlit display model (without motor)

Width: 1.5 metres with blue, white and sand colour slats.

| Code | Standard Pack | Standard Weight in kg | Standard Volume in $m^3$ |
|---|---|---|---|
| **061624** | 1 | - | - |

## AUTOMATIC COVERS: SUBMERGED MODELS

### Submerged models: Accessories

**THE TIE BEAM**

Its function is to provide support to the pit cover. Manufactured in white coated aluminium, it measures 100 x 110 mm and weighs 9 kg/ml.

This tie beam is delivered with coated stainless steel support bracket and stainless steel nuts and bolt.



Beam standard bracket



Beam adjustable bracket



Vertical tie-beam bracket for liner



Wall tie-beam bracket

| Beam length | Tie beam code 100 x 110 | Tie beam code 100 x 70 |
|---|---|---|
| **White beam + Standard bracket** | | |
| UP TO 4 meters | **31148** | - |
| From 4 m to 5 m | **31149** | - |
| From 5 m to 6 m | **31150** | - |
| From 6 m to 7 m | **31911** | - |
| From 7 m to 8 m | **31912** | - |
| **Sand beam + Standard bracket** | | |
| UP TO 4 meters | **38529** | - |
| From 4 m to 5 m | **38530** | - |
| From 5 m to 6 m | **38531** | - |
| From 6 m to 7 m | **38532** | - |
| From 7 m to 8 m | **38533** | - |
| **White beam + Stand for liner holding vertical profiler** | | |
| UP TO 4 meters | **33870** | - |
| From 4 m to 5 m | **33871** | - |
| From 5 m to 6 m | **33872** | - |
| From 6 m to 7 m | **33873** | - |
| From 7 m to 8 m | **33886** | - |
| **Sand beam + Stand for liner holding vertical profile** | | |
| UP TO 4 meters | **38534** | - |
| From 4 m to 5 m | **38535** | - |
| From 5 m to 6 m | **38536** | - |
| From 6 m to 7 m | **38537** | - |
| From 7 m to 8 m | **38538** | - |
| **White beam + Support bracket for fastening to the pool wall** | | |
| UP TO 4 meters | **33874** | **56063** |
| From 4 m to 5 m | **33875** | **56064** |
| From 5 m to 6 m | **33876** | - |
| **Sand tie beam + Bracket to fasten to pool wall** | | |
| UP TO 4 meters | **38544** | **56065** |
| From 4 m to 5 m | **38545** | **56066** |
| From 5 m to 6 m | **38546** | - |
| **White beam + Adjustable bracket** | | |
| UP TO 4 meters | **35717** | **56057** |
| From 4 m to 5 m | **35718** | **56058** |
| From 5 m to 6 m | **35719** | - |
| From 6 m to 7 m | **35720** | - |
| From 7 m to 8 m | **35721** | - |
| **Sand beam + Adjustable bracket** | | |
| UP TO 4 meters | **38539** | **56059** |
| From 4 m to 5 m | **38540** | **56060** |
| From 5 m to 6 m | **38541** | - |
| From 6 m to 7 m | **38542** | - |
| From 7 m to 8 m | **38543** | - |

# AUTOMATIC COVERS: SUBMERGED MODELS

## Submerged models: Accessories



### KINK-PROOF SUPPORT FOR EMBEDDED BEAM

| DIMENSION of pit cover in mm | Code |
|---|---|
| 615 ≤ Dim. ≤ 1015 | **61678** |
| 1016 ≤ Dim. ≤ 1460 | **61682** |

Supports must be used if the inner width of the pool shell is > 4 m.

Kink-proof bracket needed for tie beams over 5.5 m. Two kink-proof brackets needed for tie beams between 5.5 m and 7 m. For more information on kink-proof brackets, please enquire.

| NO. OF BRACKETS FOR A 100 X 70 TIE BEAM | | |
|---|---|---|
| **Pool shell width** | **No. of tie beams needed** | **No. of kink-proof brackets needed** |
| long. ≤ 3.03 m | 1 tie beam | 0 |
| 3.03 < long. ≤ 5.03 m | | 1 |
| 5.03 < long. ≤ 8.03 m | 2 x 4m tie beams | 3 |
| 8.03 < long. ≤ 9.03 m | 1 x 4m tie beam + 1 x 5m tie beam | |
| 9.03 < long. ≤ 10.03 m | 2 x 5m tie beams | |
| 10.03 < long. ≤ 11.03 m | 3 x 4m tie beams | 5 |

| NO. OF BRACKETS FOR A 100 X 110 TIE BEAM | | |
|---|---|---|
| **Pool shell width** | **No. of tie beams needed** | **No. of kink-proof brackets needed** |
| long. ≤ 5.5 m | 1 tie beam | 0 |
| 5.5 < long. ≤ 7.03 m | | 1 |
| 7.03 < long. ≤ 8.03 m | | 2 |
| 8.03 < long. ≤ 9.03 m | 1 x 4m tie beam + 1 x 5m tie beam | 3 |
| 9.03 < long. ≤ 10.03 m | 2 x 5m tie beams | |
| 10.03 < long. ≤ 11.03 m | 1 x 5m tie beam + 1 x 6m tie beam | |

# AUTOMATIC COVERS: SUBMERGED MODELS

## Submerged models: Accessories



Tropical wood box cover



White aluminium compartment cover

Brackets for fastening to wall

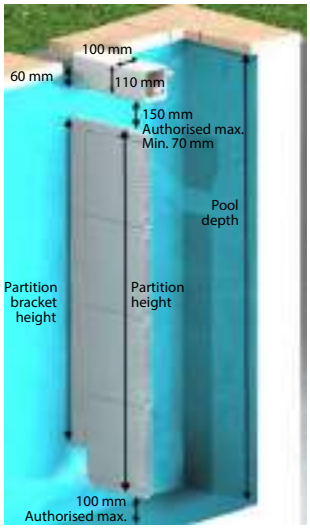


Brackets for fastening to beam brackets

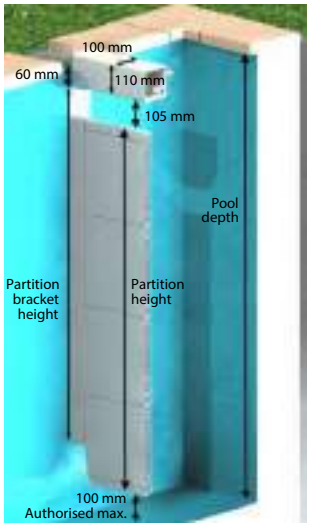


### THE PIT COVER

The pit cover protects the automatic cover operating unit and conveys an aesthetic improvement to the surroundings. It is available in wood, or in white aluminium.

For pools with a partition wall the cover will be 950 mm wide, while for pools with a PVC partition the 700 mm lid will be used.

Thickness of the wooden pit cover: 25 mm.
Thickness of the aluminium pit cover: 28 mm.

| In-ground box cover | Code |
|---|---|
| Made of tropical wood (1.00 x 0.70 m) | **31152** |
| Made of tropical wood (1.00 x 0.95 m) | **31153** |
| Tropical wood made to order ($m^2$) | **31154** |
| White aluminium 1.00 x 0.70 m | **33679** |
| White aluminium 1.00 x 0.95 m | **33680** |
| White aluminium made to measure, $m^2$ | **33681** |
| Sand aluminium 1.00 x 0.70 m | **38512** |
| Sand aluminium 1.00 x 0.950 m | **38513** |
| Sand aluminium made to measure, $m^2$ | **38514** |

### PVC PARTITION

The partition can be made of concrete or PVC. It is designed to improve safety by preventing bathers from coming into contact with the roller shaft. It also prevents the pool-floor cleaning hose from being rolled up into the slats.

The partition is made up of 250 mm high PVC panels, internally reinforced with stainless steel. It is fastened with two white coated stainless steel U clamps, which are fastened to the tie beam support bracket.
Will be fastened to vertical walls.

For pools of more than 6 m width ask your AstralPool branch.

| Partitions | Code |
|---|---|
| White partition 900 mm x 4 m | **31158** |
| White partition 900 mm x 5 m | **31159** |
| White partition 900 mm x 6 m | **31160** |
| White partition 1200 mm x 4 m | **31161** |
| White partition 1200 mm x 5 m | **31162** |
| White partition 1200 mm x 6 m | **31163** |
| White partition 1500 mm x 4 m | **33077** |
| White partition 1500 mm x 5 m | **33078** |
| White partition 1500 mm x 6 m | **38523** |
| H 900 mm white stainless steel U-shaped brackets to fasten to wall | **31164** |
| H 1200 mm white stainless steel U-shaped brackets to fasten to wall | **31165** |
| H 1500 mm white stainless steel U-shaped brackets to fasten to wall | **33084** |
| H 900 mm on tie-beam bracket white stainless steel U-shaped brackets to fasten to wall | **33083** |
| S.S. U clamps colour White H 1200 mm on beam bracket | **38549** |
| S.S. U clamps colour White H 1500 mm on beam bracket | **38550** |

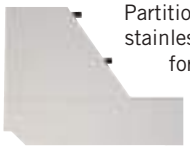

Partition panel with stainless steel reinforcement



U-bracket for fastening to the beam supports



U-bracket for fastening to wall

## AUTOMATIC COVERS: PVC SLATS



WHITE



SAND



LIGHT



MEDIUM GREY

### PVC slats

The AstralPool automatic cover uses hollow extrusion PVC watertight slats. The end-caps welded at both ends ensure the tightness of the slats and the 20mm wide cap flaps can assure the total length of the slat. Flaps can also be 10 or 30 mm, altering the total width of the pool cover.

The slats measure 71.4 mm long and are 17 mm thick, so that they are able to float. To prevent stains, particularly organic ones, the slats are stabilized with calcium and zinc.

To ensure a cover blends in with its surroundings, a number of slat models are available: white, sand, blue and grey.

| Length of pool | Bobbin for a Ø 146 mm aluminium shaft (used for pools up to 6 m in width) |
|---|---|
| 1 m | 220 mm |
| 2 m | 290 mm |
| 3 m | 320 mm |
| 4 m | 360 mm |
| 5 m | 390 mm |
| 6 m | 430 mm |
| 7 m | 460 mm |
| 8 m | 470 mm |
| 9 m | 490 mm |
| 10 m | 530 mm |
| 11 m | 540 mm |
| 12 m | 560 mm |

| | Ref. | Code |
|---|---|---|
| Bracket cut | 060413 | **31180** |
| In shape cut | 060814 | **38735** |

| Pool width (m) | White | | Sand | | Grey | | MEDIUM GREY | |
|---|---|---|---|---|---|---|---|---|
| | Ref. | Code | Ref. | Code | Ref. | Code | Ref. | Code |
| width ≤ 3.53 | 060540 | **34755** | 060546 | **34761** | 060645 | **40998** | 061857 | **061857** |
| 3.53 < width ≤ 4.03 | 060400 | **31168** | 060406 | **31169** | 060647 | **41000** | 061858 | **061858** |
| 4.00 < width ≤ 4.50 | 060541 | **34756** | 060547 | **34762** | 060648 | **41001** | 061859 | **061859** |
| 4.53 < width ≤ 5.03 | 060402 | **31172** | 060407 | **31173** | 060649 | **40761** | 061860I | **061860I** |
| 5.03 < width ≤ 5.53 | 060542 | **34757** | 060548 | **34763** | 060650 | **41002** | 061861I | **061861I** |
| 5.53 < width ≤ 6.03 | 060404 | **31176** | 060408 | **31177** | 060651 | **41003** | 061862 | **061862** |
| 6.03 < width ≤ 7.03 | 060405 | **31900** | 060409 | **31901** | 060652 | **40762** | 061863 | **061863** |
| 7.03 < width ≤ 8.03 | 060399 | **31905** | 060418 | **31906** | 060653 | **41004** | 061864 | **061864** |
| 8.03 < width ≤ 9.03 | 060582 | **35132** | 060586 | **35134** | 061262 | **54588** | 061865 | **061865** |
| 9.03 < width ≤ 10.03 | 060583 | **35133** | 060587 | **35135** | 061406 | **54589** | 061866 | **061866** |
| 10.03 < width ≤ 11.03 | 060398 | **33112ANT** | 060588 | **35136** | 061407 | **54590** | 061867 | **061867** |

Please enquire for larger widths.

### PVC slat accessories





| Caps for grey polycarbonate slats | Code |
|---|---|
| Right plug TRANSPARENT | **070243** |
| Left plug TRANSPARENT | **070242** |
| Right plug SOLAR GREY | **907557** |
| Left plug SOLAR GREY | **907556** |

# AUTOMATIC COVERS: STEP SLATS



## Step slats

In order to adapt to any swimming pool shape, three different standard geometric shapes are available, thus ensuring a perfect fit to the outline of a pool and maximum safety.

The shapes available are: Roman steps, Straight steps and Trapezoidal steps.

## METHOD FOR CALCULATING STEPS SLATS

### ROMAN STEPS

**Location:**
It must be located on the side opposite to the cover shaft.

**Step price:**
Roman step pricelist.

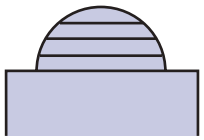

### ISOSCELES TRAPEZOIDAL STEPS

**Location:**
Located in front of the cover.

**Step price:**
Trapezoidal step pricelist.

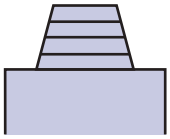

### STRAIGHT STEPS

**Location:**
a) Located in front of the cover shaft.

**Step price:**
Straight step price.

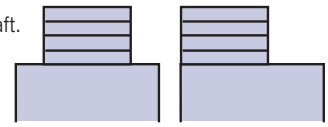

**Location:**
b) Located next to the cover.

**Step price:**
Slat pricelist per metre length
D x (C + 1 m).

• The length of the shaft (D) includes the width of the pool (A) + the depth of the steps (E).

NOTE FOR SIDE STEPS:
Total slat cost calculation:
Step price + slat price (A x B)

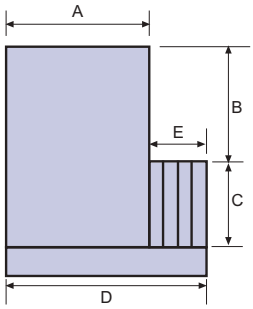


### RECTANGULAR TRAPEZOIDAL STEPS

**Location:**
a) Located in front of the cover shaft.

**Step price:**
Trapezoidal step pricelist.

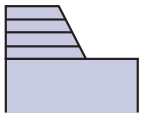

**Location:**
b) Located next to the cover.

**Step price:**
Slat price per metre length
D x (C + 1 m) + slat cutting surcharge for custom cutting per metre length.

• Length of D axis includes A length of pool + E depth of step

NOTE FOR SIDE STEPS:
Total slat cost calculation:
Step price + slat price (A x B)

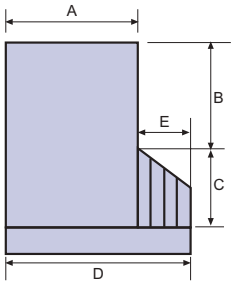


| Description | white | Sand | Blue | Grey | Medium Grey |
|---|---|---|---|---|---|
| **Roman step bracket cut** | | | | | |
| **Ø 3 m** | **31182** | **31183** | **31184** | **41043** | **061868** |
| **Ø 4 m** | **31186** | **31187** | **31188** | **41044** | **061869** |
| **Roman step in-shape cut** | | | | | |
| **Ø 3 m** | **37094** | **37188** | **37190** | **41045** | **061870** |
| **Ø 4 m** | **37095** | **37189** | **37191** | **41046** | **061871** |
| **Straight steps** | | | | | |
| **2 x 1,5 m** | **31190** | **31191** | **31192** | **41047** | **061872** |
| **2,5 x 2 m** | **31194** | **31195** | **31196** | **41048** | **061873** |
| **Trapezoidal step bracket cut** | | | | | |
| **base 3 m** | **31198** | **31199** | **31200** | **41049** | **061874** |
| **base 4 m** | **31202** | | **31204** | **41050** | **061875** |
| **Shape-cut Trapezoidal ladder** | | | | | |
| **base 3 m** | **37098** | **37196** | **37198** | **41051** | **061876** |
| **base 4 m** | **37099** | **37197** | **37199** | **41052** | **061877** |

Larger steps: use surplus cut-outs in shape 38735 or bracket 31180 per metre length.

# AUTOMATIC COVERS: POLYCARBONATE SLATS AND STEPS



SOLAR BLUE



Transparent



SOLAR TRANSPARENT



SOLAR GREY

Norme NF 90-308

## Polycarbonate slats

Main advantages of polycarbonate slats:

- Strong impact resistance: Polycarbonate slats are approximately 8 times more resistant than PVC slats.
- Heat resistance: the deformation point is 140º compared to 80º for PVC.
- Very good ageing resistance thanks to UV protection layer on the top of the slat.
- Polycarbonate's lower density means the slats float better.
- Compliant with standard NF P 90-308.
- 3-year warranty
- Slat dimensions: 71 x 17 mm.

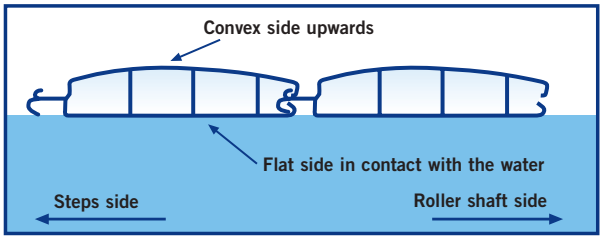




| Pool length (m) | SOLAR BLUE | TRANSPARENT | SOLAR TRANSPARENT | SOLAR GREY |
|---|---|---|---|---|
| long < 4.03 m | 061547 | 070066 | 070420 | 070266 |
| 4.03 m < long < 5.03 m | 061548 | 070067 | 070421 | 070265 |
| 5.03 m < long < 6.03 m | 061549 | 070068 | 070422 | 070267 |
| 6.03 m < long < 7.03 m | 061550 | 070069 | 070423 | 070268 |
| 7.03 m < long < 8.03 m | 061551 | 070070 | 070424 | 070269 |

For bigger widths, please enquire. ml = metre length. Available in other colours, please enquire.

## Polycarbonate steps.

| Stair type and measurements | SOLAR BLUE | TRANSPARENT | SOLAR TRANSPARENT | SOLAR GREY |
|---|---|---|---|---|
| Roman step bracket cut diam < 3 m | 061604 | 070081 | 070425 | 070270 |
| Roman step bracket cut 3 m < diam < 4 m | 061505 | 070082 | 070426 | 070271 |
| Roman step bracket cut max 2 m depth 1.5 m | 061606 | 070085 | 070427 | 070272 |
| Roman step bracket cut max 2.5 m depth 2 m | 061607 | 070086 | 070428 | 070273 |
| Trapezoidal step bracket cut max 3 m | 061608 | 070087 | 070429 | 070274 |
| Trapezoidal step bracket cut max 4 m | 061609 | 070088 | 070430 | 070275 |



## Polycarbonate slat accessories

| Caps for grey polycarbonate slats | Code |
|---|---|
| Right plug TRANSPARENT | 070243 |
| Left plug TRANSPARENT | 070242 |
| Right plug SOLAR BLUE | 070259 |
| Left plug SOLAR BLUE | 070260 |
| Right plug SOLAR GREY | 907557 |
| Left plug SOLAR GREY | 907556 |

# AUTOMATIC COVERS: ACCESSORIES



## Safety systems in AISI-316 stainless steel (glossy)

Thickness: 15.3 mm
- Height: 52.1 mm
- Width: 30 mm

**Aesthetics: In glossy AISI-316 stainless steel + coloured strap**


White


Sand


Grey


Blue

**Easy to install: fastens to wall or on surface at two possible heights**



**Easy to handle**



| Liner accessories | Code |
|---|---|
| S.S. safety system for fastening to wall with white PVC strap | **070317** |
| S.S. safety system for fastening to surface (height of 50 mm) with white PVC strap | **070318** |
| S.S. safety system for fastening to surface (height of 100 mm) with white PVC strap | **070321** |
| S.S. safety system for fastening to wall with sand PVC strap | **070322** |
| S.S. safety system for fastening to surface (height of 50 mm) with sand PVC strap | **070323** |
| S.S. safety system for fastening to surface (height of 100 mm) with sand PVC strap | **070324** |
| S.S. safety system for fastening to wall with grey PVC strap | **070328** |
| S.S. safety system for fastening to surface (height of 50 mm) with grey PVC strap | **070329** |
| S.S. safety system for fastening to surface (height of 100 mm) with grey PVC strap | **070330** |
| S.S. safety system for fastening to wall with blue PVC strap | **070331** |
| S.S. safety system for fastening to surface (height of 50 mm) with blue PVC strap | **070332** |
| S.S. safety system for fastening to surface (height of 100 mm) with blue PVC strap | **070333** |





## Fabric strap tying system

Good value for money.

| Liner accessories | Code |
|---|---|
| Fabric safety system for fastening to white wall | **070316** |
| Fabric safety system for fastening to white wall (height of 50 mm) | **070334** |
| Fabric safety system for fastening to white wall (height of 100 mm) | **070335** |

**Easy to install: fastens to wall or on surface at two possible heights**



# AUTOMATIC COVERS: ACCESSORIES



35131



34754



31944

## ABS safety systems

We have a line of accessories for both using and maintaining automatic covers.

| Liner accessories | Code |
|---|---|
| Lift-prevention bracket in ABS for wall fixing + belts | **34754** |
| ABS bracket + S.S. support to install under the coping stone + belt | **35131** |
| Overflow pool bracket | **31943** |
| Sky cover, above-ground model | **31944** |
| Slat-shaft joint belt | **31238** |
| Flange belt | **34774** |

In compliance with the French standard NF P90-308 on swimming pool covers the following straps will be supplied according to the kind of cover and pool:

| Interior pool width | No. of flanges for above-ground covers | No. of flanges for submerged covers |
|---|---|---|
| Width <= 3 m | 4 | 2 |
| 3 m < width < = 5 m | 6 | 3 |
| 5 m < width < = 7 m | 8 | 4 |
| 7 m < width < = 10 m | 10 | 5 |

# AUTOMATIC COVERS: WIRELESS REMOTE CONTROLS WITH KEY



65931



65932

**The days of performing stunts to open and close your cover are over!**

**In compliance with the French standard NF P90-308 for swimming pool covers the following straps will be supplied according to depending on the kind of cover and the swimming pool:**

## Wireless remote control with key

- Easy to install.
- No power supply required.
- Compatible with all AstralPool automatic covers.

**Characteristics of the control box:**

- Size: 82 x 72 x 74 mm.
- IP67.
- Power supply: One 9 V PP3 battery.
- Autonomy of battery: 1 year.
- Range: 15 metres.

**Characteristics of the receptor:**

- Size: 142.60 x 102.60 x 57 mm.
- IP55.
- Power supply: 12 to 24 VDC or 24 VAC.

**Installation:**

- The control box must be secured in a place from which all of the pool can be seen by the user.
- The receptor should be connected to the switchboard in the case of a submerged cover or directly to the motor in the case of an above-ground cover (the receptor must be place at the foot of the roller).

Warranty: 3 years.

| | Code | Standard Pack | Standard Weight in kg | Standard Volume in $m^3$ |
|---|---|---|---|---|
| Wireless control box | **65931** | - | - | - |
| Receptor for wireless remote control | **65932** | - | - | - |
| Wireless control box + receptor | **65933** | - | - | - |

## AUTOMATIC COVERS: WIRELESS REMOTE CONTROLS WITH KEY



### Wireless remote control with key for submerged covers

Wireless remote control with key and stainless steel front plate Can replace the existing key switch used for submerged automatic covers.

- Wall assembly.
- Easy to install.
- No power supply required.
- Compatible with all AstralPool submerged automatic covers.
- 3-position key switch.
- Stainless steel front plate.
- Metal housing.
- IP54.
- Dimensions: L. 75 x D. 52 x H. 75 mm.
- 3-year warranty

| | Code | Standard Pack | Standard Weight in kg | Standard Volume in $m^3$ |
|---|---|---|---|---|
| Wireless remote control | **907504** | - | - | - |



### Remote control for automatic covers

Remote control that enables the automatic cover to be opened and closed without the need for keys.

- Easy to install.
- Compatible with all of Fluidra's automatic pool covers.

**Remote control features:**

- Dimensions: 80 x 40 x 10 mm.
- Power supply: A 12 V / 23 A battery.
- Autonomy of battery: 1 year.
- Range: 15 metres.

**Characteristics of the receptor:**

- Size: 142.60 x 102.60 x 57 mm.
- IP55.
- Power supply: 12 to 24 V DC or 24 V AC.

**Installation:**

- The receptor must be connected to the distribution board for submerged pool covers or directly to the motor for above-ground covers (with the receptor placed at the foot of cover).

3-year warranty

Not compliant with the French NF P 90-308 safety standard.

| | Code | Standard Pack | Standard Weight in kg | Standard Volume in $m^3$ |
|---|---|---|---|---|
| Full remote control | **070377** | - | - | - |

## AUTOMATIC COVERS: MANUFACTURING SPECIFICATIONS

+ info

PDB

See the manufacturer's data sheets for automatic pool covers in the AstralPool product database, available in the PRODUCTS section at www.astralpool.com.

## AUTOMATIC COVERS: TECHNICAL SPECIFICATIONS

| CABLE SECTION | | | | | |
|---|---|---|---|---|---|
| Power cord for all motor models, depending on distance (D) between motor and control cabinet | | | Limit switch cable (1) | Electrolysis cable (2) | Key switch cable (3) |
| D < 15 m | 15 m ≤ D < 25 m | 25 m ≤ D < 50 m | | | |
| 2 x 4 mm² | 2 x 6 mm² | 2 x 10 mm² | 3 x 1.5 mm² | 3 x 1.5 mm² | 3 x 1.5 mm² |

The cables mentioned above are not supplied with the shutter.
(1) Cable to run from control box to motor (ATTENTION: for motor in cable axis of 4 x 1.5 mm²).
(2) Cable to run from control box to motor.
(3) Cable to run from control box to key switch (in the case of a remote key switch).

| STANDARD HEIGHTS BETWEEN ABOVE-GROUND COVER BRACKETS | |
|---|---|
| Above-ground models | Standard heights between brackets |
| N-CARLIT / CARLIT ECO | Interior pool width + 14 cm |
| CARLIT SOLAR | Interior pool width + 11 cm |
| MOBILE BAY ON RAILS OR WHEELS | Interior pool width + 22 cm |

| BOBBIN Ø in mm (SHAFT + SLATS) | | | |
|---|---|---|---|
| Length of pool | Alu shaft Ø 146 mm | Alu shaft Ø 196 mm | S.S. shaft Ø 300 mm |
| 1 m | 220 | 260 | 335 |
| 2 m | 290 | 320 | 370 |
| 3 m | 320 | 350 | 405 |
| 4 m | 360 | 390 | 440 |
| 5 m | 390 | 420 | 472 |
| 6 m | 430 | 450 | 472 |
| 7 m | 460 | 470 | 510 |
| 8 m | 470 | 490 | 540 |
| 9 m | 490 | 520 | 540 |
| 10 m | 530 | 530 | 575 |
| 11 m | 540 | 560 | 575 |
| 12 m | 560 | 570 | 610 |
| 13 m | 590 | 590 | 610 |
| 14 m | 600 | 610 | 645 |
| 15 m | 640 | 630 | 645 |
| 16 m | 660 | 640 | 680 |
| 17 m | 680 | 660 | 680 |
| 18 m | 700 | 680 | 715 |
| 19 m | 720 | 700 | 715 |
| 20 m | 730 | 720 | 750 |
| 23 m | - | - | 800 |
| 25 m | - | - | 850 |





# PVC FITTINGS FOR POOLS


321 • Fitt B-Active and Fitt Idroflex
322 • Pressure fluid handling PVC PN-16 fittings
324 • Pressure fluid handling PVC accessories
326 • Filter ring manifolds for ¾" laterals
327 • Filter ring manifolds for 1" laterals
328 • Diffuser filter
328 • Collectors for valve manifolds




ASTRALPOOL

# definitely ingenious

**ASSURED TRACEABILITY**
Sub-layer marking, indelible.

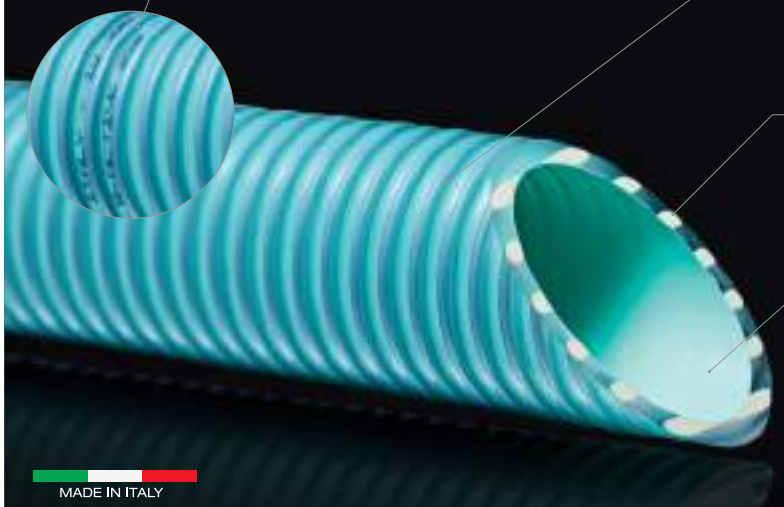

**ASSURED RESISTANCE**
The lining of the rigid spiral (Spiral Protection Barrier) acts as a barrier that prevents premature embrittlement due to environmental stress cracking (ESC).

SPIRAL PROTECTION BARRIER
Patented

**ASSURED FLEXIBILITY**
The spiral with D-Shape cross-section is extremely resistant to crushing (up to 34 kN/m2). Combined with the use of premium materials, it guarantees high flexibility and a smaller radius of curvature (up to 125 mm).

D-SHAPE
Patent pending

**ASSURED PROTECTION**
La pellicola CDS (Chlorine Defence System) The CDS (Chlorine Defence System) film offers extensive protection even against high-chlorine water and acidic environments, guaranteeing lasting performance.

CHLORINE DEFENCE SYSTEM
Patented

MADE IN ITALY

10 YR GUARANTEE*

10 YR INSURANCE* COVERAGE



* FITT S.p.A. offers a 10-year warranty and a special 10-year insurance coverage for all damages caused to third parties, and includes any costs for excavations, dismantling and assembling of the hose and backfilling.
For further details visit the website bactive.fitt.it.

## fitt b-active

**RESISTANT. GUARANTEED. SAFE.**

FITT B-Active is the hose for swimming pool systems that offers "dual" protection with the 10-year insurance coverage and warranty, thanks to its patented technologies and indelible traceability.
The product is designed and made entirely in Italy.

**BACTIVE.FITT.IT**

fitt
TECHNOLOGY FLOW

INDUSTRIAL DIVISION

# FITT B-ACTIVE AND FITT IDROFLEX

## Fitt B-active

**TECHNICAL FEATURES**

| Product | external Ø (mm) | Pressure (bar) | Pressure distribution (bar) | Drainage (m H2O) | Bend radius (mm) | Ring stiffness (kN/m²) |
|---|---|---|---|---|---|---|
| FITT B-ACTIVE Ø50 | 50 | 6 | 18 | 9 | 125 | 34 |
| FITT B-ACTIVE Ø63 | 63 | 4 | 12 | 9 | 165 | 22 |

**Logistical features**

| Code | Product | external Ø (mm) | Roll length (m) | Weight (kg/roll) | Quantity (roll/pal) | Pallet dimensions (mm) |
|---|---|---|---|---|---|---|
| **69860** | FITT B-ACTIVE Ø50 25m | 50 | 25 | 19 | 12 | 800x1600xH1240 |
| **69861** | FITT B-ACTIVE Ø50 50m | 50 | 50 | 37,5 | 8 | 800x1600xH1360 |
| **69862** | FITT B-ACTIVE Ø63 25m | 63 | 25 | 24,5 | 6 | 1200x1000xH1280 |

Mechanical and chemical performance tests were run both internally and with the collaboration of Padua University/DTG Laboratory. Test certified by TÜV (test record no. MEC16173.00).

Complies with European Directive (EU) 10/2011 for A-B-C simulants
Operating temperature -10°C/+60°C.
Formula with phthalate content ≤ 0.1 %.

**NB:** Tolerances comply with standard UNI EN ISO 1307: 2008. Thermoplastic products subject to deformation due to outdoor ambient temperature and retraction; longitude tolerance is ± 5%.

Conforms to the EN ISO 3994:2014 standar
TÜV approval no. B 17 04 55285 007

## Fitt idroflex

| Code | Product | External Ø (mm) | Operating pressure (bar) | Drainage (m H2O) | Roll length (m) | Weight (kg/roll) | Quantity (roll/pal) | Pallet dimensions (mm) |
|---|---|---|---|---|---|---|---|---|
| **69852** | FITT IDROFLEX Ø25 50m | 25 | 7 | 7 | 50 | 12,5 | 12 | 800x1200xH1200 |
| **69853** | FITT IDROFLEX Ø32 50m | 32 | 7 | 7 | 50 | 21,0 | 16 | 1200x1200xH1200 |
| **69855** | FITT IDROFLEX Ø40 25m | 40 | 5 | 7 | 25 | 15,5 | 16 | 1200x1200xH1200 |
| **69854** | FITT IDROFLEX Ø40 50m | 40 | 5 | 7 | 50 | 30,5 | 5 | 800x1200xH1200 |
| **69857** | FITT IDROFLEX Ø50 25m | 50 | 5 | 7 | 25 | 16 | 12 | 800x1600xH1240 |
| **69856** | FITT IDROFLEX Ø50 50m | 50 | 5 | 7 | 25 | 31,5 | 8 | 800x1600xH1360 |
| **69858** | FITT IDROFLEX Ø63 25m | 63 | 4 | 7 | 25 | 23 | 6 | 1200x1000xH1280 |
| **69859** | FITT IDROFLEX Ø75 25m | 75 | 2,5 | 6 | 25 | 37 | 3 | 1200x1200xH1200 |
| **69963-032 L25** | FITT IDROFLEX Ø75 25m | | | | | | | |
| **69966-020 L25** | FITT IDROFLEX Ø75 25m | | | | | | | |

## PRESSURE FLUID HANDLING PVC PN-16 FITTINGS



### PVC 90° elbow solvent socket

| | Code | Standard Pack | Standard Weight in kg | Standard Volume in $m^3$ |
|---|---|---|---|---|
| Ø 50 mm | **32588** | 70 | 8.67 | 0.0408 |
| Ø 63 mm | **32589** | 36 | 7.86 | 0.0408 |



### PVC 45° elbow solvent socket

| | Code | Standard Pack | Standard Weight in kg | Standard Volume in $m^3$ |
|---|---|---|---|---|
| Ø 50 mm | **32590** | 40 | 3.72 | 0.0204 |
| Ø 63 mm | **32591** | 20 | 3.56 | 0.0204 |



### PVC-Tee 90° solvent socket

| | Code | Standard Pack | Standard Weight in kg | Standard Volume in $m^3$ |
|---|---|---|---|---|
| Ø 50 mm | **32592** | 48 | 8.95 | 0.0408 |
| Ø 63 mm | **32593** | 30 | 9.73 | 0.0408 |



### PVC union solvent socket

| | Code | Standard Pack | Standard Weight in kg | Standard Volume in $m^3$ |
|---|---|---|---|---|
| Ø 50 mm | **32594** | 60 | 4.48 | 0.0204 |
| Ø 63 mm | **32595** | 35 | 3.98 | 0.0204 |

## PRESSURE FLUID HANDLING PVC PN-16 FITTINGS



### PVC reducing bush solvent socket

| | Code | Standard Pack | Standard Weight in kg | Standard Volume in $m^3$ |
|---|---|---|---|---|
| Ø 63 mm x 50 mm | **32596** | 48 | 3.08 | 0.0102 |



### PVC adaptor nipple: solvent socket & BSP male thread

| | Code | Standard Pack | Standard Weight in kg | Standard Volume in $m^3$ |
|---|---|---|---|---|
| Ø 50 mm x 40 mm x 1½" | **32597** | 24 | 2.48 | 0.0102 |
| Ø 63 mm x 50 mm x 2" | **32598** | 38 | 5.84 | 0.0204 |



### PVC adaptor bush: female solvent socket & BSP male thread

| | Code | Standard Pack | Standard Weight in kg | Standard Volume in $m^3$ |
|---|---|---|---|---|
| Ø 50 mm x 1½" | **32599** | 48 | 3.27 | 0.0102 |
| Ø 63 mm x 2" | **32600** | 50 | 5.60 | 0.0204 |



### PVC 3 piece union solvent socket

| | Code | Standard Pack | Standard Weight in kg | Standard Volume in $m^3$ |
|---|---|---|---|---|
| Ø 50 mm | **32601** | 30 | 5.80 | 0.0204 |
| Ø 63 mm | **32602** | 12 | 4.44 | 0.0204 |



### PVC 3 piece union: female solvent socket & BSP male thread

| | Code | Standard Pack | Standard Weight in kg | Standard Volume in $m^3$ |
|---|---|---|---|---|
| Ø 50 mm x 1½" | **32603** | 30 | 6.70 | 0.0204 |
| Ø 63 mm x 2" | **32604** | 12 | 5.24 | 0.0204 |

# PRESSURE FLUID HANDLING PVC ACCESSORIES



## PVC ball valve PN-12

HDPE (polythene) ball seat. EPDM O-rings. "Antiblock" system.

| | Code | Standard Pack | Standard Weight in kg | Standard Volume in $m^3$ |
|---|---|---|---|---|
| Ø 50 mm | **41941** | 10 | 7.61 | 0.0204 |
| Ø 63 mm | **41942** | 10 | 11.80 | 0.0408 |



## PVC ball valve (STD PN16)

HDPE (polythene) ball seat. EPDM O-rings. "Antiblock" system.

| | Code | Standard Pack | Standard Weight in kg | Standard Volume in $m^3$ |
|---|---|---|---|---|
| Ø 50 mm | **36505** | 10 | 7.40 | 0.0204 |
| Ø 63 mm | **36506** | 10 | 12.70 | 0.0408 |



## PVC spring check valve

HDPE (polythene) ball seat. EPDM O-rings. "Antiblock" system.

| | Code | Standard Pack | Standard Weight in kg | Standard Volume in $m^3$ |
|---|---|---|---|---|
| Ø 50 mm | **09015** | 12 | 7.80 | 0.0204 |
| Ø 63 mm | **09016** | 10 | 11.70 | 0.0408 |



**Manual valves**

## 3-way rotary disc valve

3-way rotary disc valve in PVC-U for rotary flap to shut off one port. Can be used in circuits where the working pressure is not above 6 bar (90 psi); includes a lever that shows the port shut off.

Sizes: Ø 50-63 mm and Ø 63-75 mm. Available in manual (lever) or automatic (electric actuator) mode. Designed for use in pools and spas, they have a distribution system for facilitating optimum flow rate adjustment at each outlet that is extremely user-friendly. The manual valve can have 2 open ports and 1 shut off, 3 open valves or a partial adjustable opening, whilst the electric actuator can be turned from 90º to 180º and has a 230 24 V AC connection.



**Automatic valves**

| | Code | Standard Pack | Standard Weight in kg | Standard Volume in $m^3$ |
|---|---|---|---|---|
| **3-way rotary disc valve solvent socket** | | | | |
| Manual Ø 63-75 mm | **41862** | 4 | - | 0.041 |
| Manual Ø 50-63 mm | **15765** | 8 | - | 0.041 |
| Automatic Ø 50-63 mm. 220 VAC (180º) | **41863** | 1 | - | 0.041 |
| Automatic Ø 63-75 mm. 220 VAC (180º) | **59959** | 1 | - | 0.041 |
| Automatic Ø 50-63 mm. 24 VAC (180º) | **45866** | 1 | - | 0.041 |
| Automatic Ø 63-75 mm. 24 VAC (180º) | **59960** | 1 | - | 0.041 |
| Automatic Ø 63-75 mm. 220 VAC (90º) | **41864** | 1 | - | 0.041 |
| Automatic Ø 63-75 mm. 24 VAC (90º) | **43730** | 1 | - | 0.041 |

# PRESSURE FLUID HANDLING PVC ACCESSORIES



## PVC pipe PN-10

| | Code | Standard Pack | Standard Weight in kg | Standard Volume in $m^3$ |
|---|---|---|---|---|
| Ø 40 mm | **02708** | 5 m | - | - |
| Ø 50 mm | **02709** | 5 m | 45.0 | 1.14 |
| Ø 63 mm | **02710** | 6 m | 72.0 | 1.40 |
| Ø 75 mm | **02711** | 6 m | - | - |
| Ø 90 mm | **02712** | 6 m | - | - |
| Ø 110 mm | **02713** | 6 m | - | - |
| Ø 125 mm | **02714** | 6 m | - | - |
| Ø 140 mm | **02715** | 6 m | - | - |
| Ø 160 mm | **02716** | 6 m | - | - |
| Ø 180 mm | **02717** | 6 m | - | - |
| Ø 200 mm | **02718** | 6 m | - | - |
| Ø 250 mm | **02719** | 6 m | - | - |
| Ø 315 mm | **02720** | 6 m | - | - |



## Semi-rigid hose

Made of PVC to glue to pressure fittings using PVC adhesive grey colour.

| | Code | Standard Pack | Standard Weight in kg | Standard Volume in $m^3$ |
|---|---|---|---|---|
| Ø 16 mm | **34587** | 25 m | 3.2 | 0.030 |
| Ø 16 mm | **34586** | 50 m | 6.2 | 0.040 |
| Ø 20 mm | **30754** | 25 m | 4.0 | 0.040 |
| Ø 20 mm | **28570** | 50 m | 9.1 | 0.060 |
| Ø 25 mm | **30755** | 25 m | 6.0 | 0.050 |
| Ø 25 mm | **28571** | 50 m | 11.0 | 0.042 |
| Ø 32 mm | **30756** | 25 m | 9.6 | 0.070 |
| Ø 32 mm | **28572** | 50 m | 16.7 | 0.065 |
| Ø 40 mm | **30757** | 25 m | 12.3 | 0.110 |
| Ø 40 mm | **28573** | 50 m | 23.0 | 0.109 |
| Ø 50 mm | **30758** | 25 m | 18.4 | 0.150 |
| Ø 50 mm | **28574** | 50 m | 37.0 | 0.178 |
| Ø 63 mm | **28575** | 25 m | 49.5 | 1.140 |
| Ø 75 mm | **34588** | 25 m | 33.3 | 0.300 |




## PVC Solvent

| | Code | Standard Pack | Standard Weight in kg | Standard Volume in $m^3$ |
|---|---|---|---|---|
| 0,5 l | **02432** | 15 | 8.1 | 0.026 |
| 1 l | **02431** | 12 | 11.0 | 0.036 |



## PVC glue

| | Code | Standard Pack | Standard Weight in kg | Standard Volume in $m^3$ |
|---|---|---|---|---|
| 0,25 l | **02429** | 30 | 10.0 | 0.024 |
| 0,50 l | **02427** | 15 | 8.0 | 0.026 |
| 1 l | **02426** | 12 | 13.0 | 0.036 |
| 0.50 l with paint brush | **09043** | - | - | - |
| 1 l with paint brush | **09044** | - | - | - |

## PRESSURE FLUID HANDLING PVC ACCESSORIES



### PVC Cleaner

Liquid cleaner specially adequate for cleaning and degreasing pipes, coupling sockets and other PVC rigid fittings before gluing them together, and for removing excess glue.

| | Code | Standard Pack | Standard Weight in kg | Standard Volume in $m^3$ |
|---|---|---|---|---|
| Cleaner 500 ml | **57685** | - | - | - |
| Cleaner 1000 ml | **57687** | - | - | - |



### Blue Adhesive, extra quick drying for flexible and rigid PVC pipes

For large diameter pressure pipes. Slow setting time, allowing correct positioning of the fittings and perfect cementation.
Supplied with brush.

| | Code | Standard Pack | Standard Weight in kg | Standard Volume in $m^3$ |
|---|---|---|---|---|
| 250 ml | **56217** | 36 | 11.18 | 0.02 |
| 500 ml | **56218** | 24 | 13.50 | 0.02 |
| 1000 ml | **56221** | 12 | 12.90 | 0.02 |



### Blue Adhesive, extra quick drying for flexible and rigid PVC pipes

Special for pools. For use in pool installations. Its high Gel composition and covering capacity gives perfect cementation. Supplied with brush.

| | Code | Standard Pack | Standard Weight in kg | Standard Volume in $m^3$ |
|---|---|---|---|---|
| 250 ml | **57680** | 36 | 11.20 | 0.02 |
| 500 ml | **57682** | 24 | 13.50 | 0.02 |
| 1000 ml | **57683** | 12 | 12.90 | 0.02 |

## FILTER RING MANIFOLDS FOR ¾" LATERALS



### 8 lateral ring manifold

Made of PVC, inner Ø 50 mm and outer Ø 63 mm. For ¾" collector arms.

| Code | Standard Pack | Standard Weight in kg | Standard Volume in $m^3$ |
|---|---|---|---|
| **00624** | 12 | 4.0 | 0.017 |

### 12 lateral ring manifold

Made of PVC, inner Ø 63 mm and outer Ø 75 mm.

| Code | Standard Pack | Standard Weight in kg | Standard Volume in $m^3$ |
|---|---|---|---|
| **00625** | 6 | 3.0 | 0.310 |

## FILTER RING MANIFOLDS FOR 1" LATERALS



### ¾" Laterals

0.3 mm slots.

| | Code | Standard Pack | Standard Weight in kg | Standard Volume in m³ |
|---|---|---|---|---|
| Length 225 mm | **00626** | 50 | 2.0 | 0.017 |
| Length 160 mm | **00627** | 50 | 2.0 | 0.017 |
| Length 110 mm | **00628** | 50 | 2.0 | 0.008 |
| Length 100 mm (extensions) | **00629** | 50 | 2.0 | 0.008 |



### Bush coupling

For laterals. In PVC.

| | Code | Standard Pack | Standard Weight in kg | Standard Volume in m³ |
|---|---|---|---|---|
| Inside threading ¾" | **00630** | 50 | 2.0 | 0.003 |

## FILTER RING MANIFOLDS FOR 1" LATERALS



### 8 lateral ring manifold

Made of PVC, inner Ø 50 mm and outer Ø 63 mm.

| Code | Standard Pack | Standard Weight in kg | Standard Volume in m³ |
|---|---|---|---|
| **06433** | 12 | 4.0 | 0.017 |

### 12 lateral ring manifold

Made of PVC, inner Ø 63 mm and outer Ø 75 mm.

| Code | Standard Pack | Standard Weight in kg | Standard Volume in m³ |
|---|---|---|---|
| **06434** | 6 | 3.0 | 0.310 |



### 1" laterals

0.3 mm slots.

| | Code | Standard Pack | Standard Weight in kg | Standard Volume in m³ |
|---|---|---|---|---|
| Length 225 mm | **06435** | 50 | 2.0 | 0.017 |
| Length 160 mm | **06436** | 50 | 2.0 | 0.017 |
| Length 110 mm | **06437** | 50 | 2.0 | 0.008 |
| Length 100 mm (extensions) | **06438** | 50 | 2.0 | 0.008 |



### Bush coupling

For laterals. In PVC.

| | Code | Standard Pack | Standard Weight in kg | Standard Volume in m³ |
|---|---|---|---|---|
| Inner threading 1" | **06439** | - | - | - |

## DIFFUSER FILTER



### For Ø 50 mm Pipe

| Code | Standard Pack | Standard Weight in kg | Standard Volume in $m^3$ |
|---|---|---|---|
| **00645** | 6 | 1.0 | 0.009 |

### For Ø 63 mm Pipe

| Code | Standard Pack | Standard Weight in kg | Standard Volume in $m^3$ |
|---|---|---|---|
| **00646** | 6 | 2.0 | 0.023 |

## COLLECTORS FOR VALVE MANIFOLDS



### Collector pipe for valve manifold

Made of PVC. Inlet connections, inner Ø 50 mm and 63 mm. Outlet connections Ø 50 and 63 mm.

| | Code | Standard Pack | Standard Weight in kg | Standard Volume in $m^3$ |
|---|---|---|---|---|
| Connections Ø 50 mm | **31877** | 1 | - | - |
| Connections Ø 63 mm | **34407** | 1 | - | - |



# POOLS

330 • Laghetto above ground pools
358 • Inoxpool

# LAGHETTO ABOVE GROUND POOLS

## Playa model MINIPOOL version

New

PLAYA

**Sunbed (optional):**
Tempotest® fabric finish available in several colors.

natural - N | water - W | brown - B | grey - G

**Filtration system composed of:**
One wall skimmer complete with pre-filter, cartridge filter, 120 W, 12 V, class 2, synchronous pump with permanent magnet, max. flow 5500 l/h, complete with transformer. Included: suction plate and brush for bottom cleaning.

**Internal structure**

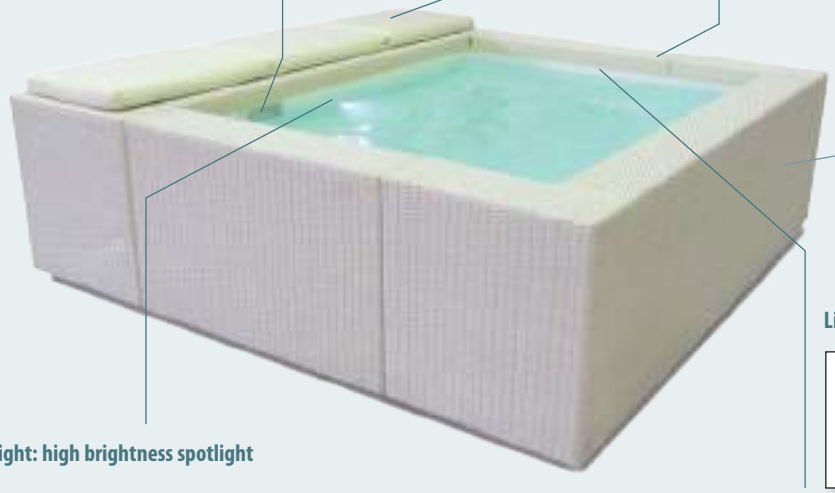

**Exterior panels:**
Handwoven fiber.

Laghetto white - BI
coffee - CF
grey - GR

**Liner:**
white - BI

**LED spotlight: high brightness spotlight**

| Description | Total dimensions (W x L x H) cm | Water dimensions (W x L x H) cm | Water volume Litres | Packaging dimensions | Total gross weight Kg | N. pallets | Color panel model | Laghetto reference | Code |
|---|---|---|---|---|---|---|---|---|---|
| **MiniPool Version.** **Playa 1 - 220 x 220.** SINGLE CASE STRUCTURE - WHITE POOL LINER - 12 V FILTRATION SYSTEM WITH WALL SKIMMER - LED SPOT - WICKER PANELS | 220x220x70 | 180x140x55 | 1200 | 80x230x h150 | 157 | 1 | PLAYA1 COFFEE | KITDVPLA1BICF1G | **67338** |
| | | | | | | | PLAYA1 WHITE | KITDVPLA1BIBI1G | **67339** |
| | | | | | | | PLAYA1 GREY | KITDVPLA1BIGR1G | **69349** |
| **MiniPool Version.** **Playa 2 - 320 x 220..** SINGLE CASE STRUCTURE - WHITE POOL LINER - 12 V FILTRATION SYSTEM WITH WALL SKIMMER - LED SPOT - WICKER PANELS | 220x320x70 | 180x240x55 | 2000 | 80x230x h170 | 183 | 1 | PLAYA2 COFFEE | KITDVPLA2BICF1G | **67340** |
| | | | | | | | PLAYA2 WHITE | KITDVPLA2BIBI1G | **67341** |
| | | | | | | | PLAYA2 GREY | KITDVPLA2BIGR1G | **69351** |
| **MiniPool Version.** **Playa 3 - 420 x 220.** SINGLE CASE STRUCTURE - WHITE POOL LINER - 12 V FILTRATION SYSTEM WITH WALL SKIMMER - LED SPOT - WICKER PANELS | 220x420x70 | 180x340x55 | 3000 | 80x230x h170 | 198 | 1 | PLAYA3 COFFEE | KITDVPLA3BICF1G | **69355** |
| | | | | | | | PLAYA3 WHITE | KITDVPLA3BIBI1G | **69356** |
| | | | | | | | PLAYA3 GREY | KITDVPLA3BIGR1G | **69358** |

**POOL WARRANTY: 5 YEARS. ACCESSORIES WARRANTY: 2 YEARS.**

# LAGHETTO ABOVE GROUND POOLS

## Playa model BUBBLES version

PROFESSIONAL ADVICE RECOMMENDED

New

PLAYA

**Sunbed (optional):**

Tempotest® fabric finish available in several colors.

natural - N

water - W

brown - B

grey - G

**Laghetto filtration system composed of:**

One wall skimmer complete with pre-filter and cartridge filter. Included: suction plate and brush for bottom cleaning.
ABS self-extinguishing technical box including: 130 W, 220 V, permanent magnets circulation pump, max flow 6700 l/h, max prevalence 3,65 m.
220 V, 700 W absorption, IPX5 class II, max flow 70 mc/h, max pressure 190 mbar, air blower.
Class II, 220/12 V 10 VA Led transformer.
Control unit complete with keyboard and display (IPX5 protected) for filtration cycles, blower and Led control.

**Exterior panels:**

Handwoven fiber.

Laghetto white - BI

coffee - CF

grey - GR

Internal structure



**Liner:**

white - BI

**LED spotlight: high brightness spotlight**

| Description | Total dimensions (W x L x H) cm | Water dimensions (W x L x H) cm | Water volume Litres | Packaging dimensions | Total gross weight Kg | N. pallets | Color panel model | Laghetto reference | Code |
|---|---|---|---|---|---|---|---|---|---|
| **Bubbles Version.** **Playa 1 - 220 x 220.** SINGLE CASE STRUCTURE - WHITE POOL LINER - FILTRATION SYSTEM - AIR HYDROMASSAGE - LED SPOT - WICKER PANELS | 220x220x70 | 180x140x55 | 1200 | 80x230x h150 | 172 | 1 | PLAYA1 COFFEE | KITDVPLASB1BICF1G | **68198** |
| | | | | | | | PLAYA1 WHITE | KITDVPLASB1BIBI1G | **68199** |
| | | | | | | | PLAYA1 GREY | KITDVPLASB1BIGR1G | **69350** |
| **Bubbles Version.** **Playa 2 - 320 x 220.** SINGLE CASE STRUCTURE - WHITE POOL LINER - FILTRATION SYSTEM - AIR HYDROMASSAGE - LED SPOT - WICKER PANELS | 220x320x70 | 180x240x55 | 2000 | 80x230x h180 | 198 | 1 | PLAYA2 COFFEE | KITDVPLASB2BICF1G | **68197** |
| | | | | | | | PLAYA2 WHITE | KITDVPLASB2BIBI1G | **68200** |
| | | | | | | | PLAYA2 GREY | KITDVPLASB2BIGR1G | **69353** |
| **Bubbles Version.** **Playa 3 - 420 x 220.** SINGLE CASE STRUCTURE - WHITE POOL LINER - FILTRATION SYSTEM - AIR HYDROMASSAGE - LED SPOT - WICKER PANELS | 220x420x70 | 180x340x55 | 3000 | 80x230x h180 | 213 | 1 | PLAYA3 COFFEE | KITDVPLASB3BICF1G | **69359** |
| | | | | | | | PLAYA3 WHITE | KITDVPLASB3BIBI1G | **69360** |
| | | | | | | | PLAYA3 GREY | KITDVPLASB3BIGR1G | **69362** |

**POOL WARRANTY: 5 YEARS. ACCESSORIES WARRANTY: 2 YEARS.**

# LAGHETTO ABOVE GROUND POOLS

## Playa model HEATING & BUBBLES version

New

PLAYA

**Sunbed (optional):**
Tempotest® fabric finish available in several colors.

natural - N | water - W | brown - B | grey - G

**Laghetto filtration system composed of:**

One wall skimmer complete with pre-filter and cartridge filter. Included: suction plate and brush for bottom cleaning.
ABS self-extinguishing technical box including: 115 W, 220 V, induction circulation pump, max flow 7000 l/h, max prevalence 3 m.
230 V, 2000 W IPX5 electrical heater.
Heater max. power: + 15° C granted than the temperature of the version without heater (with isothermic cover installed).
220 V, 700 W absorption, IPX5 class II, max flow 70 mc/h, max pressure 190 mbar, air blower. Class II, 220/12 V 10 VA, Led transformer.
Control unit complete with keyboard and display (IPX5 protected) for heating, filtration cycles, blower and Led control.

**Exterior panels:**
Handwoven fiber.

Internal structure



Laghetto white - BI
coffee - CF
grey - GR

**Liner:**
white - BI

**LED spotlight: high brightness spotlight**

| Description | Total dimensions (W x L x H) cm | Water dimensions (W x L x H) cm | Water volume Litres | Packaging dimensions | Total gross weight Kg | N. pallets | Color panel model | Laghetto reference | Code |
|---|---|---|---|---|---|---|---|---|---|
| **Heating & bubbles version.** **Playa 1 - 220 x 220.** SINGLE CASE STRUCTURE - WHITE POOL LINER - FILTRATION SYSTEM - HEATER AND AIR HYDROMASSAGE - LED SPOT - ISOTHERMIC COVER - WICKER PANELS | 220x220x70 | 180x140x55 | 1200 | 80x230x h150 | 172 | 1 | PLAYA1 COFFEE | KITDVPLARB1BICF1G | **67342** |
| | | | | | | | PLAYA1 WHITE | KITDVPLARB1BIBI1G | **67343** |
| | | | | | | | PLAYA1 GREY | KITDVPLARB1BIGR1G | **69352** |
| **Heating & bubbles version.** **Playa 2 - 320 x 220.** SINGLE CASE STRUCTURE - WHITE POOL LINER - FILTRATION SYSTEM - HEATER AND AIR HYDROMASSAGE - LED SPOT - ISOTHERMIC COVER - WICKER PANELS | 220x320x70 | 180x240x55 | 2000 | 80x230x h180 | 198 | 1 | PLAYA2 COFFEE | KITDVPLARB2BICF1G | **67344** |
| | | | | | | | PLAYA2 WHITE | KITDVPLARB2BIBI1G | **67345** |
| | | | | | | | PLAYA2 GREY | KITDVPLARB2BIGR1G | **69354** |
| **Heating & bubbles version.** **Playa 3 - 420 x 220.** SINGLE CASE STRUCTURE - WHITE POOL LINER - FILTRATION SYSTEM - HEATER AND AIR HYDROMASSAGE - LED SPOT - ISOTHERMIC COVER - WICKER PANELS | 220x420x70 | 180x340x55 | 3000 | 80x230x h180 | 213 | 1 | PLAYA3 COFFEE | KITDVPLARB3BICF1G | **69361** |
| | | | | | | | PLAYA3 WHITE | KITDVPLARB3BIBI1G | **69363** |
| | | | | | | | PLAYA3 GREY | KITDVPLARB3BIGR1G | **69364** |

**POOL WARRANTY: 5 YEARS. ACCESSORIES WARRANTY: 2 YEARS.**

## LAGHETTO ABOVE GROUND POOLS

Playa accessories

# PLAYA

| Description | Packaging dimensions | Total gross weight Kg | Number of packages | Laghetto reference | Code |
|---|---|---|---|---|---|
| Playa 1 - 220x220 cm - standard cover | 30x30x h15 | 3 | 1 | CODVPLA1 | **67346** |
| Playa 2 - 220x320 cm - standard cover | 30x30x h15 | 3 | 1 | CODVPLA2 | **67348** |
| Playa 3 - 220x420 cm - standard cover | 30x30x h15 | 4 | 1 | CODVPLA3 | **69408** |
| Sunbed Tempotest® fabric finish - natural color | 60x70x h25 | 3 | 1 | DVPLALPN | **67347** |
| Sunbed Tempotest® fabric finish - water color | 60x70x h25 | 3 | 1 | DVPLALPW | **68616** |
| Sunbed Tempotest® fabric finish - brown color | 60x70x h25 | 3 | 1 | DVPLALPB | **69405** |
| Sunbed Tempotest® fabric finish - grey color | 60x70x h25 | 3 | 1 | DVPLALPG | **69407** |
| Playa 1 isothermic foldable cover | 60x70x h50 | 2 | 1 | COGIDVPLA11G | **70889** |
| Playa 2 isothermic foldable cover | 60x70x h50 | 2 | 1 | COGIDVPLA21G | **70890** |
| Playa 3 isothermic foldable cover | 60x70x h50 | 3 | 1 | COGIDVPLA31G | **70891** |

**Sunbed Tempotest® fabric finish**

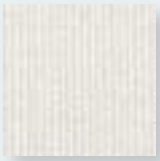
natural - N


water - W

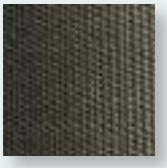
brown - B


grey - G



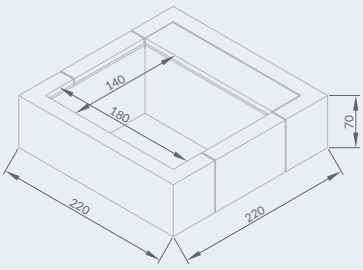

PLAYA 1

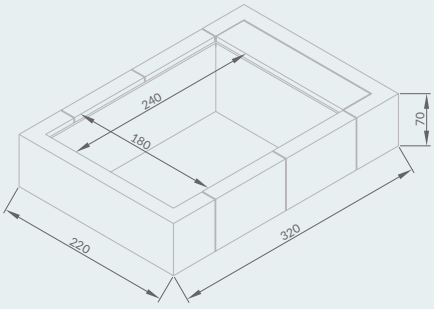

PLAYA 2

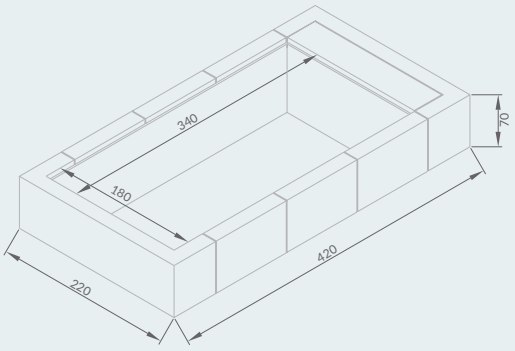

PLAYA 3

| Model | Box | Water size (m) | General dimensions (m) | Water height (cm) | Total height (cm) | Volume (l) |
|---|---|---|---|---|---|---|
| **PLAYA1** | 1 | 1.40 x 1.80 | 2.20 x 2.20 | 55 | 70 | 1200 |
| **PLAYA2** | 1 | 2.40 x 1.80 | 3.20 x 2.20 | 55 | 70 | 2000 |
| **PLAYA3** | 1 | 3.40 x 1.80 | 4.20 x 2.20 | 55 | 70 | 3000 |

## LAGHETTO ABOVE GROUND POOLS

### PLAYA for professional use

New

Including floor drain for the quick emptying of the pool. Ideal for use in Hotels and other accommodation facilities.
Available in MiniPool and Heating & Bubble versions, sizes 1 and 2.

PLAYA



| Description | Laghetto reference | Code |
|---|---|---|
| PLAYA 1 - Heating & Bubble + main drain - Laghetto white | KITDVPLARB1BIBISF | **71865** |
| PLAYA 1 - Heating & Bubble + main drain - Grey | KITDVPLARB1BIGRSF | **71866** |
| PLAYA 1 - Heating & Bubble + main drain - Coffee | KITDVPLARB1BICFSF | **71867** |
| PLAYA 2 - Heating & Bubble + main drain - Laghetto white | KITDVPLARB2BIBISF | **71868** |
| PLAYA 2 - Heating & Bubble + main drain - Grey | KITDVPLARB2BIGRSF | **71869** |
| PLAYA 2 - Heating & Bubble + main drain - Coffee | KITDVPLARB2BICFSF | **71870** |

## LAGHETTO ABOVE GROUND POOLS

### PLAYA LIVING

New

Aluminium structure, wicker panels.

PLAYA LIVING



#### AVAILABLE DIMENIONS (cm)

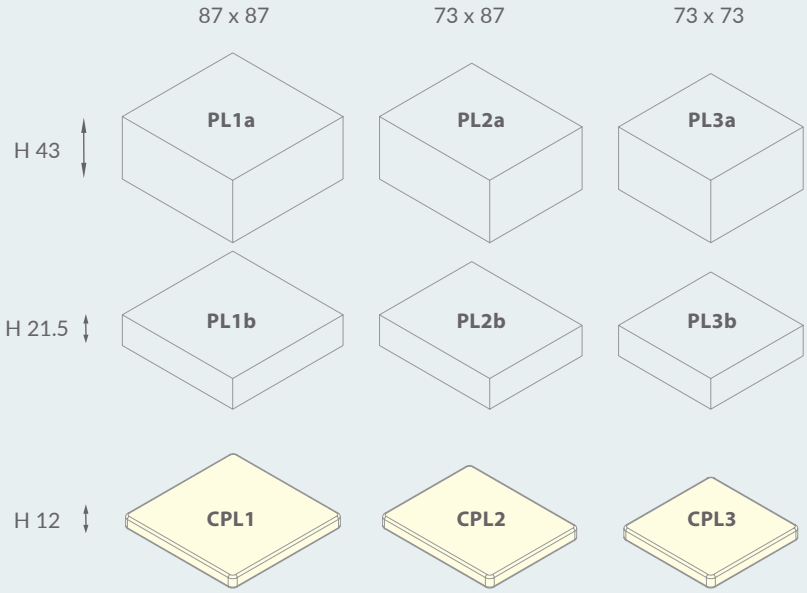


#### AVAILABLE COLORS

**Handwoven fiber**



white - BI



coffee - CF



grey - GR

**Tempotest® fabric cushions**

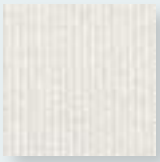

natural - N



water - W

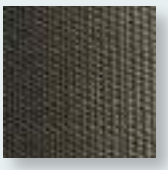

brown - B



grey - G

#### CONFIGURATIONS EXAMPLES

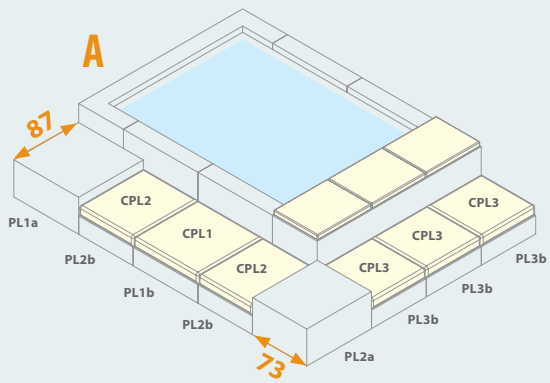


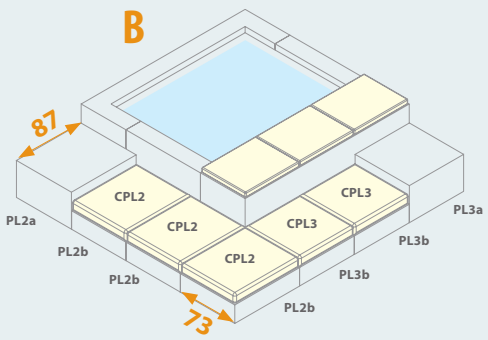

## LAGHETTO ABOVE GROUND POOLS

### PLAYA LIVING seat element with reclinable backrest

New

PLAYA LIVING

Seat element with four positions reclinable backrest for Playa Living that can be combined with other standard elements.

Panel's finish in handwoven synthetic fibre on an aluminium frame.

Available in two sizes and in three colours: Coffee, Grey and Laghetto White.



**AVAILABLE DIMENIONS (cm)**

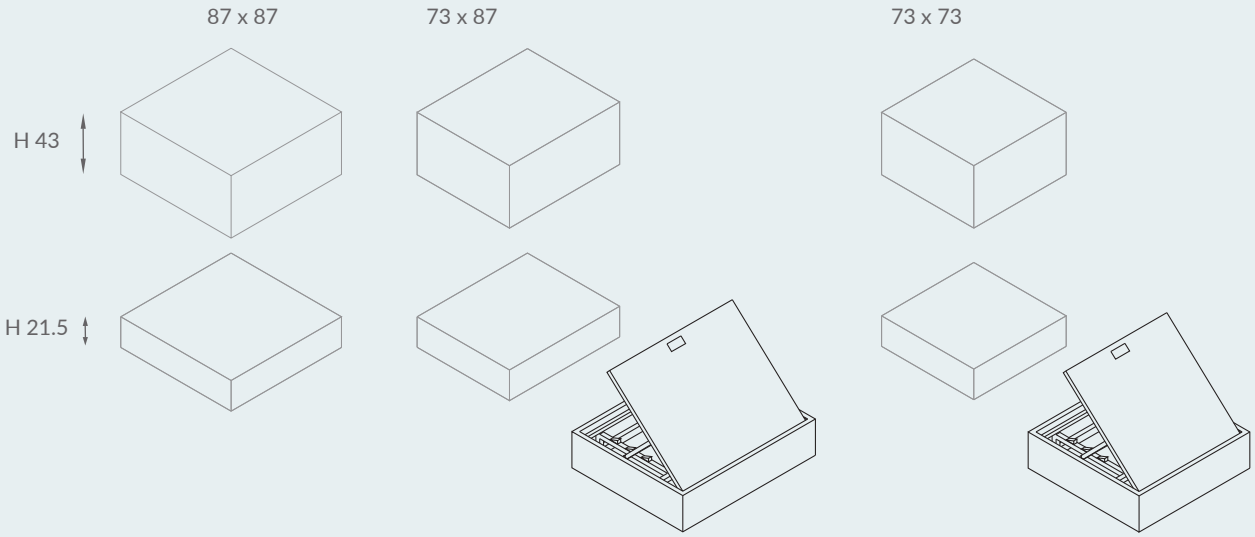

## LAGHETTO ABOVE GROUND POOLS

PLAYA LIVING seat element with reclinable backrest

New

PLAYA LIVING

### CONFIGURATION EXAMPLES

A

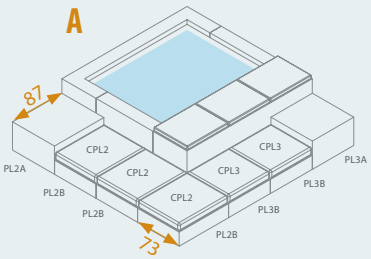


B

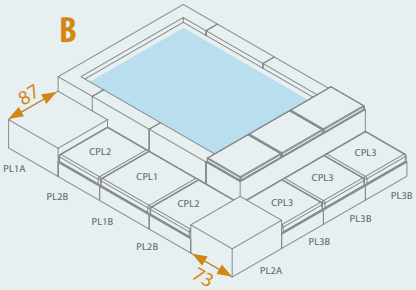


C

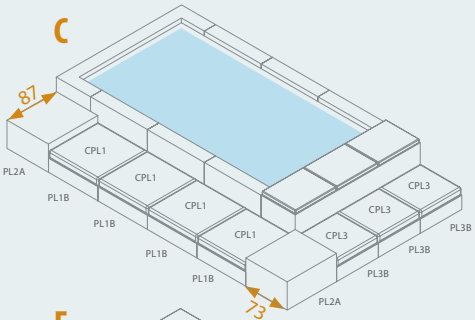


D

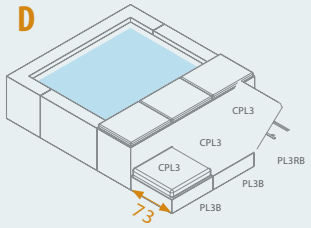


E

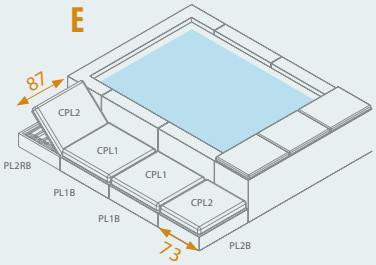


F

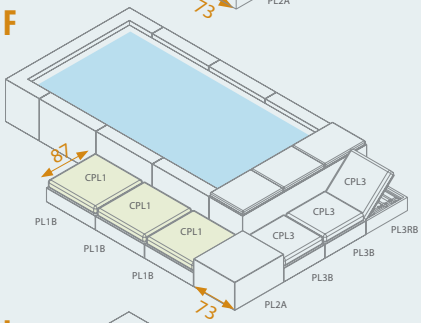


G

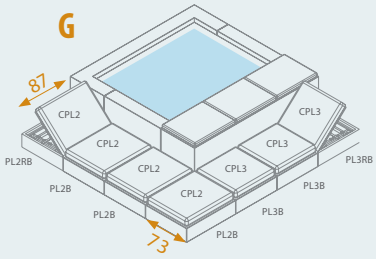


H

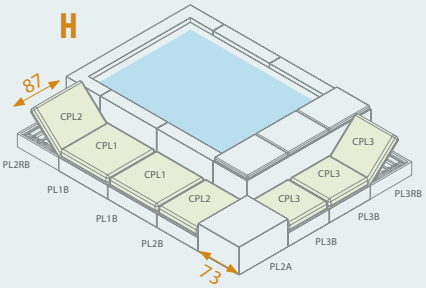


I

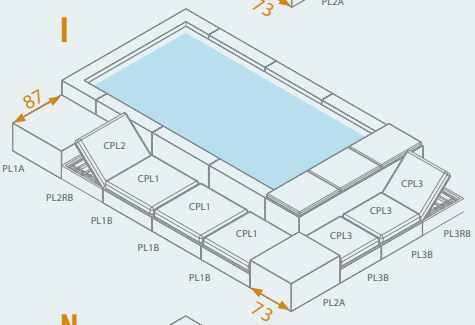


L

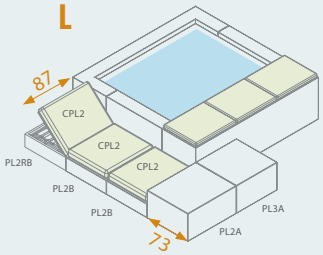


M

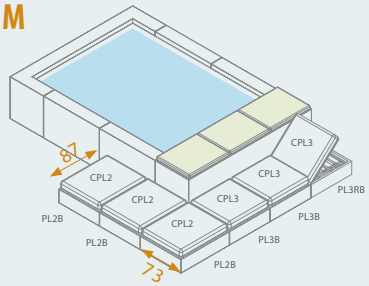


N

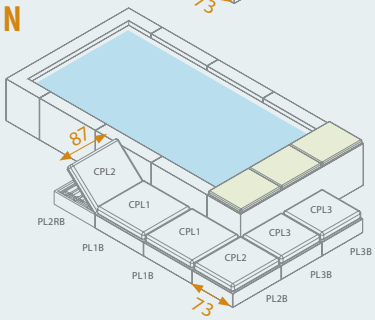

## LAGHETTO ABOVE GROUND POOLS

### PLAYA LIVING - Elements

New

PLAYA LIVING

| Description | Total dimensions (W x L x H) cm | Total gross weight Kg | number of packages | Color model | Laghetto reference | Code |
|---|---|---|---|---|---|---|
| Structure 87X87 43 cm Coffe Playa Living | 87x87 h.43 | 10 | 1 | COFFEE | PL1aCF | **PL1ACF** |
| Structure 87X87 43 cm White Playa Living | 87x87 h.43 | 10 | 1 | WHITE | PL1aBI | **PL1ABI** |
| Structure 87X87 43 cm Grey Playa Living | 87x87 h.43 | 10 | 1 | GREY | PL1aGR | **PL1AGR** |
| Structure 73X87 43 cm Coffe Playa Living | 73x87 h.43 | 9 | 1 | COFFEE | PL2aCF | **PL2ACF** |
| Structure 73X87 43 cm White Playa Living | 73x87 h.43 | 9 | 1 | WHITE | PL2aBI | **PL2ABI** |
| Structure 73X87 43 cm Grey Playa Living | 73x87 h.43 | 9 | 1 | GREY | PL2aGR | **PL2AGR** |
| Structure 73X73 43 cm Coffe Playa Living | 73x73 h.43 | 8 | 1 | COFFEE | PL3aCF | **PL3ACF** |
| Structure 73X73 43 cm White Playa Living | 73x73 h.43 | 8 | 1 | WHITE | PL3aBI | **PL3ABI** |
| Structure 73X73 43 cm Grey Playa Living | 73x73 h.43 | 8 | 1 | GREY | PL3aGR | **PL3AGR** |
| Structure 87X87 21.5 cm Coffe Playa Living | 87x87 h.21,5 | 9 | 1 | COFFEE | PL1bCF | **PL1BCF** |
| Structure 87X87 21.5 cm White Playa Living | 87x87 h.21,5 | 9 | 1 | WHITE | PL1bBI | **PL1BBI** |
| Structure 87X87 21.5 cm Grey Playa Living | 87x87 h.21,5 | 9 | 1 | GREY | PL1bGR | **PL1bGR** |
| Structure 73X87 21.5 cm Coffe Playa Living | 73x87 h.21,5 | 8 | 1 | COFFEE | PL2bCF | **PL2BCF** |
| Structure 73X87 21.5 cm White Playa Living | 73x87 h.21,5 | 8 | 1 | WHITE | PL2bBI | **PL2BBI** |
| Structure 73X87 21.5 cm Grey Playa Living | 73x87 h.21,5 | 8 | 1 | GREY | PL2bGR | **PL2BGR** |
| Structure 73X73 21.5 cm Coffe Playa Living | 73x73 h.21,5 | 7 | 1 | COFFEE | PL3bCF | **PL3BCF** |
| Structure 73X73 21.5 cm White Playa Living | 73x73 h.21,5 | 7 | 1 | WHITE | PL3bBI | **PL3BBI** |
| Structure 73X73 21.5 cm Grey Playa Living | 73x73 h.21,5 | 7 | 1 | GREY | PL3bGR | **PL3BGR** |
| Cushion 87X87 12 cm Natural Playa Living | 87x87 h.12 | 3 | 1 | NATURAL | CPL1N | **CPL1N** |
| Cushion 87X87 12 cm Water Playa Living | 87x87 h.12 | 3 | 1 | WATER | CPL1W | **CPL1W** |
| Cushion 87X87 12 cm Brown Playa Living | 87x87 h.12 | 3 | 1 | BROWN | CPL1B | **CPL1B** |
| Cushion 87X87 12 cm Grey Playa Living | 87x87 h.12 | 3 | 1 | GREY | CPL1G | **CPL1G** |
| Cushion 73X87 12 cm Natural Playa Living | 73x87 h.12 | 3 | 1 | NATURAL | CPL2N | **CPL2N** |
| Cushion 73X87 12 cm Water Playa Living | 73x87 h.12 | 3 | 1 | WATER | CPL2W | **CPL2W** |
| Cushion 73X87 12 cm Brown Playa Living | 73x87 h.12 | 3 | 1 | BROWN | CPL2B | **CPL2B** |
| Cushion 73X87 12 cm Grey Playa Living | 73x87 h.12 | 3 | 1 | GREY | CPL2G | **CPL2G** |
| Cushion 73X73 12 cm Natural Playa Living | 73x73 h.12 | 2 | 1 | NATURAL | CPL3N | **CPL3N** |
| Cushion 73X73 12 cm Water Playa Living | 73x73 h.12 | 2 | 1 | WATER | CPL3W | **CPL3W** |
| Cushion 73X73 12 cm Brown Playa Living | 73x73 h.12 | 2 | 1 | BROWN | CPL3B | **CPL3B** |
| Cushion 73X73 12 cm Grey Playa Living | 73x73 h.12 | 2 | 1 | GREY | CPL3G | **CPL3G** |
| Seat element with reclinable backrest | 73x87 h.21.5 | 8 | 1 | LAGHETTO WHITE | PL2RBB | **PL2RBBI** |
| Seat element with reclinable backrest | 73x87 h.21.5 | 8 | 1 | GREY | PL2RBG | **PL2RBGR** |
| Seat element with reclinable backrest | 73x87 h.21.5 | 8 | 1 | COFFEE | PL2RBC | **PL2RBCF** |
| Seat element with reclinable backrest | 73x73 h.21.5 | 7 | 1 | LAGHETTO WHITE | PL3RBB | **PL3RBBI** |
| Seat element with reclinable backrest | 73x73 h.21.5 | 7 | 1 | GREY | PL3RBG | **PL3RBGR** |
| Seat element with reclinable backrest | 73x73 h.21.5 | 7 | 1 | COFFEE | PL3RBC | **PL3RBCF** |

## LAGHETTO ABOVE GROUND POOLS

DOLCEVITA model




## DOLCEVITA ABOVE GROUND POOLS

**Dolcevita 2019 above-ground collection includes 8 standard sizes but you can also request other sizes that are compatible with the modularity of the system.**

| MODEL (SIZES) | WATER SIZE (m) | TOTAL DIMENSIONS (m) | WATER / POOL HEIGHT (cm) | VOLUME ($m^3$) |
|---|---|---|---|---|
| 24 | 2 x 4 | 2.40 x 4.40 | | 9.6 |
| 25 | 2 x 5 | 2.40 x 5.40 | H 120 | 12 |
| 35 | 3 x 5 | 3.40 x 5.40 | | 18 |
| 36 | 3 x 6 | 3.40 x 6.40 | H 130 | 21.6 |
| 37 | 3 x 7 | 3.40 x 7.40 | | 25.2 |
| 48 | 4 x 8 | 4.40 x 8.40 | | 38.4 |
| 49 | 4 x 9 | 4.40 x 9.40 | | 43.2 |
| 510 | 5 x 10 | 5.40 x 10.40 | | 60 |



# LAGHETTO ABOVE GROUND POOLS

## DOLCEVITA model

New

## FEATURES:

- 3 collections available: DIVA, RATTAN & NAKED. All the collection finishes include complete kits where the accessories (from filtration to ladders) are top of the line.
- A special alignment and stabilization kit (optional) is also available. This pack has the function of preventing the normal structural beddings which may occur during filling of the pool, thereby fixing permanently the structure of the pool. The kit does not allow further regulations once the pool is full of water.
- The liner is made of a Laghetto proprietary German made PVC coated polyester fabric treated with a special coating that provides extra protection against UV light and moistures. The range of colors include: Laghetto blue, sand and white.
- The LED spot light system is included in every DOLCEVITA complete kit. Pool only or liner only combinations have pre-made holes for the LED spot light. Please note in this case to order also a wall fitting to close the hole of a LED spot light.
- **DIFFERENT SIZES ARE ALSO AVAILABLE UPON REQUEST.**

  If you need a full modular size (ex: 4x7 meters water size) consider the perimeter of the pool and calculate as below:

  **PRICE OF THE KIT 4x8 ÷ PERIMETER 4x8 (24 ML) x PERIMETER 4x7 (22 ML) + (additional fixed cost) = PRICE FOR KIT 4x7**

  For all the size combination with half module sides the price is the one of the bigger full size one adding the additional cost.

  Ex: A pool 3,5 x 7,5 meters have the same price of a 4x8 meters, plus the additional cost.

  **Dolcevita of the DIVA collection allows the half module sizes only on one side.**

  Ex: It is possible to have a 3,5 x 7 meters, but not a 3,5 x 7,5 meters.

  **ATTENTION:** This formula is not valid for sizes less than 2x4.
- 5 years warranty on pool liner and pool metal structural parts. 2 years warranty on all other kit finishes and accessories.

## TECHNICAL FEATURES:

Liner in polyester and polymer fibers with high strength and durability.
Structure in stainless steel and hot galvanized steel protected with epoxy paint (ZSV-TEC system).

### Standard equipment

- 6 / 10 / 15 $m^3/h$ sand filtration systems
- LED spotlight
- Access ladder
- Vacuum cleaner

### Optional accesories

- Base kit for mounting directly on the ground without cement works.
- Structural components for buried or semi-buried assembly.
- Counter-current swimming system (for the DIVA LTI, YACHT and NAKED models).
- Heat pump for water heating.
- Isothermal cover for summer and protector for winter.
- Electric box for protection and maneuver of pump and lights.

### Esthetic finish collection

**Diva** Integral exterior coating in synthetic fiber hand-woven on a painted aluminum frame.
**Rattan** Exterior panels in synthetic fiber hand-woven on a painted aluminum frame. Upper edge in synthetic wood "Eco-wood".


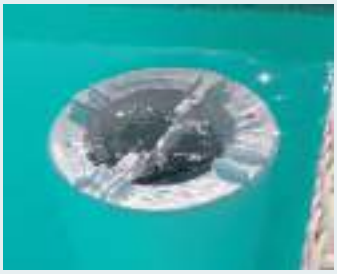



## LAGHETTO ABOVE GROUND POOLS

DOLCEVITA model

New

### FEATURES

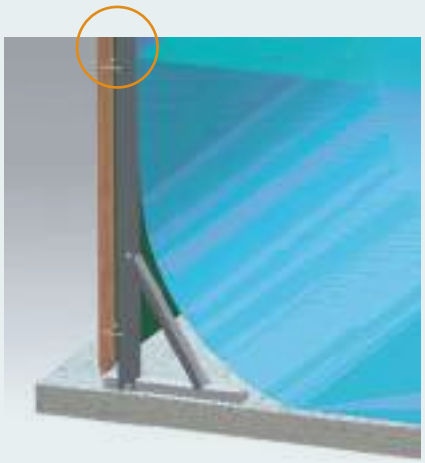

**TRELLIS PILLARS**
**Powder coated hot galvanized steel with stainless steel piece of support.**

**TRELLIS SPARS**
**Powder coated hot galvanized steel.**

**NUTS AND BOLTS**
**Stainless steel with anti-grip nuts.**

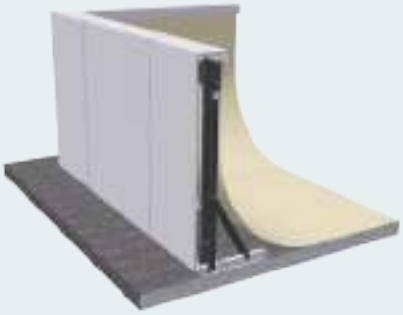



*Pool liner*



*Plastic Wood Coping*



*Diva panel*

**LINER**
**Made of PVC coated polyester fabric membrane, is incredibly strong (it easily pass DIN 53354 test up to traction of 430 Kg on 5 cm); it is treated with a special coating that prevents dirt from attaching to exposed areas and provides protection against damage caused by UV light, to be very durable.**

**DOLCEVITA ABOVEGROUND TOPRAIL FINISH**
**Rattan model toprail finish is a dedicated composite wood made for us exclusively by Plastic Wood.**
**Diva model toprail finish is integrated in the design of the special wicker panel.**

**DOLCEVITA PANELS**
**Dolcevita is available in two different panels options: wicker with wicker corner pieces for the Rattan model or the exclusive solution created for the DIVA model where the wicker panels also cover the top rail of the structure.**

# LAGHETTO ABOVE GROUND POOLS

## DOLCEVITA model



*Dolcevita Diva ladder*



*Laghetto Led Spot*



*AstralPool sand filters*

### DOLCEVITA LADDERS

**The Dolcevita models have two different kinds of ladder to access the pool.**
**Rattan kit include a ladder with the liftable external part to avoid the access of the kids when the pool is unattended or unused.**
**DIVA kit has a dedicated luxury grade ladder.**

### LED SPOT LIGHTS

**Every Dolcevita, no matter what finish, comes standard with Laghetto Led spot lights.**
**This Led spot have a peerless luminous efficiency, very low power consumption (less than 8 W) and an unmatched durability.**

### SAND FILTRATION SYSTEMS

**The technical partnership between Piscine Laghetto and AstralPool introduces the 6, 10 and 15 $m^3$/h sand filters in all swimming pool kits.**



- **Every Dolcevita pool kit also include a vacuum cleaner (pipe length varies according to the pool size and the number of skimmers used).**

## LAGHETTO ABOVE GROUND POOLS

### DOLCEVITA DIVA LTI model

New

- Structure and pool liner.
- Filtration system - Attention: the filtration system doesn't include the electrical panel.
- Vacuum cleaner system.
- LED spot lights:
  - 1 Spot, standard placement until model 36.
  - 2 Spots, standard placement from model 37 until model 48.
  - 2 Spots, custom placement for size 49.
- Panels and top edge integrated in one piece panel made of wicker available in three colors: Coffee, Grey or Laghetto white.
- Pool liner (color choice: light blue, sand or white).
- Diva version specific luxury ladder.
- Attention: only available as complete kit and only in 2.5 – 3 – 4 m width.
- Wooden & steel panels supports.









| Laghetto model | Description | Total dimensions (W x L x H) cm | Water dimensions (W x L x H) cm | Water volume Litres | Packaging Dimensions | Total gross weight Kg | Laghetto reference | Code |
|---|---|---|---|---|---|---|---|---|
| LTI 254 | Swimming pool 2.5 x 4 m DOLCEVITA Diva LTI with sand filter 10 m³ / h, 1 LED spotlight | 290x510 | 250x400x120 | 12,000 | 2 pallets: 100 x 130 x 240 h 100 x 120 x 130 h | 355 | KITDVC254xS10DG | **D24XS10L** |
| LTI 255 | Swimming pool 2.5 x 5 m DOLCEVITA Diva LTI with sand filter 10 m³ / h, 1 LED spotlight | 290x610 | 250x500x120 | 15,000 | 2 pallets: 100 x 130 x 240 h 100 x 120 x 150 h | 375 | KITDVC255xS10DG | **D25XS10L** |
| LTI 35 | Swimming pool 3 x 5 m DOLCEVITA Diva LTI with sand filter 10 m³ / h, 1 LED spotlight | 340x610 | 300x500x120 | 18,000 | 2 pallets: 100 x 130 x 240 h 100 x 120 x 200 h | 410 | KITDVC35xS10DG | **D35XS10L** |
| LTI 36 | Swimming pool 3 x 6 m DOLCEVITA Diva LTI with sand filter 10 m³ / h, 1 LED spotlight | 340x710 | 300x600x120 | 21,600 | 2 pallets: 100 x 130 x 240 h 100 x 120 x 200 h | 455 | KITDVC36xS10DG | **D36XS10L** |
| LTI 37 | Swimming pool 3 x 7 m DOLCEVITA Diva LTI with sand filter 10 m³ / h, 2 LED spotlights | 340x810 | 300x700x120 | 25,200 | 2 pallets: 100 x 130 x 240 h 100 x 120 x 210 h | 492 | KITDVC37xS10DG | **D37XS10L** |
| LTI 48 | Swimming pool 4 x 8 m DOLCEVITA Diva LTI with sand filter 10 m³ / h, 2 LED spotlights | 440x910 | 400x800x120 | 38,400 | 2 pallets: 100 x 130 x 250 h 100 x 120 x 230 h | 675 | KITDVC48xS10DG | **D48XS10L** |
| LTI 49 | Swimming pool 4 x 9 m DOLCEVITA Diva LTI with sand filter 15 m³ / h, 2 LED spotlights | 440x1010 | 400x900x120 | 43,200 | 2 pallets: 100 x 150 x 240 h 100 x 120 x 240 h | 700 | KITDVC49xS15DG | **D49XS15L** |

Substitute **X** for the following 4 letters, according to the desired color combination:

| | |
|---|---|
| **BICF** | white liner and coffee panels |
| **BIGR** | white liner and grey panels |
| **BIBI** | white liner and white panels |
| **BECF** | beige liner and coffee panels |
| **BEGR** | beige liner and grey panels |
| **BEBI** | beige liner and white panels |
| **AZCF** | light blue liner and coffee panels |
| **AZGR** | light blue liner and grey panels |
| **AZBI** | light blue liner and white panels |

# LAGHETTO ABOVE GROUND POOLS

## DOLCEVITA DIVA model

New

- Structure and pool liner.
- Filtration system - Attention: the filtration system doesn't include the electrical panel.
- Vacuum cleaner system.
- LED spot lights:
  - 1 Spot, standard placement until model 36.
  - 2 Spots, standard placement from model 37 until model 48.
  - 2 Spots, custom placement for sizes 49 and 510.
- Panels and top edge integrated in one piece panel made of wicker available in three colors: Coffee, Grey or Laghetto white.
- Pool liner (color choice: Light blue, Sand or White).
- Diva version specific luxury ladder.
- Wooden & steel panels supports.





| Laghetto model | Description | Total dimensions (W x L x H) cm | Water dimensions (W x L x H) cm | Water volume Litres | Packaging dimensions cm | Total gross weight Kg | Laghetto reference | Code |
|---|---|---|---|---|---|---|---|---|
| DIVA 24 | Swimming pool 2 x 4 m DOLCEVITA Diva with sand filter 10 m³ / h, 1 LED spotlight | 240x440 | 200x400x120 | 9,600 | 2 pallets: 100 x 130 x 240 h 100 x 120 x 120 h | 332 | KITDVC24XS10D | **D24XS10** |
| DIVA 25 | Swimming pool 2 x 5 m DOLCEVITA Diva with sand filter 10 m³ / h, 1 LED spotlight | 240x540 | 200x500x120 | 12,000 | 2 pallets: 100 x 130 x 240 h 100 x 120 x 120 h | 356 | KITDVC25XS10D | **D25XS10** |
| DIVA 35 | Swimming pool 3 x 5 m DOLCEVITA Diva with sand filter 10 m³ / h, 1 LED spotlight | 340x540 | 300x500x120 | 18,000 | 2 pallets: 100 x 130 x 240 h 100 x 120 x 180 h | 389 | KITDVC35XS10D | **D35XS10** |
| DIVA 36 | Swimming pool 3 x 6 m DOLCEVITA Diva with sand filter 10 m³ / h, 1 LED spotlight | 340x640 | 300x600x120 | 21,600 | 2 pallets: 100 x 130 x 240 h 100 x 110 x 180 h | 435 | KITDVC36XS10D | **D36XS10** |
| DIVA 37 | Swimming pool 3 x 7 m DOLCEVITA Diva with sand filter 10 m³ / h, 2 LED spotlights | 340x740 | 300x700x120 | 25,200 | 2 pallets: 100 x 130 x 240 h 100 x 110 x 190 h | 472 | KITDVC37XS10D | **D37XS10** |
| DIVA 48 | Swimming pool 4 x 8 m DOLCEVITA Diva with sand filter 10 m³ / h, 2 LED spotlights | 440x840 | 400x800x120 | 38,400 | 2 pallets: 100 x 130 x 250 h 100 x 120 x 190 h | 636 | KITDVC48XS10D | **D48XS10** |
| DIVA 49 | Swimming pool 4 x 9 m DOLCEVITA Diva with sand filter 15 m³ / h, 2 LED spotlights | 440x940 | 400x900x120 | 43,200 | 2 pallets: 100 x 130 x 240 h 100 x 120 x 220 h | 680 | KITDVC49XS15D | **D49XS15** |
| DIVA 510 | Swimming pool 5 x 10 m DOLCEVITA Diva with sand filter 15 m³ / h, 2 LED spotlights | 540x1040 | 500x1000x120 | 60,000 | 3 pallets: 100 x 130 x 170 h 100 x 120 x 170 h 100 x 120 x 220 h | 750 | KITDVC510XS15D | **D510XS15** |

Substitute **X** for the following 4 letters, according to the desired color combination:

| | | | |
|---|---|---|---|
| **BICF** | white liner and coffee panels | **BEBI** | beige liner and white panels |
| **BIGR** | white liner and grey panels | **AZCF** | light blue liner and coffee panels |
| **BIBI** | white liner and white panels | **AZGR** | light blue liner and grey panels |
| **BECF** | beige liner and coffee panels | **AZBI** | light blue liner and white panels |
| **BEGR** | beige liner and grey panels | | |

## LAGHETTO ABOVE GROUND POOLS

### DOLCEVITA DIVA model with automatic pool cover

New

Additional element for Dolcevita Diva with built-in technical compartment line, automatic pool cover and decorative water cascade.

Covering panel in handwoven synthetic fibre on an aluminium frame proposed in three colours: Coffee, Grey and Laghetto White.

Available for Dolcevita Diva water size's width 2.5 - 3 - 4 m. and max 7 m. lenght.

**Accessories:**

- Water blade fountain on the cover equipment room.
- Two-piece ladder for floating covers.





| Laghetto model | Description | Total dimensions (W x L x H) cm | Water dimensions (W x L x H) cm | Water volume Litres | Packaging dimensions cm | Total gross weight Kg | Laghetto reference | Code |
|---|---|---|---|---|---|---|---|---|
| DIVA 35 | Laghetto white<br>6 m³ sand filtering system<br>pool cover + water cascade | 330x605 | 300x500 | 18,000 | 4 pallets:<br>350x60x80 (1)<br>100x130x240 (1)<br>100x120x130 (1)<br>130x140x180 (1) | 700 | KITDVC35BIBIS6DT | **DVC35BIBIS6DT** |
| DIVA 36 | Laghetto white<br>6 m³ sand filtering system<br>pool cover + water cascade | 330x705 | 300x600 | 21,600 | 4 pallets:<br>350x60x80 (1)<br>100x130x240 (1)<br>100x120x150 (1)<br>130x140x200 (1) | 750 | KITDVC36BIBIS6DT | **DVC36BIBIS6DT** |

# LAGHETTO ABOVE GROUND POOLS

## DOLCEVITA RATTAN model

New

- Structure and pool liner.
- Filtration system - Attention: the filtration system doesn't include the electrical panel.
- Vacuum cleaner system.
- LED spot lights:
  - 1 Spot, standard placement until model 36.
  - 2 Spots, standard placement from model 37 until model 48.
  - 2 Spots, custom placement for sizes 49 and 510.
- Wicker panels available in two colors: coffee or grey, wicker corner pieces and pool liner (color choice: light blue, sand or white)
- Dolcevita composite wood top edge.
- Dolcevita safety ladder.
- Wooden panels supports.





| Laghetto model | Description | Total dimensions (W x L x H) cm | Water dimensions (W x L x H) cm | Water volume Litres | Packaging dimensions | Total gross weight Kg | Laghetto reference | Code |
|---|---|---|---|---|---|---|---|---|
| RATTAN 24 | Swimming pool 2 x 4 m DOLCEVITA Rattan with sand filter 10 m³ / h, 1 LED spotlight | 240x440 | 200x400x120 | 9,600 | 1 pallet: 100 x 130 x 240 h | 357 | KITDVC24xS10R | **2410X** |
| RATTAN 25 | Swimming pool 2 x 5 m DOLCEVITA Rattan with sand filter 10 m³ / h, 1 LED spotlight | 240x540 | 200x500x120 | 12,000 | 1 pallet: 100 x 130 x 240 h | 386 | KITDVC25xS10R | **2510X** |
| RATTAN 35 | Swimming pool 3 x 5 m DOLCEVITA Rattan with sand filter 10 m³ / h, 1 LED spotlight | 340x540 | 300x500x120 | 18,000 | 1 pallet: 100 x 130 x 240 h | 432 | KITDVC35xS10R | **3510X** |
| RATTAN 36 | Swimming pool 3 x 6 m DOLCEVITA Rattan with sand filter 10 m³ / h, 1 LED spotlight | 340x640 | 300x600x120 | 21,600 | 2 pallets: 100 x 130 x 200 h 100 x 120 x 110 h | 565 | KITDVC36xS10R | **3610X** |
| RATTAN 37 | Swimming pool 3 x 7 m DOLCEVITA Rattan with sand filter 10 m³ / h, 2 LED spotlights | 340x740 | 300x700x120 | 25,200 | 2 pallets: 100 x 130 x 240 h 100 x 120 x 135 h | 575 | KITDVC37xS10R | **3710X** |
| RATTAN 48 | Swimming pool 4 x 8 m DOLCEVITA Rattan with sand filter 10 m³ / h, 2 LED spotlights | 440x840 | 400x800x120 | 38,400 | 2 pallets: 100 x 130 x 240 h 100 x 120 x 140 h | 645 | KITDVC48xS10R | **4810X** |
| RATTAN 49 | Swimming pool 4 x 8 m DOLCEVITA Rattan with sand filter 15 m³ / h, 2 LED spotlights | 440x940 | 400x900x120 | 43,200 | 2 pallets: 100 x 130 x 240 h 100 x 120 x 200 h | 720 | KITDVC49xS15R | **4915X** |
| RATTAN 510 | Swimming pool 5 x 10 m DOLCEVITA Rattan with sand filter 15 m³ / h, 2 LED spotlights | 540x1040 | 500x1000x120 | 60,000 | 2 pallets: 100 x 130 x 240 h 100 x 120 x 210 h | 860 | KITDVC510xS15R | **51015X** |

Substitute **X** for the following 4 letters, according to the desired color combination:

**BICF** white liner and coffee panels
**BIGR** white liner and grey panels
**BECF** beige liner and coffee panels
**BEGR** beige liner and grey panels
**AZCF** light blue liner and coffee panels
**AZGR** light blue liner and grey panels

# LAGHETTO ABOVE GROUND POOLS

## DOLCEVITA NAKED model

- Structure and pool liner. X = color choice: light blue (AZ), sand (BE), white (BI).
- Filtration system - Attention: the filtration system doesn't include the electrical panel.
- Vacuum cleaner system.
- LED spot lights:
  - 1 Spot, standard placement until model 36.
  - 2 Spots, standard placement from model 37 until model 48.
  - 2 Spots, custom placement for sizes 49 and 510.
- Dolcevita composite wood top edge.
- Dolcevita safety ladder.
- This dolcevita version does not include panels.
- Wooden panels supports.



| Laghetto model | Description | Total dimensions (W x L x H) cm | Water dimensions (W x L x H) cm | Water volume Litres | Packaging Dimensions | Total gross weight Kg | Laghetto reference | Code |
|---|---|---|---|---|---|---|---|---|
| DV NAKED 24 | Swimming pool 2 x 4 m DOLCEVITA Naked with sand filter 10 m³ / h, 1 LED spotlight | 240x440 | 200x400x120 | 9,600 | 1 pallet: 100x130x240 | 357 | KITDVC24xS10N | **D24xS10Nz** |
| DV NAKED 25 | Swimming pool 2 x 5 m DOLCEVITA Naked with sand filter 10 m³ / h, 1 LED spotlight | 240x540 | 200x500x120 | 12,000 | 1 pallet: 100x130x240 | 386 | KITDVC25xS10N | **D25xS10Nz** |
| DV NAKED 35 | Swimming pool 3 x 5 m DOLCEVITA Naked with sand filter 10 m³ / h, 1 LED spotlight | 340x540 | 300x500x120 | 18,000 | 1 pallet: 100x130x240 | 432 | KITDVC35xS10N | **D35xS10Nz** |
| DV NAKED 36 | Swimming pool 3 x 6 m DOLCEVITA Naked with sand filter 10 m³ / h, 1 LED spotlight | 340x640 | 300x600x120 | 21,600 | 1 pallet: 100x130x240 | 565 | KITDVC36xS10N | **D36xS10Nz** |
| DV NAKED 37 | Swimming pool 3 x 7 m DOLCEVITA Naked with sand filter 10 m³ / h, 2 LED spotlights | 340x740 | 300x700x120 | 25,200 | 1 pallet: 100x130x240 | 575 | KITDVC37xS10N | **D37xS10Nz** |
| DV NAKED 48 | Swimming pool 4 x 8 m DOLCEVITA Naked with sand filter 10 m³ / h, 2 LED spotlights | 440x840 | 400x800x120 | 38,400 | 1 pallet: 100x130x240 | 645 | KITDVC48xS10N | **D48xS10Nz** |
| DV NAKED 49 | Swimming pool 4 x 9 m DOLCEVITA Naked with sand filter 15 m³ / h, 2 LED spotlights | 440x940 | 400x900x120 | 43,200 | 2 pallets: 100x130x240 100x120x130 | 720 | KITDVC49xS15N | **D49xS10Nz** |
| DV NAKED 510 | Swimming pool 5 x 10 m DOLCEVITA Naked with sand filter 15 m³ / h, 2 LED spotlights | 540x1040 | 500x1000x120 | 60,000 | 2 pallets: 100x130x240 100x120x130 | 860 | KITDVC510xS15N | **D510xS10Nz** |

**STRUCTURE AND POOL LINER**

Substitute **x** for the 2 following letters, according to the desired color combination:

**AZ** Light blue
**BE** Sand
**BI** White

**COMPOSITE WOOD TOP EDGE ELEMENT**

Substitute **z** for the following letters, according to the desired color combination:

**T** Tobacco
**G** Grey

# LAGHETTO ABOVE GROUND POOLS

## DOLCEVITA YACHT model

New

- Structure and pool liner.
- Filtration system - Attention: the filtration system doesn't include the electrical panel.
- Vacuum cleaner system.
- LED spot lights:
  - 1 spot standard placement until model 36.
  - 2 spots standard placement from model 37.
- Panels and top edge integrated in one piece panel made of wicker.
- Available in two colors: Grey or Laghetto white. White pool liner.
- Yacht ladder & platform + inox ladder.
- Plexiglass parapets.
- Boat shower.
- Slot for sound diffusion mounting system.

**POOL WARRANTY: 5 YEARS. ACCESSORIES WARRANTY: 2 YEARS.**

**OPTIONAL ACCESORIES:**

- Comfort steps.
- Nautical sky sun bed.
- 3 m canvas set, adding canvas 2 m.
- Swim jet system.
- Winter cover.
- Solar cover.
- Heat pump.





Yacht ladder & platform + inox ladder



Plexiglass parapets



Boat shower



Slot for sound diffusion mounting system



Comfort step



Nautical sky sun bed



3 m canvas set, adding canvas 2 m



Panels and top edge integrated

| Laghetto model | Description | Total dimensions (W x L x H) cm | Water dimensions (W x L x H) cm | Water volume Litres | Laghetto reference | Code |
|---|---|---|---|---|---|---|
| 24 | Swimming pool 2 x 4 m DOLCEVITA Yacht with sand filter 6 m³ / h, 1 LED spotlight | 240x635 | 200x400x120 | 9,600 | KITDVC24xS6Y | D24xS6Y |
| 25 | Swimming pool 2 x 5 m DOLCEVITA Yacht with sand filter 6 m³ / h, 1 LED spotlight | 240x735 | 200x500x120 | 12,000 | KITDVC25xS6Y | D25xS6Y |
| 254 | Swimming pool 2.5 x 4 m DOLCEVITA Yacht with sand filter 6 m³ / h, 1 LED spotlight | 290x635 | 250x400x120 | 12,000 | KITDVC254xS6Y | D254xS6Y |
| 255 | Swimming pool 2.5 x 5 m DOLCEVITA Yacht with sand filter 6 m³ / h, 1 LED spotlight | 290x735 | 250x500x120 | 15,000 | KITDVC255xS6Y | D255xS6Y |
| 256 | Swimming pool 2.5 x 6 m DOLCEVITA Yacht with sand filter 6 m³ / h, 1 LED spotlight | 290x835 | 250x600x120 | 18,000 | KITDVC256xS6Y | D256xS6Y |
| 35 | Swimming pool 3 x 5 m DOLCEVITA Yacht with sand filter 6 m³ / h, 1 LED spotlight | 340x735 | 300x500x120 | 18,000 | KITDVC35xS6Y | D35xS6Y |
| 35 | Swimming pool 3 x 5 m DOLCEVITA Yacht with sand filter 10 m³ / h, 1 LED spotlight | 340x735 | 300x500x120 | 18,000 | KITDVC35xS10Y | D35xS10Y |
| 36 | Swimming pool 3 x 6 m DOLCEVITA Yacht with sand filter 6 m³ / h, 1 LED spotlight | 340x835 | 300x600x120 | 21,600 | KITDVC36xS6Y | D36xS6Y |
| 36 | Swimming pool 3 x 6 m DOLCEVITA Yacht with sand filter 10 m³ / h, 1 LED spotlight | 340x835 | 300x600x120 | 21,600 | KITDVC36xS10Y | D36xS10Y |
| 37 | Swimming pool 3 x 7 m DOLCEVITA Yacht with sand filter 10 m³ / h, 2 LED spotlights | 340x935 | 300x700x120 | 25,200 | KITDVC37xS10Y | D37xS10Y |
| 38 | Swimming pool 3 x 8 m DOLCEVITA Yacht with sand filter 10 m³ / h, 2 LED spotlights | 340x1035 | 300x800x120 | 28,800 | KITDVC38xS10Y | D38xS10Y |

Substitute **X** for the 4 following letters, according to the desired color combination:

**BIGR** white liner and grey panels
**BIBI** white liner and white panels

## LAGHETTO ABOVE GROUND POOLS

### DOLCEVITA accessories - Covers

New

| Description | Total dimensions (W x L x H) cm | Laghetto reference | Code |
|---|---|---|---|
| Winter protection cover with elastic tensioners and DOLCEVITA 2x4 fixings | 320 x 520 | CODVC24 | **69644** |
| Winter protection cover with elastic tensioners and DOLCEVITA 2x5 fixings | 320 x 620 | CODVC25 | **69645** |
| Winter protection cover with elastic tensioners and DOLCEVITA 3x5 fixings | 420 x 620 | CODVC35 | **68001** |
| Winter protection cover with elastic tensioners and DOLCEVITA 3x6 fixings | 420 x 720 | CODVC36 | **69646** |
| Winter protection cover with elastic tensioners and DOLCEVITA 3x7 fixings | 420 x 820 | CODVC37 | **68002** |
| Winter protection cover with elastic tensioners and DOLCEVITA 4x8 fixings | 520 X 920 | CODVC48 | **68003** |
| Winter protection cover with elastic tensioners and DOLCEVITA 4x9 fixings | 520 X 1020 | CODVC49 | **69647** |
| Winter protection cover with elastic tensioners and DOLCEVITA 5x10 fixings | 620 X 1120 | CODVC510 | **69648** |
| Winter protection cover DOLCEVITA DIVA LTI 2.5x4 | 370 X 660 | CODVC254DG | **71111** |
| Winter protection cover DOLCEVITA DIVA LTI 2.5x5 | 370 X 770 | CODVC255DG | **71250** |
| Winter protection cover DOLCEVITA DIVA LTI 3x5 | 420 X 700 | CODVC35DG | **71251** |
| Winter protection cover DOLCEVITA DIVA LTI 3x6 | 420 X 800 | CODVC36DG | **71252** |
| Winter protection cover DOLCEVITA DIVA LTI 3x7 | 420 X 900 | CODVC37DG | **71249** |
| Winter protection cover DOLCEVITA DIVA LTI 4x8 | 520 X 1000 | CODVC48DG | **71253** |
| Winter protection cover DOLCEVITA DIVA LTI 4x9 | 520 X 1100 | CODVC49DG | **71254** |
| Floating isothermal cover DOLCEVITA 2x4 - All models | 200 X 400 | COGIDV24 | **71450** |
| Floating isothermal cover DOLCEVITA 2x5 - All models | 200 X 500 | COGIDV25 | **71449** |
| Floating isothermal cover DOLCEVITA 2.5x4 - All models | 250 X 400 | COGIDV254 | **71565** |
| Floating isothermal cover DOLCEVITA 2.5x5 - All models | 250 X 500 | COGIDV255 | **71566** |
| Floating isothermal cover DOLCEVITA 2.5x6 - All models | 250 X 600 | COGIDV256 | **71567** |
| Floating isothermal cover DOLCEVITA 3x5 - All models | 300 X 500 | COGIDV35 | **71451** |
| Floating isothermal cover DOLCEVITA 3x6 - All models | 300 X 600 | COGIDV36 | **71452** |
| Floating isothermal cover DOLCEVITA 3x7 - All models | 300 X 700 | COGIDV37 | **71453** |
| Floating isothermal cover DOLCEVITA 3x8 - All models | 300 X 800 | COGIDV38 | **71568** |
| White comfort step for YACHT | - | DVYGRACOMB | **71410** |
| Ardesia color comfort step for YACHT | - | DVYGRACOMG | **71411** |
| Nautical sky sun bed for YACHT | - | DVYLPSKYB | **71412** |
| 4 m canvas set and stainless steel accesories for YACHT | - | DVYVELA3 | **71413** |
| 2 m canvas set for YACHT | - | DVYVELA2 | **71564** |

# LAGHETTO ABOVE GROUND POOLS

## DOLCEVITA accessories - countercurrent swim kit

New

| Description | Laghetto reference | Code |
|---|---|---|
| Countercurrent swim kit DOLCEVITA YACHT + LTI 2 meters | DVKITNCC020 | **DVKITNCC020** |
| Countercurrent swim kit DOLCEVITA YACHT + LTI 3 meters | DVKITNCC030 | **DVKITNCC030** |
| Countercurrent swim kit DOLCEVITA YACHT + LTI 4 meters | DVKITNCC040 | **DVKITNCC040** |

### BASEMENT SIZES (NOT FOR DOLCEVITA DIVA LTI)

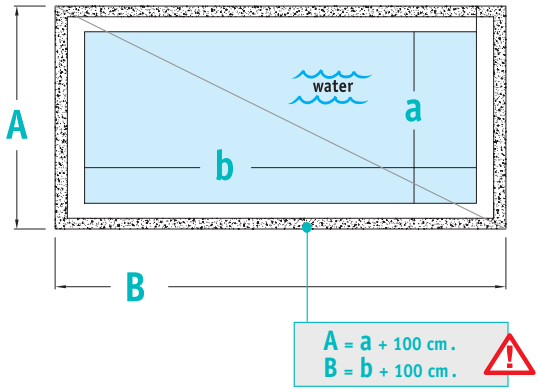


### BASEMENT FEATURES REINFORCED CONCRETE

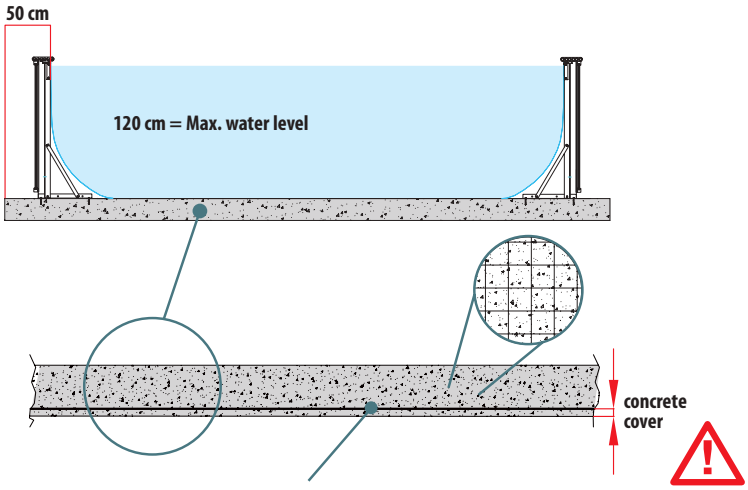


- Check with your engineer which are the optimal requirements for your installation.
- Check the basement is really rectangular with the same diagonals.
- The basement must support a load 1300 kg per square meter given from water weight.
- Check the basement is achievable in case of unstable ground by geological expertise.
- The basement surface must be as smoothed as plaster.
- Tolerance gradient of the perimeter of slab = ± 1 cm.

### BASEMENT SIZES FOR DOLCEVITA DIVA LTI

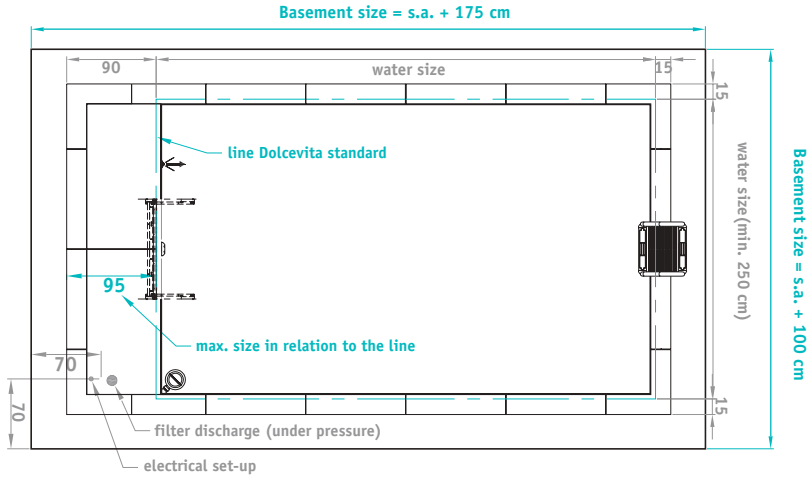

## LAGHETTO ABOVE GROUND POOLS

Steel basement structure for DOLCEVITA aboveground

| Description | Laghetto reference | Code |
|---|---|---|
| STEEL BASEMENT STRUCTURE FOR A NON-SLAB ASSEMBLY DOLCEVITA 2x4 | DVC24KITTB | **69624** |
| STEEL BASEMENT STRUCTURE FOR A NON-SLAB ASSEMBLY DOLCEVITA 2x5 | DVC25KITTB | **69625** |
| STEEL BASEMENT STRUCTURE FOR A NON-SLAB ASSEMBLY DOLCEVITA 2.5x4 | DVC254KITTBS | **71282** |
| STEEL BASEMENT STRUCTURE FOR A NON-SLAB ASSEMBLY DOLCEVITA 2.5x5 | DVC255KITTBS | **71323** |
| STEEL BASEMENT STRUCTURE FOR A NON-SLAB ASSEMBLY DOLCEVITA 3x5 | DVC35KITTB | **69626** |
| STEEL BASEMENT STRUCTURE FOR A NON-SLAB ASSEMBLY DOLCEVITA 3x6 | DVC36KITTB | **69627** |
| STEEL BASEMENT STRUCTURE FOR A NON-SLAB ASSEMBLY DOLCEVITA 3x7 | DVC37KITTB | **69628** |
| STEEL BASEMENT STRUCTURE FOR A NON-SLAB ASSEMBLY DOLCEVITA 4x8 | DVC48KITTB | **69629** |
| STEEL BASEMENT STRUCTURE FOR A NON-SLAB ASSEMBLY DOLCEVITA 4x9 | DVC49KITTB | **69630** |
| STEEL BASEMENT STRUCTURE FOR A NON-SLAB ASSEMBLY DOLCEVITA 5x10 | DVC510KITTB | **69631** |

## BASEMENT FOR DIRECT ASSEMBLY ON THE GROUND

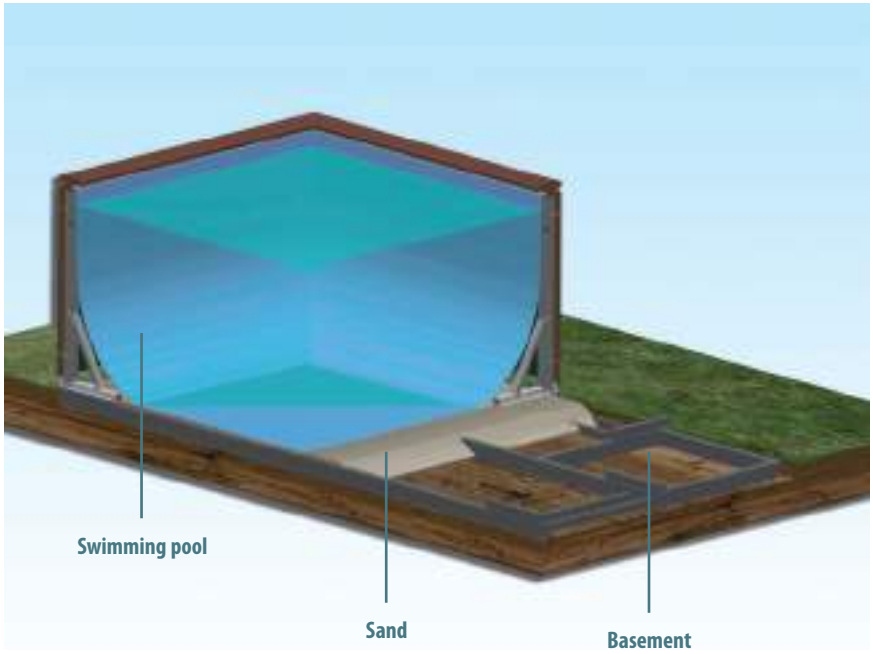


- Zero impact installation.
- For installation where no concrete basement can be made.
- Easy to move and assemble.
- Fully removable.

## LAGHETTO ABOVE GROUND POOLS

### Stainless steel components to stabilize the structure of the pool

New

- Stainless steel components to stabilize the structure of the pool.
- To assemble only when the pool is empty.

| Description | Laghetto reference | Code |
|---|---|---|
| Kit for DOLCEVITA 2x4 | DV24KITAL | **69616** |
| Kit for DOLCEVITA 2x5 | DV25KITAL | **69617** |
| Kit for DOLCEVITA 2.5x4 | DV254KITAL | **71281** |
| Kit for DOLCEVITA 3x4 | DV34KITAL | **71123** |
| Kit for DOLCEVITA 2.5x5 | DV255KITAL | **71324** |
| Kit for DOLCEVITA 3x5 | DV35KITAL | **69619** |
| Kit for DOLCEVITA 3x6 | DV36KITAL | **69618** |
| Kit for DOLCEVITA 3x7 | DV37KITAL | **69620** |
| Kit for DOLCEVITA 4x8 | DV48KITAL | **69621** |
| Kit for DOLCEVITA 4x9 | DV49KITAL | **69622** |
| Kit for DOLCEVITA 5x10 | DV510KITAL | **69623** |

## FIXING AND ALIGMENT KIT

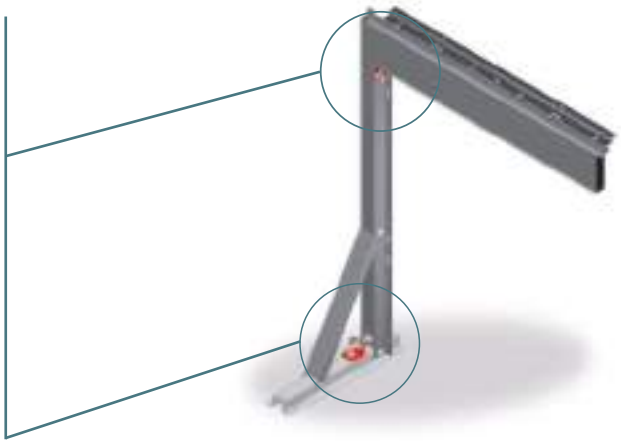

**THE KIT IS AN AISI 304 STAINLESS STEEL LOCKING SYSTEM CONSISTING OF FASTENERS THAT ALLOW TO PREVENT NORMAL STRUCTURAL BEDDINGS (MISALIGNMENT) OF DOLCEVITA DURING THE FILLING PHASE.**

- With the kit you can't align the pool once filled.
- It's compatible without any modification only with Dolcevita structures from April 2014.
- You can't add the kit to assembled pool, to fit it you must dismantle the pool completely.
- If the Dolcevita structure has been purchased before April 2014 some modifications to the structure are necessary.

## LAGHETTO ABOVE GROUND POOLS

### POP! model

New

**POP!**

is the range of above ground pools
with which Laghetto celebrate
its first 40 years
in the swimming pool industry.

It's the result of four decades of patents
and innovative projects and represent
the highest expression of quality
on the above ground pools market.

The Pop range is available both
in 100 and 120 cm water depth
in a wide choice of soft, cool and fashion colors
you can set in a pleasant and
unconventional way in your space or garden.

pop!

a dip into the colors

## STANDARD EQUIPMENT

- LED lights.
- Safety ladder.
- Exclusive Laghetto water filtration and treatment system. Choice of AstralPool sand filters.
- Special foot blocks for ground assembly.







## LAGHETTO ABOVE GROUND POOLS

### POP! model

POP!




*Pool liner*



*Patented Laghetto skimmer*



*AstralPool sand filters*



*Laghetto pipes*



*Above-ground pool foot support*



*Safety ladder*



- LV - BUTTERFLY LILAC
- TR - TURQUOISE BLUE
- ML - CATERPILLAR GREEN
- CR - SEA SAND
- LT - STAR WHITE

## LAGHETTO ABOVE GROUND POOLS

### POP! model

New

- Pool kits with 1 / 2 skimmers, sand filter, manual pool cleaner, ladder, 1 / 2 small LED spotlights and support footblocks.



| Laghetto model | Description | Total dimensions (W x L x H) cm | Water dimensions (W x L x H) cm | Water volume Litres | Packaging dimensions | Total gross weight Kg | Laghetto reference | Color | Code |
|---|---|---|---|---|---|---|---|---|---|
| POP 120 – 24 | Pool kit filter 6 m³ / h<br>1 skimmer<br>1 spotlight LED | 384x504 | 280x400x120 | 13500 | 110 x 140 x 125 | 184 | KITPOP24MLS6 | caterpillar green | **69366** |
| | | | | | | | KITPOP24CRS6 | sea sand | **69369** |
| | | | | | | | KITPOP24LVS6 | butterfly lilac | **69376** |
| | | | | | | | KITPOP24TRS6 | turquoise blue | **69380** |
| POP 120 – 25 | Pool kit filter 6 m³ / h<br>1 skimmer<br>1 spotlight LED | 384x634 | 280x530x120 | 17000 | 110 x 140 x 130 | 205 | KITPOP25MLS6 | caterpillar green | **69365** |
| | | | | | | | KITPOP25CRS6 | sea sand | **69370** |
| | | | | | | | KITPOP25LVS6 | butterfly lilac | **69379** |
| | | | | | | | KITPOP25TRS6 | turquoise blue | **69381** |
| POP 120 – 26 | Pool kit filter 6 m³ / h<br>1 skimmer<br>1 spotlight LED | 384x764 | 280x660x120 | 21500 | 110 x 140 x 160 | 224 | KITPOP26CRS6 | sea sand | **69371** |
| | | | | | | | KITPOP26LVS6 | butterfly lilac | **69378** |
| | | | | | | | KITPOP26TRS6 | turquoise blue | **69382** |
| POP 120 – 27 | Pool kit filter 10 m³ / h<br>1 skimmer - 1 spotlight LED | 384x884 | 280x780x120 | 26200 | 100 x 140 x 160 | 258 | KITPOP27MLS | caterpillar green | **70481** |
| | | | | | | | KITPOP27CRS | sea sand | **70857** |
| POP 120 – 45 | Pool kit filter 10 m³ / h<br>1 skimmer - 1 spotlight LED | 504x634 | 400x530x120 | 25440 | 100 x 140 x 160 | 240 | KITPOP45CRS | sea sand | **70381** |
| POP 120 – 46 | Pool kit filter 10 m³ / h<br>1 skimmer - 1 spotlight LED | 504x764 | 400x660x120 | 30500 | 110 x 140 x 160 | 262 | KITPOP46MLS | caterpillar green | **69367** |
| POP 120 – 47 | Pool kit filter 10 m³ / h<br>1 skimmer - 1 spotlight LED | 504x884 | 400x780x120 | 36000 | 110 x 140 x 170 | 287 | KITPOP47MLS | caterpillar green | **69368** |
| | | | | | | | KITPOP47CRS | sea sand | **69373** |
| POP 120 – 49 | Pool kit filter 15 m³ / h<br>2 skimmers - 2 spotlights LED | 504x1004 | 400x900x120 | 43200 | 100 x 140 x 180 | 335 | KITPOP49xGS | - | - |

# LAGHETTO ABOVE GROUND POOLS

## POP! model

New

POP!

- Pool kits with 1 skimmer, sand filter, manual pool cleaner, ladder, small LED spotlight and support feet.

| Laghetto model | Description | Total dimensions (W x L x H) cm | Water dimensions (W x L x H) cm | Water volume Litres | Packaging dimensions | Total gross weight Kg | Laghetto reference | Color | Code |
|---|---|---|---|---|---|---|---|---|---|
| POP 120 – 510 | Pool kit filter 15 m³ / h, 2 skimmers, 2 spotlights LED | 634 x 1129 | 530 x 1025 x 120 | 65,200 | 120x140x180 | 402 | KITPOP510xGS | - | - |
| POP 120 - 511 | Pool kit filter 15 m³ / h, 2 skimmers, 2 spotlights LED | 634 x 1254 | 530 x 1150 x 120 | 73,140 | 120x140x180 | 420 | KITPOP511xGS | - | - |
| POP 120 - 612 | Pool kit filter 15 m³ / h, 2 skimmers, 2 spotlights LED | 764 x 1374 | 660 x 1270 x 120 | 100,600 | 120x140x180 | 480 | KITPOP612xGS | - | - |
| POP 100 - 0 | Pool kit filter 6 m³ / h, 1 skimmer, 1 spotlight LED | 364 x 484 | 280 x 400 x 100 | 10,500 | 90x140x120 | 164 | KITPOP0xS6 | - | - |
| POP 100 - 1 | Pool kit filter 6 m³ / h, 1 skimmer, 1 spotlight LED | 364 x 614 | 280 x 530 x 100 | 14,000 | 90x140x120 | 170 | KITPOP1xS6 | - | - |
| POP 100 - 2 | Pool kit filter 6 m³ / h, 1 skimmer, 1 spotlight LED | 364 x 744 | 280 x 660 x 100 | 17,500 | 90x140x120 | 176 | KITPOP2xS6 | - | - |

Substitute **X** for the following 2 letters, according to the desired color combination:

**ML** Caterpillar green
**CR** Sea sand
**LV** Butterfly lilac
**TR** Turquoise blue
**LT** Star white

## POP! accessories - Covers

New

| Description | Code |
|---|---|
| Isothermal bubble cover POP24 | **LACS24** |
| Winter cover grey POP24 | **LACH24G** |
| Winter cover beige POP24 | **LACH24BE** |
| Winter cover blue POP24 | **LACH24BL** |
| Isothermal bubble cover POP25 | **LACS25** |
| Winter cover grey POP25 | **LACH25G** |
| Winter cover beige POP25 | **LACH25BE** |
| Winter cover blue POP25 | **LACH25BL** |
| Isothermal bubble cover POP26 | **LACS26** |
| Winter cover grey POP26 | **LACH26G** |
| Winter cover beige POP26 | **LACH26BE** |
| Winter cover blue POP26 | **LACH26BL** |

## LAGHETTO ABOVE GROUND POOLS

### POP! accessories - Covers



| Description | Code |
|---|---|
| Isothermal bubble cover POP27 | LACS27 |
| Winter cover grey POP27 | LACH27G |
| Winter cover beige POP27 | LACH27BE |
| Winter cover blue POP27 | LACH27BL |
| Isothermal bubble cover POP45 | LACS45 |
| Winter cover grey POP45 | LACH45G |
| Winter cover beige POP45 | LACH45BE |
| Winter cover blue POP45 | LACH45BL |
| Isothermal bubble cover POP46 | LACS46 |
| Winter cover grey POP46 | LACH46G |
| Winter cover beige POP46 | LACH46BE |
| Winter cover blue POP46 | LACH46BL |
| Isothermal bubble cover POP47 | LACS47 |
| Winter cover grey POP47 | LACH47G |
| Winter cover beige POP47 | LACH47BE |
| Winter cover blue POP47 | LACH47BL |
| Isothermal bubble cover POP49 | LACS49 |
| Winter cover grey POP49 | LACH49G |
| Winter cover beige POP49 | LACH49BE |
| Winter cover blue POP49 | LACH49BL |
| Isothermal bubble cover POP510 | LACS510 |
| Winter cover grey POP510 | LACH510G |
| Winter cover beige POP510 | LACH510BE |
| Winter cover blue POP510 | LACH510BL |
| Isothermal bubble cover POP511 | LACS511 |
| Winter cover grey POP511 | LACH511G |
| Winter cover beige POP511 | LACH511BE |
| Winter cover blue POP511 | LACH511BL |
| Isothermal bubble cover POP612 | LACS612 |
| Winter cover grey POP612 | LACH612G |
| Winter cover beige POP612 | LACH612BE |
| Winter cover blue POP612 | LACH612BL |

## INOXPOOL

### Inoxpool

New

Pool manufactured in one piece in satin-finish, **AISI-316L stainless steel**.

With a 2 mm thickness wall and with skimmers. It includes a non-slip bottom.

- Hydraulic pre-installation included.
- Ready to connect.
- Easy installation, without building work.
- Total security and quality.

2 Differents models:

### OPTIMAL

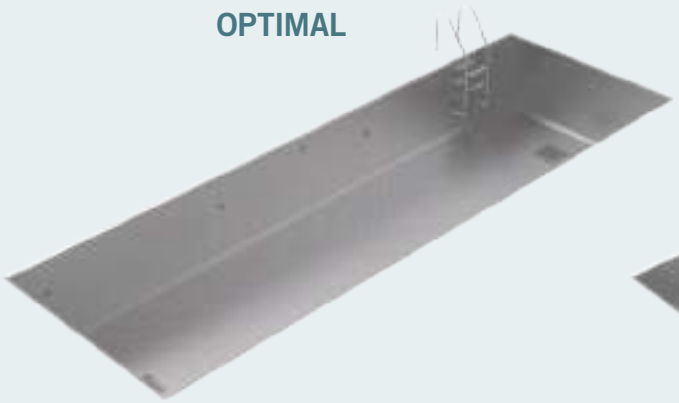

Optimal model is a residential pool made in one piece in satin-finish stainless steel, AISI-316L including skimmers. It includes a ladder.

### WELLNESS



Wellness model is a residential pool made in one piece in satin-finish stainless steel, AISI-316L including skimmers. Including:

- Steps
- Hydromassage bench
- Hydromassage cascade
- Hydromassage water jet
- Cover



## INOXPOOL

### Model comparison

New

| |  | |  | |  | |  | |
|---|---|---|---|---|---|---|---|---|
| | 5 x 3 x 1.2 m | | 7 x 3 x 1.2 m | | 9 x 3 x 1.2 m | | 12 x 3 x 1.2 m | |
| **MODELS** | **Optimal** | **Wellness** | **Optimal** | **Wellness** | **Optimal** | **Wellness** | **Optimal** | **Wellness** |
| **Code** | **71499** | **71500** | **71504** | **71505** | **71511** | **71512** | **71518** | **71519** |
| **General specifications** | | | | | | | | |
| Internal dimensions (m) | 5 x 2.85 x 1.2 | | 7 x 2.85 x 1.2 | | 8.84 x 2.85 x 1.2 | | 11.84 x 2.85 x 1.2 | |
| External dimensions (m) | 5.7 X 3.6 X 1.3 | | 7.7 X 3.6 X 1.3 | | 9.6 X 3.6 X 1.3 | | 12.6 X 3.6 X 1.3 | |
| Water capacity ($m^3$) | 18 | | 24 | | 31 | | 41 | |
| Empty weight / Full weight (kg) | 2100 / 20100 | 2300 / 20300 | 2650 / 26650 | 2850 / 26850 | 3250 / 34250 | 3350 / 34350 | 4050 / 45050 | 4200 / 45200 |
| **Characteristics** | | | | | | | | |
| Skimmers | 2 | 2 | 2 | 2 | 3 | 3 | 4 | 4 |
| Overflow suction | - | - | - | - | - | - | - | - |
| Return inlet | 3 | 4 | 3 | 4 | 4 | 5 | 5 | 6 |
| Bottom cleaner nozzle | 1 | 1 | 1 | 1 | 1 | 1 | 2 | 2 |
| Main drains | 2 | 2 | 2 | 2 | 2 | 2 | 2 | 2 |
| Projectors | 2 | 2 | 2 | 2 | 2 | 2 | 3 | 3 |
| **Accessories** | | | | | | | | |
| Ladder (3 steps) | • | - | • | - | • | - | • | - |
| Steps | - | • | - | • | - | • | - | • |
| Hydromassage bench | - | • | - | • | - | • | - | • |
| Hydromassage cascade | - | • | - | • | - | • | - | • |
| Hydromassage water jet | - | • | - | • | - | • | - | • |
| Hydromassage beds | - | - | - | - | - | - | - | - |
| Countercurrent | - | - | - | - | - | - | - | - |
| Cover | - | • | - | • | - | • | - | • |
| **Recommended equipment** | | | | | | | | |
| Hydraulic button and timer | - | **45218 + 35761** | - | **45218 + 35761** | - | **45218 + 35761** | - | **45218 + 35761** |
| Blower pump for hydro beds | - | - | - | - | - | - | - | - |
| Blower pump for hydro bank | - | **35388** | - | **35388** | - | **35388** | - | **35388** |





# SPAS AND SAUNAS


362 • Our range of spas
363 • Colour chart for spas
363 • Coding structure for private spas with cabinet
363 • Types of coatings
364 • Optional equipment
365 • Standard equipment
368 • Spa range - Ocean Dreams range
371 • Spa range - Essential range
373 • Spa range - Swimspa range
375 • In-ground residential spas
377 • Compact filtration for spas
378 • Complements for spas
379 • Liner accessories
383 • Pool Jet accessories
384 • Accessories for minispas
385 • Electrical accessories for spas / mini spas
386 • Air blowers
388 • Saunas
391 • Accessories - Saunas

## OUR RANGE OF SPAS



### Ocean Dreams range

A range of spas intended for the most demanding users. Ergonomic spas, with numerous features and configuration settings.



### Swimspa range

Swimspas are small residential pools.

Versatile, powerful and compact. A health and wellness centre available all year round.



### Essential range

The Essential range seeks to strike a balance between functionality, performance and cost.



### Commercial range

Spas designed for commercial spaces, wellness centres, hotels... A wide range of options and finishes that cover all needs. Spas with both an acrylic and mosaic tile finish.

*We reserve the right to change, wholly or partially, the features of our products and the contents of this document, without prior notice*

## COLOUR CHART FOR SPAS


N° 44 WHITE


N° 46 BLUE MARBLE


N° 59 STERLING


N° 64 PEARL SHADOW

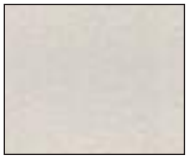
N° 72 PEARL CAMEO


N° 27 SILVER


N° 18 SAND

## CODING STRUCTURE FOR PRIVATE SPAS WITH CABINET

The coding structure for the wood cabinet spas is made up of 10 digits. The first 5 digits refer to the Spa model and the following ones indicate the range, coating and the colour of the accessories as it is also necessary to specify the colour.

This coding system will be structured in the following way:

| X X X X X | X | X | X | XX | CL | XX |
|---|---|---|---|---|---|---|
| Spa Model | Range | Coating type | Accessory colour | Accessories | Variation | Colour |

| | |
|---|---|
| Position 1 to 5: Standard code 5 figure code | |
| Position 6: Product range definition | |
| S | Standard |
| L | Luxe |
| A | Plus |
| Position 7: Coating type definition | |
| 1 | Coastal Grey portable spa with cabinet |
| 4 | Portable spa without cabinet |
| E | In-ground spa, compact kit version |
| B | Urban Grey Cabinet |
| K | Graphite Cabinet |
| P | Graphite cabinet with screw |
| R | Thunder Cabin |
| Q | Thunder cabinet with screw |
| T | Creek Cabinet |
| W | Butterfly Cabinet |
| Position 8: Accessories colour definition | |
| 3 | Stainless steel |
| Positions 9 to 10: Options configuration definition | |
| 00 | Std + Cover |
| 05 | Std + Cover + ECOSpa |
| 20 | Std + Cover + LumiPlus |
| 21 | Std + Cover + ECOSpa + LumiPlus |
| 23 | Std + Cover + LumiPlus + Audio |
| 32 | Std + Cover + LumiPlus + Stainless steel bar on cabinet |
| 27 | Std + Cover + LumiPlus + ECOSpa + Stainless steel bar on cabinet |
| 33 | Std + Cover + LumiPlus + Audio + Stainless steel bar on cabinet |
| 34 | Std + Cover + LumiPlus + ECOSpa + Audio |
| 35 | Std + Cover + LumiPlus + ECOSpa + Audio + Stainless steel bar on cabinet |
| 56 | Std + Cover + LumiPlus + EcoSpa + Audio + Stainless Steel Bar on Cabinet + Wi-Fi Touch Panel |
| 55 | Std + Cover + LumiPlus + EcoSpa + Nordic Insulation + Audio + Stainless Steel Bar on Cabinet + Wi-Fi Touch Panel |
| 0J | Std + Cover + LumiPlus + EcoSpa + Stainless Steel Bar on Cabinet + Blue Connect Plus |

## TYPES OF COATINGS

**Graphite**



**Coastal Grey**



**While stocks last**

**Thunder**



**Creek**



**Butterfly**



**Urban Grey**



# OPTIONAL EQUIPMENT

## EcoSpa thermal insulation



EcoSpa is one of the best thermal insulation systems currently available in the market. This comprehensive system manages to minimize heat loss by convection and conduction, and to use the heat generated by the heater and pumps found in the spa. The walls have an exclusive 30 mm thick layer of polyurethane foam insulation. A strong ABS substructure of insulating plastic at the bottom of the spa ensures total water tightness. Finally, an isothermal cover of between 100 and 130 cm thick gives extra insulation.

All of these features reduce heat loss to a minimum and maximize the recovery of the heat generated by the spa's components, thus reducing energy consumption by up to 67%. With ECOSpa, consumption to maintain the water at 38º with a room temperature of 20º is 6.48 kW/h, while without this system it is 19.52 kW/h.

EcoSpa option

## Nordic Insulation System



NORDIC INSULATION SYSTEM is designed for cold environments and can enhance your spa's energy efficiency.

The Nordic insulation system comprises a 10mm insulating material composed of five layers. This insulation layer is positioned in the sides and curves of the spa to create an insulating air chamber inside. The five layers are made from:

- Aluminium.
- RC9 bubble + low-density polyethylene (double layer).
- FONPEX non-crosslinked polyethylene foam (20 kg/m$^3$).
- RC9 bubble + low-density polyethylene (double layer).
- Aluminium.

This system is an improvement over the EcoSpa class as it minimizes temperature leak zones and optimizes spa energy performance in extreme temperature situations.

Difference between the EcoSpa and Nordic insulation systems in thermal imaging:

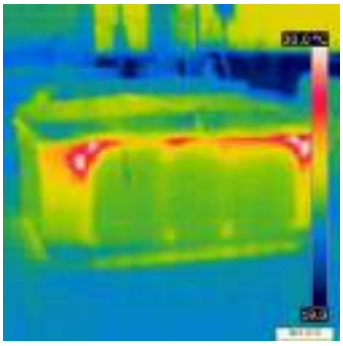

**Spa with EcoSpa**

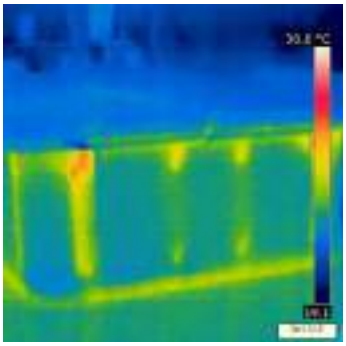

**Spa with Nordic insulation system**

## Wi-Fi Touch panel



The Balboa Wi-Fi control panel is an app for your smart device (Android™ or iPhone®) which lets you access your spa over the internet from anywhere, home or away. All you need is a 3G, 4G or Wi-Fi connection to access and control your spa over your mobile phone or tablet.

By using the Wi-Fi control panel, you can make sure that your spa is ready for use every time you want to take a dip. Instead of having to go outside and fiddle around with the buttons on the control panel, this app will enable you to change your spa's settings from your mobile phone or tablet.
The app has a full control interface so you can set the water temperature, run the massage pumps and even control the filtration cycle.

# OPTIONAL EQUIPMENT

## LumiPlus + Bluetooth Audio System, only available for fully skirted portable spas



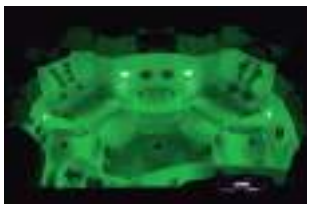



Natural treatments are one of the main sources of health provided by a spa. Chromotherapy and music therapy are the perfect accompaniment to any hot tub.

Chromotherapy is the natural technique based on the use of colours to help your mind and body find their natural physical, mental and emotional balance. By choosing the LumiPlus option, 5 LED spotlights are added to your spa so that you can enjoy a spectacular ambient lighting system. Thanks to the 5 LED spotlights, you can choose the colours that match your mood at any given time.







The Bluetooth Audio System enables music to be played from any mobile phone, MP4 Player or audio equipment via a simple Bluetooth connection, without the need for any cables and with coverage of up to 7 metres. Now you can truly make your spa a centre of relaxation, health and beauty.

The Advance range has a 4.1 Bluetooth Audio system made up of 4 external loudspeakers, an internal subwoofer and a Bluetooth receiver.

The Essential range has a 2.1 Bluetooth Audio system made up of 2 external loudspeakers, an internal subwoofer and a Bluetooth receiver.

LumiPlus + Bluetooth Audio System option

## Blue Connect Plus



**Enjoy your Hot Tub with peace of mind**

Blue Connect analyzes the quality of the water and shows you the needed chemicals for the maintenance of your Hot Tub.

**Sit back and relax. Thanks to Blue Connect, your Hot Tub is at your fingertips**

Monitor your Hot Tub wherever you are with the connected Hot Tub water analyzer and the free Blue Connect app.

# STANDARD EQUIPMENT

## Balboa Electronics, standard in all spas

AstralPool only uses new generation control systems made by BALBOA, a leading supplier of electronic controls for hydromassage tubs and spas.

With the continual improvement made to its designs and its innovative solutions to increase the quality and reliability of its systems, the Balboa EL/GL and VS/GS family of control systems has been designed using patented M7 technology for temperature and flow sensors, and its new universal control system increases the flexibility of its functions and reduces installation and configuration problems.

These characteristics make the controls even more reliable, easier to install and easier to use.



# STANDARD EQUIPMENT

## Ozone disinfection system



Ozone is "active oxygen", a special element found in nature. Ozone is a powerful oxidising agent and, unlike traditional chemical products, it does not leave toxic waste behind, and when it has done its work it simply turns back into oxygen. Moreover, tests have proved that it effectively kills bacteria and mould.

AstralPool manufactures spas that give high quality performance and supplies an integrated ozone generator as a standard feature in all of its portable spas. The ozonator has numerous benefits: the water in spas will be safer, cleaner, purer, free of chloramines, trihalomethane and other chlorine by-products, with a high redox potential. Greater water clarity and algae control are obtained using lower concentrations of chemical substances.

A spa with water purified with ozone is one of the most pleasant relaxation and hydrotherapy experiences.

## Ultraviolet disinfection system

Spas equipped with the ultraviolet system are disinfected using UV technology. Thanks to a UV lamp, all bacteria in the water are destroyed. The advantages of the ultraviolet system can be summarized as follows:

- It ensures water remains fresh, clean and clear.
- It is an efficient and safe way of disinfecting the water.
- Its UV-C light breaks down combined chlorine.
- It protects the water from germs.
- It keeps the formation of mould, bacteria and algae under control.
- It can reduce the amount of chlorine and other chemical products used by up to 80%.
- It prevents the smell of chlorine and irritation to the skin and eyes (bloodshot eyes).
- It is more environmentally friendly than traditional methods.

Using this system, all bacteria, mould and algae will automatically be removed from your spa, and it will be protected from germs without the need for any kind of maintenance.

## Aroma, only available for spas with a blower



Aromatherapy offers the therapeutic properties of pure aromas for a natural treatment and makes a significant contribution in helping to restore your natural state of balance and harmony.

Nobody is indifferent to smells. They bring to mind emotions, memories and ideas. Increase the relaxing effect of your tub by adding a fragrance!

# SPA RANGE

## Model comparison



| | OCEAN DREAMS RANGE | | | | | | ESSENTIAL RANGE | | | | SWIMSPA RANGE | | | |
|---|---|---|---|---|---|---|---|---|---|---|---|---|---|---|
| **MODELS** | **Pure** | **New'Art** | **Evolution** | **Atlantida 70** | **Pacific 70** | **Ocean 70** | **Select** | **Emotion** | **Equilibre** | **Corner** | **Swimspa Dual** | **Swimspa Mediterranea** | **Swimspa Creta** | **Swimspa Compact** |
| **Code** | **68450** | **68449** | **32474** | **62399** | **69130** | **69863** | **62398** | **58604** | **58603** | **43930** | **69126** | **64414** | **67203** | **69128** |
| **General Information** | | | | | | | | | | | | | | |
| Size cm (± 2 cm) | 220 x 220 x 78 | 220 x 220 x 78 | 233 x 233 x 91 | 216 x 216 x 90 | 216 x 216 x 90 | 216 x 167 x 74 | 216 x 198 x 90 | 216 x 198 x 90 | 216 x 148 x 90 | 166 x 200 x 71 | 575 x 230 x 138 | 500 x 230 x 138 | 400 x 230 x 138 | 400 x 230 x 138 |
| Places (Seats/Loungers) | 4 (4 / -) | 5 (3 / 2) | 5 (3 / 2) | 5 (3 / 2) | 6 (5 / 1) | 3 (1 / 2) | 6 (5 / 1) | 5 (3 / 2) | 3 (2 / 1) | 2 (1 / 1) | 1 Vertical + 3 (2 / 1) | 3 (2 / 1) | 3 (2 / 1) | 1 Vertical |
| Graphite Cabinet | - | - | • | • | • | • | • | • | • | - | - | - | - | - |
| Coastal Grey cabinet | - | - | - | - | - | - | - | - | - | YES | YES | YES | YES | YES |
| Thunder Cabin | - | - | Optional | Optional | Optional | Optional | Optional | Optional | Optional | - | - | - | - | - |
| Creek Cabinet | - | - | Optional | Optional | Optional | Optional | - | - | - | - | - | - | - | - |
| Butterfly Cabinet | - | - | Optional | Optional | Optional | Optional | - | - | - | - | - | - | - | - |
| Solid surface Cabinet | • | • | - | - | - | - | - | - | - | - | - | - | - | - |
| Without cabinet | - | - | Optional | Optional | Optional | Optional | Optional | Optional | Optional | Optional | Optional | Optional | Optional | Optional |
| **Options** | | | | | | | | | | | | | | |
| EcoSpa thermal insulation | Optional | Optional | Optional | Optional | Optional | Optional | Optional | Optional | Optional | Optional | Optional | Optional | Optional | Optional |
| Nordic Insulation | Optional | Optional | Optional | Optional | Optional | Optional | - | - | - | - | - | - | - | - |
| Bluetooth Audio system | Optional (Sist. 4.1) | Optional (Sist. 4.1) | Optional (Sist. 4.1) | Optional (Sist. 4.1) | Optional (Sist. 4.1) | Optional (Sist. 4.1) | Optional (Sist. 2.1) | - | - | - | Optional (Sist. 4.1) | Optional (Sist. 4.1) | Optional (Sist. 4.1) | Optional (Sist. 4.1) |
| LumiPlus LED lighting system | • | • | • | • | • | • | Optional | - | - | - | • | • | • | • |
| Stainless steel jets | • | • | • | • | • | • | • | • | • | • | • | • | • | • |
| Stainless steel bar | - | - | • | • | • | • | - | - | - | - | • | • | • | • |
| Wi-Fi Touch Panel | Optional | Optional | Optional | Optional | Optional | Optional | - | - | - | - | - | - | - | - |
| Blue Connect Plus | Optional | Optional | Optional | Optional | Optional | Optional | - | - | - | - | Optional | Optional | Optional | Optional |
| **Configurations** | | | | | | | | | | | | | | |
| No of jets | 27 | 28 | 54 | 52 | 50 | 42 | 52 | 34 | 24 | 22 | 15 + 5 Turbo Jets + 37 Jets | 25 + 5 Turbo jets | 48 + 4 Turbo jets | 18 + 5 Turbo jets |
| No. of blower nozzles | 12 | 14 | 16 | 14 | 10 | - | - | - | - | 7 | - | - | - | - |
| Waterfalls | - | - | 1 | 2 | 2 | - | 2 | - | - | 2 | - | 1 | - | - |
| Headrests | 2 | 3 | 3 | 3 | 3 | 2 | 3 | 2 | 1 | 2 | 3 | 1 | 3 | - |
| Digital control panel | 1 | 1 | 2 | 1 | 1 | 1 | 1 | 1 | 1 | 1 | 3 | 2 | 2 | 2 |
| Oxynator | - | - | - | - | - | - | • | • | • | • | - | - | - | - |
| Ultraviolet | • | • | • | • | • | • | - | - | - | - | Yes | Yes | Yes | Yes |
| Aromatherapy | • | • | • | • | • | - | - | - | - | • | - | - | - | - |
| Chromotherapy | 5 LEDs + light Tab | 5 LEDs + light Tab | 5 LEDs + light Tab | 5 LEDs + light Tab | 5 LEDs + light Tab | 5 LEDs + light Tab | 1 LED spot-light | 1 LED spot-light | 1 LED spot-light | 1 LED spot-light | 5 LEDs + light Tab | 5 LEDs + light Tab | 5 LEDs + light Tab | 5 LEDs + light Tab |
| **Structure and Cover** | | | | | | | | | | | | | | |
| High-resistance metal structure | • | • | • | • | • | • | • | • | • | • | • | • | • | • |
| Insulating ABS base | • | • | • | • | • | • | • | • | • | • | • | • | • | • |
| Isothermal cover | • | • | • | • | • | • | • | • | • | • | • | • | • | • |
| **Technical equipment** | | | | | | | | | | | | | | |
| Filter pump | 250 W | 250 W | 250 W | 250 W | 250 W | 250 W | 250 W | - | - | 250 W | 250 W + 250 W | 250 W | 250 W | 250 W |
| Massage pump | 1.8 kW / 2.5 HP | 1.8 kW / 2.5 HP | 2 x 2.2 kW / 3 HP | 2 x 1.8 kW / 2.5 HP | 2 x 1.8 kW / 2.5 HP | 2.2 kW / 3 HP | 2 x 1.8 kW / 2.5 HP | 1 x 2.2 kW / 3 HP. 2 Vel. | 1 x 2.2 kW / 3 HP. 2 Vel. | 1 x 1.8 kW / 2.5 HP | 3 x 2.2 kW / 3 HP + 2.2 kW / 3 HP | 3 x 2.2 kW / 3 HP | 3 x 2.2 kW / 3 HP | 3 x 2.2 kW / 3 HP |
| Blower pump | 1150 W | 1150 W | 400 W | 400 W | 400 W | - | - | - | - | 400 W | - | - | - | - |
| Electric heater | 3 kW | 3 kW | 3 kW | 3 kW | 3 kW | 3 kW | 3 kW | 3 kW | 3 kW | 3 kW | 3 kW | 3 kW | 3 kW | 3 kW |
| **Power consumption and capacity** | | | | | | | | | | | | | | |
| Consumption in low amps (W) | 3280 W | 3280 W | 5200 W | 4400 W | 4400 W | 3280 W | 3870 W | 3460 W | 3460 W | 3250 W | 9500 W | 7000 W | 7000 W | 7000 W |
| Required power (A) at 230 V | 14.3 A | 14.3 A | 22.6 A | 19.1 A | 19.1 A | 14.3 A | 16.8 A | 15.0 A | 15.0 A | 14.1 A | 41.3 A | 30.4 A | 30.4 A | 30.4 A |
| 230 V or 400 V III connection | • | • | • | • | • | • | • | • | • | • | • | • | • | • |
| Water capacity (litres) | 975 l | 975 l | 1.610 l | 1.138 l | 1.138 l | 780 l | 980 l | 900 l | 700 l | 360 l | 6.780 l | 8.500 l | 6.000 l | 6.000 l |
| Spa weight (Empty / Full) | 450 kg / 1425 kg | 450 kg / 1425 kg | 378 kg / 1988 kg | 327 kg / 1227 kg | 327 kg / 1465 kg | 229 kg / 1009 kg | 305 kg / 1285 kg | 292 kg / 1192 kg | 229 kg / 929 kg | 197 kg / 557 kg | 1379 kg / 8159 kg | 1177 kg / 9677 kg | 1177 kg / 7177 kg | 1150 kg / 7150 kg |

## SPA RANGE - OCEAN DREAMS RANGE

### Pure - Code 68450





WHITE (44)
SOLID SURFACE CABINET

| TECHNICAL SHEET | |
|---|---|
| Size in cm (± 2cm) | 220 x 220 x 78 |
| Positions (Seats / Loungers) | 4 (4 / -) |
| Jets + blower nozzles | 27 + 12 |
| Maximum consumption in low amp - (A) at 230 V | 3280 W - 14.3 A |

**Spa coding with options generated from the table on page 363.**

**Options:**
- ECOSpa
- Audio Bluetooth 4.1
- Nordic Insulation
- Wi-Fi Touch Panel
- Blue Connect Plus

| Description | Code |
|---|---|
| PURE White Solid Surface Cabinet + PureLine + ECOSpa | **68450SS336** |
| PURE White Solid Surface Cabinet + PureLine + Bluetooth Audio+ ECOSpa | **68450SS337** |

### New'Art - Code 68449



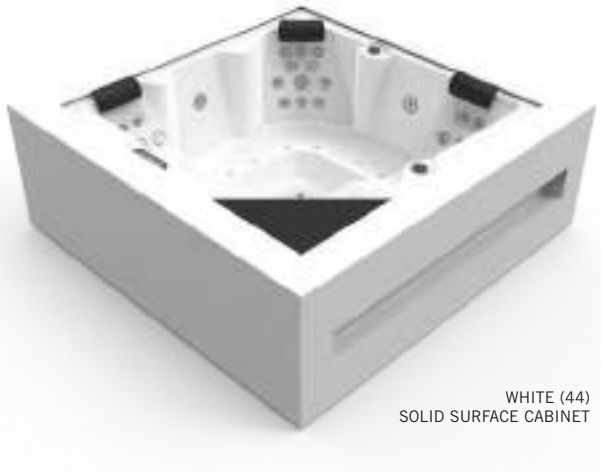

WHITE (44)
SOLID SURFACE CABINET

| TECHNICAL SHEET | |
|---|---|
| Size in cm (± 2cm) | 220 x 220 x 78 |
| Positions (Seats / Loungers) | 5 (3 / 2) |
| Jets + blower nozzles | 28 + 14 |
| Maximum consumption in low amp - (A) at 230 V | 3280 W - 14.3 A |

**Spa coding with options generated from the table on page 363.**

**Options:**
- ECOSpa
- Audio Bluetooth 4.1
- Nordic Insulation
- Wi-Fi Touch Panel
- Blue Connect Plus

| Description | Code |
|---|---|
| NEW'ART White Solid Surface Cabinet + PureLine + ECOSpa | **68449SS336** |
| NEW'ART White Solid Surface Cabinet + PureLine + Bluetooth Audio + ECOSpa | **68449SS337** |

*We reserve the right to change, wholly or partially, the features of our products and the contents of this document, without prior notice*

## SPA RANGE - OCEAN DREAMS RANGE

### Evolution - Code 32474





STERLING COLOUR (59)
THUNDER CABINET

| TECHNICAL SHEET | |
|---|---|
| Size in cm (± 2cm) | 233 x 233 x 90 |
| Positions (Seats / Loungers) | 5 (3 / 2) |
| Jets + blower nozzles | 54 + 16 |
| Maximum consumption in low amp - (A) at 230 V | 5200 W - 22,6 A |

**Spa coding with options generated from the table on page 363.**

**Options:**
- ECOSpa
- Audio Bluetooth 4.1
- Nordic Insulation
- Wi-Fi Touch Panel
- Blue Connect Plus

| Description | Code |
|---|---|
| EVOLUTION Metallic structure + Stainless steel jets + LumiPlus + Cover | **32474L4320** |
| EVOLUTION Graphite cabinet + Stainless steel jets + Stainless steel bar + LumiPlus + Cover | **32474LK332** |
| EVOLUTION Thunder cabinet + Stainless steel jets + Stainless steel bar + LumiPlus + Cover | **32474LR332** |
| EVOLUTION Creek cabinet + Stainless steel jets + Stainless steel bar + LumiPlus + Cover | **32474LT332** |
| EVOLUTION Butterfly Cabinet + Stainless Steel Jets + Stainless Steel Bar + LumiPlus + Cover | **32474LW332** |

### Atlantida 70 - Code 62399





STERLING COLOUR (59)
THUNDER CABINET

| TECHNICAL SHEET | |
|---|---|
| Size in cm (± 2cm) | 216 x 216 x 90 |
| Positions (Seats / Loungers) | 5 (3 / 2) |
| Jets + blower nozzles | 52 + 14 |
| Maximum consumption in low amp - (A) at 230 V | 4400 W / 19.1 A |

**Spa coding with options generated from the table on page 363.**

**Options:**
- ECOSpa
- Audio Bluetooth 4.1
- Nordic Insulation
- Wi-Fi Touch Panel
- Blue Connect Plus

| Description | Code |
|---|---|
| ATLANTIDA 70 Metallic structure + Stainless steel jets + LumiPlus + Cover | **62399A4320** |
| ATLANTIDA 70 Graphite cabinet + Stainless steel jets + Stainless steel bar + LumiPlus + Cover | **62399AK332** |
| ATLANTIDA 70 Thunder cabinet + Stainless steel jets + Stainless steel bar + LumiPlus + Cover | **62399AR332** |
| ATLANTIDA 70 Creek cabinet + Stainless steel jets + Stainless steel bar + LumiPlus + Cover | **62399AT332** |
| ATLANTIDA 70 Butterfly Cabinet + Stainless Steel Jets + Stainless Steel Bar + LumiPlus + Cover | **62399AW332** |



*We reserve the right to change, wholly or partially, the features of our products and the contents of this document, without prior notice*

## SPA RANGE - OCEAN DREAMS RANGE

### Pacific 70 - Code 69130





STERLING COLOUR (59)
CREEK CABINET

| TECHNICAL SHEET | |
|---|---|
| Size in cm (± 2cm) | 216 x 216 x 90 |
| Positions (Seats / Loungers) | 6 (5 / 1) |
| Jets + blower nozzles | 52 + 10 |
| Maximum consumption in low amp - (A) at 230 V | 4400 W / 19.1 A |

**Spa coding with options generated from the table on page 363.**

**Options:**
- ECOSpa
- Audio Bluetooth 4.1
- Nordic Insulation
- Wi-Fi Touch Panel
- Blue Connect Plus

| Description | Code |
|---|---|
| PACIFIC 70 Metal Structure + Stainless Steel Jets + LumiPlus + Cover | **69130A4320** |
| PACIFIC 70 Graphite Cabinet + Stainless Steel Jets + Stainless Steel Bar + LumiPlus + Cover | **69130AK332** |
| PACIFIC 70 Thunder Cabinet + Stainless Steel Jets + Stainless Steel Bar + LumiPlus + Cover | **69130AR332** |
| PACIFIC 70 Creek Cabinet + Stainless Steel Jets + Stainless Steel Bar + LumiPlus + Cover | **69130AT332** |
| PACIFIC 70 Butterfly Cabinet + Stainless Steel Jets + Stainless Steel Bar + LumiPlus + Cover | **69130AW332** |

### Ocean 70 - Code 69863





WHITE (44)
THUNDER CABINET

| TECHNICAL SHEET | |
|---|---|
| Size in cm (± 2cm) | 216 x 167 x 74 |
| Positions (Seats / Loungers) | 3 (1 / 2) |
| Jets | 42 |
| Maximum consumption in low amp - (A) at 230 V | 3280 W / 14.3 A |

**Spa coding with options generated from the table on page 363.**

**Options:**
- ECOSpa
- Audio Bluetooth 4.1
- Nordic Insulation
- Wi-Fi Touch Panel
- Blue Connect Plus

| Description | Code |
|---|---|
| OCEAN 70 Metal Structure + Stainless Steel Jets + LumiPlus + Cover | **69863A4320** |
| OCEAN 70 Graphite Cabinet + Stainless Steel Jets + Stainless Steel Bar + LumiPlus + Cover | **69863AK332** |
| OCEAN 70 Thunder Cabinet + Stainless Steel Jets + Stainless Steel Bar + LumiPlus + Cover | **69863AR332** |
| OCEAN 70 Creek Cabinet + Stainless Steel Jets + Stainless Steel Bar + LumiPlus + Cover | **69863AT332** |
| OCEAN 70 Butterfly Cabinet + Stainless Steel Jets + Stainless Steel Bar + LumiPlus + Cover | **69863AW332** |

*We reserve the right to change, wholly or partially, the features of our products and the contents of this document, without prior notice*

## SPA RANGE - ESSENTIAL RANGE

### Select - Code 62398





STERLING COLOUR (59)
GRAPHITE CABINET

| TECHNICAL SHEET | |
|---|---|
| Size in cm (± 2cm) | 216 x 198 x 90 |
| Positions (Seats / Loungers) | 6 (5 / 1) |
| Jets | 52 |
| Maximum consumption in low amp - (A) at 230 V | 3870 W / 16.8 A |

**Spa coding with options generated from the table on page 363.**

**Options:**
- LumiPlus
- ECOSpa
- Audio Bluetooth 2.1

| Description | Code |
|---|---|
| SELECT Metallic structure + Stainless steel jets + Cover | **62398A4300** |
| SELECT Graphite cabinet + Stainless steel jets + Cover | **62398AP300** |
| SELECT Thunder cabinet + Stainless steel jets + Cover | **62398AQ300** |

### Emotion - Code 58604





STERLING COLOUR (59)
GRAPHITE CABINET

| TECHNICAL SHEET | |
|---|---|
| Size in cm (± 2cm) | 216 x 198 x 90 |
| Positions (Seats / Loungers) | 5 (3 / 2) |
| Jets | 34 |
| Maximum consumption in low amp - (A) at 230 V | 3460 W - 15..0 A |

**Spa coding with options generated from the table on page 363.**

**Options:**
- ECOSpa

| Description | Code |
|---|---|
| EMOTION Metallic structure + Stainless steel jets + Cover | **58604S4300** |
| EMOTION Graphite cabinet + Stainless steel jets + Cover | **58604SP300** |
| EMOTION Thunder cabinet + Stainless steel jets + Cover | **58604SQ300** |



*We reserve the right to change, wholly or partially, the features of our products and the contents of this document, without prior notice*

## SPA RANGE - ESSENTIAL RANGE

### Equilibre - Code 58603





STERLING COLOUR (59)
GRAPHITE CABINET

| TECHNICAL SHEET | |
|---|---|
| Size in cm (± 2cm) | 216 x 148 x 90 |
| Positions (Seats / Loungers) | 3 (2 / 1) |
| Jets | 24 |
| Maximum consumption in low amp - (A) at 230 V | 3460 W - 15.0 A |

**Spa coding with options generated from the table on page 363.**

**Options:**
- ECOSpa

| Description | Code |
|---|---|
| EQUILIBRE Metallic structure + Stainless steel jets + Cover | **58603S4300** |
| EQUILIBRE Graphite cabinet + Stainless steel jets + Cover | **58603SP300** |
| EQUILIBRE Thunder cabinet + Stainless steel jets + Cover | **58603SQ300** |

### Corner - Code 43930





PEARL CAMEO COLOUR (72)
COASTAL GREY CABINET

| TECHNICAL SHEET | |
|---|---|
| Size in cm (± 2cm) | 166 x 200 x 71 |
| Positions (Seats / Loungers) | 2 (1 / 1) |
| Jets + blower nozzles | 22 + 7 |
| Maximum consumption in low amp - (A) at 230 V | 3250 W - 14.1 A |

**Spa coding with options generated from the table on page 363.**

**Options:**
- ECOSpa

| Description | Code |
|---|---|
| CORNER Metallic structure + S.S. Jets + Cover | **43930S4300** |
| CORNER Grey Cabinet + Stainless Steel jets + Cover | **43930S1300** |

*We reserve the right to change, wholly or partially, the features of our products and the contents of this document, without prior notice*

## SPA RANGE - SWIMSPA RANGE

### Swimspa Dual - Code 69126



WHITE (44)
COASTAL GREY CABINET





WHITE (44)
URBAN GREY CABINET

| TECHNICAL SHEET | |
|---|---|
| Size in cm (± 2cm) | 575 x 230 x 138 |
| Places (Seats/Loungers)<br>- Swimming area:<br>- Spa area: | <br>1 Vertical<br>3 (2 / 1) |
| Jets <br>- Swimming area:<br>- Spa area: | <br>37 Jets<br>15+5 Turbo jets |
| Max. consumption in low amp - (A) at 230 V | 9500 W / 41.3 A |

**Coding generated with the initial table on page 363.**

**Options:**
- ECOSpa
- Audio Bluetooth 4.1
- Blue Connect Plus

| Description | Code |
|---|---|
| DUAL SWIMSPA Coastal Grey Cabinet + Stainless Steel Jets + LumiPlus + Cover | **69126A1320** |
| DUAL SWIMSPA Urban Grey Cabinet + Stainless Steel Jets + LumiPlus + Cover | **69126AB320** |
| DUAL SWIMSPA Metallic Structure + Stainless steel jets + LumiPlus + Cover | **69126A4320** |

### Swimspa Mediterranea - Code 64414



WHITE (44)
COASTAL GREY CABINET



WHITE (44)
URBAN GREY CABINET





| TECHNICAL SHEET | |
|---|---|
| Size in cm (± 2cm) | 500 x 230 x 138 |
| Positions (Seats / Loungers) | 3 (2 / 1) |
| Jets | 25 jets +<br>5 Turbo jets +<br>3 Fountain jets |
| Max. consumption in low amp - (A) at 230 V | 7.000 W / 30.4 A |

**Coding generated with the initial table on page 363.**

**Options:**
- ECOSpa
- Audio Bluetooth 4.1
- Blue Connect Plus

| Description | Code |
|---|---|
| MEDITERRANEA SWIMSPA Coastal Grey Cabinet + Stainless Steel jets + LumiPlus + Cover | **64414A1320** |
| MEDITERRANEA SWIMSPA Urban Grey Cabinet + Stainless Steel jets + LumiPlus + Cover | **64414AB320** |
| MEDITERRANEA SWIMSPA Metallic Structure + Stainless Steel jets + LumiPlus + Cover | **64414A4320** |
| MEDITERRANEA SWIMSPA For Kit + Stainless Steel jets + Colour LEDS + Digital Control Panel + Cover | **65353SE311** |

Model 65353 must be supplied with the compact kit, code 64972CE001.

*We reserve the right to change, wholly or partially, the features of our products and the contents of this document, without prior notice*

## SPA RANGE - SWIMSPA RANGE

### Swimspa Creta - Code 67203



WHITE (44)
COASTAL GREY CABINET





WHITE (44)
URBAN GREY CABINET



| TECHNICAL SHEET | |
|---|---|
| Size in cm (± 2cm) | 400 x 230 x 138 |
| Positions (Seats / Loungers) | 3 (2 / 1) |
| Jets | 48 jets +<br>4 Turbo jets |
| Max. consumption in low amp - (A) at 230 V | 7000 W / 30.4 A |

**Coding generated with the initial table on page 363.**

**Options:**
- ECOSpa
- Audio Bluetooth 4.1
- Blue Connect Plus

| Description | Code |
|---|---|
| CRETA SWIMSPA Coastal Grey Cabinet + Stainless Steel jets + LumiPlus + Cover | **67203A1320** |
| CRETA SWIMSPA Urban Grey Cabinet + White LumiPlus | **67203AB320** |
| CRETA SWIMSPA Metal Framework + Stainless steel jets + LumiPlus + Cover | **67203A4320** |
| CRETA SWIMSPA For Kit + Stainless Steel jets + Colour LEDS + Digital Control Panel + Cover | **67587SE311** |

### Swimspa Compact - Code 69128



WHITE (44)
COASTAL GREY CABINET





WHITE (44)
URBAN GREY CABINET

| TECHNICAL SHEET | |
|---|---|
| Size in cm (± 2cm) | 400 x 230 x 138 |
| Positions (Seats / Loungers) | 1 Vertical |
| Jets | 18+5 Turbo Jets |
| Max. consumption in low amp - (A) at 230 V | 7000 W / 30.4 A |

**Coding generated with the initial table on page 363.**

**Options:**
- EcoSpa
- Audio Bluetooth 4.1
- Blue Connect Plus

| Description | Code |
|---|---|
| COMPACT SWIMSPA Coastal Grey Cabinet + Stainless Steel Jets + LumiPlus + Cover | **69128A1320** |
| COMPACT SWIMSPA Urban Grey Cabinet + White LumiPlus | **69128AB320** |
| COMPACT SWIMSPA Metal Structure + Stainless Steel Jets + LumiPlus + Cover | **69128A4320** |
| COMPACT SWIMSPA For kit + Stainless Steel jets + color LEDS + Digital Control Panel+ Cover | **69129SE311** |

*We reserve the right to change, wholly or partially, the features of our products and the contents of this document, without prior notice*

## IN-GROUND RESIDENTIAL SPAS

### Thalassa - Code 40768



WHITE (44)

| TECHNICAL SHEET | |
|---|---|
| Size | 216 x 198 (± 2 cm) |
| Jets + nozzles | 21 + 16 |
| Drain | 1 |
| Electronic control panel | Yes |
| Positions (Seats / Loungers) | 6 (5 / 1) |
| Water Capacity | 980 l |
| Empty/full Spa weight | 251 Kg / 1.231 Kg |
| Headrest | 3 |
| Cover | Optional |
| LED Chromotherapy projector | Yes |
| Jets | Stainless steel |
| Cascade | 1 |
| Metallic structure | Yes |

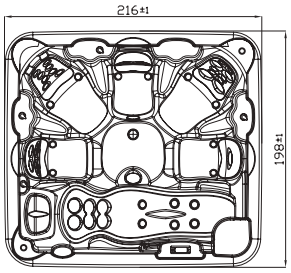


| Description | Code |
|---|---|
| THALASSA Light + Digital control panel | **40768SE310** |
| THALASSA Light + Digital control panel + Cover | **40768SE311** |

**The Spa must be supplied with the filter kit, code 41993CE000 or 41993CE001.**
**Spa cover sold separately. See section "Spa accessories".**

### Baltic 40 - Code 54438



PEARL CAMEO COLOUR (72)

| TECHNICAL SHEET | |
|---|---|
| Size | 216 x 148 (± 2 cm) |
| Jets + nozzles | 14 + 10 |
| Drain | 1 |
| Electronic control panel | Yes |
| Positions (Seats / Loungers) | 3 (2 / 1) |
| Water Capacity | 700 l |
| Empty/full Spa weight | 139 Kg / 839 Kg |
| Headrest | 1 |
| Cover | Optional |
| LED Chromotherapy projector | Yes |
| Jets | Stainless steel |
| Aromatherapy | Yes |
| Cascade | 2 |
| Metallic structure | Yes |

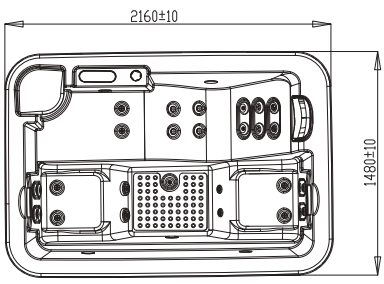


| Description | Code |
|---|---|
| BALTIC 40 + Light + Digital control panel | **54438SE310** |
| BALTIC 40 + Light + Digital control panel + Cover | **54438SE311** |

**The Spa must be supplied with the filter kit, code 41993CE000 or 41993CE001.**
**Spa cover sold separately. See section "Spa accessories".**

*We reserve the right to change, wholly or partially, the features of our products and the contents of this document, without prior notice*

# IN-GROUND RESIDENTIAL SPAS

## Ronda 30 - Code 49859



PEARL CAMEO COLOUR (72)



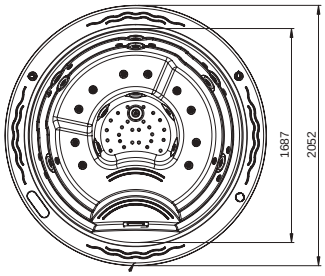


| TECHNICAL SHEET | |
|---|---|
| **Size** | Ø 205 (± 2 cm) |
| **Jets + nozzles** | 20 + 10 |
| **Drain** | 1 |
| **Digital control panel** | Yes |
| **Positions (Seats / Loungers)** | 5 (5 / 0) |
| **Water Capacity** | 680 l |
| **Empty/full Spa weight** | 132 kg - 812 kg |
| **Chromotherapy LED light** | Yes |
| **Jets** | Stainless steel |
| **Metallic structure** | Yes |
| **Cover** | Optional |

| Description | Code |
|---|---|
| RONDA 30 + Light + Digital control panel | **49859SE310** |
| RONDA 30 + Light + Digital control panel + Cover | **49859SE311** |

**The Spa must be supplied with the filter kit. code 41993CE000 or 41993CE001.**

**Fully fitted with pipe assembly, skimmer, main drain, filtering, hydromassage and blower nozzles, hydromassage digital control buttons and two Venturi inlets. With adjustable bracket for easy installation.**

## Inca - Code 04005



WHITE (44)



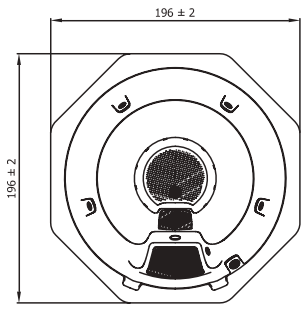


| TECHNICAL SHEET | |
|---|---|
| **Size** | 196 x 196 (± 2 cm) |
| **Jets + nozzles** | 8 + 10 |
| **Main drain** | 1 |
| **Digital control panel** | Yes |
| **Positions (Seats / Loungers)** | 6 (6 / 0) |
| **Water Capacity** | 815 l |
| **Empty/full Spa weight** | 160 Kg / 975 Kg |
| **Chromotherapy LED light** | Yes |
| **Jets** | Stainless steel |
| **Metallic structure** | Yes |

| Description | Code |
|---|---|
| INCA + Light + Digital control panel | **04005SE310** |
| INCA + Light + Digital control panel + Cover | **04005SE311** |

**The Spa must be supplied with the filter kit. code 41993CE000 or 41993CE001.**

**Fully fitted with pipe assembly, skimmer, main drain, filtering, hydromassage and blower nozzles, hydromassage digital control buttons and two Venturi inlets. With adjustable bracket for easy installation.**

*We reserve the right to change, wholly or partially, the features of our products and the contents of this document, without prior notice*

# COMPACT FILTRATION FOR SPAS

## Compact kit for Thalassa, Baltic, Inca and Ronda 30



| Code | Oxynator | Digital control | Compact weight | Assembly volume | Max. spa volume | Massage pump |
|---|---|---|---|---|---|---|
| 41993CE000 | | • | 60 kg | 2.05 m³ | 1000 l | 2.2 kW |
| 41993CE001 | • | • | | | | |

| Code | Filter (mm) | Filtration pump | Blower pump | Electric heater | Voltage | Power requirements | Length x width x height |
|---|---|---|---|---|---|---|---|
| 41993 | 500 | 0.6 kW 7000 l/h | 0.9 kW | 3 kW | 230 V or 400 V III | 3852 W / 16.7 A* | 115 x 75 x 105 mm |

* Consumption in Low Amp at 230 V.

## Compact kit for Swimspa Mediterranea



| Code | Oxynator | Digital control panel | Chromotherapy | Compact weight | Assembly volume | Max. spa volume | Massage pump |
|---|---|---|---|---|---|---|---|
| 64972CE001 | • | • | • | 70 kg | 2.05 m³ | 8500 l | 3 x 2.2 kW / 3hp |

| Code | Filter (mm) | Filtration pump | Electric heater | Voltage | Power requirements | Length x width x height |
|---|---|---|---|---|---|---|
| 64972 | 500 | 0.6 kW 7000 l/h | 3 kW | 230 V or 400 V III | 7352 W / 31.9 A* | 114 x 100 x 112 mm |

* Consumption in Low Amp at 230 V.



## Covers for spas



Portable spa cover

| | Code | Standard Pack | Standard Weight in kg | Standard Volume in m³ |
|---|---|---|---|---|
| THALASSA spa cover | **17139** | 1 | 17 | 0.40 |
| BALTIC 40 / OCEAN 40 spa cover | **42345** | 1 | 16 | 0.36 |
| RONDA 30 spa cover | **51288** | 1 | 15 | 0.27 |
| INCA spa cover | **23193** | 1 | 17 | 0.40 |



## Cover Stand

Metal Stand for simple handling of the cover.

| Code | Standard Pack | Standard Weight in kg | Standard Volume in m³ |
|---|---|---|---|
| **28462** | 1 | 10 | 0.118 |

*We reserve the right to change, wholly or partially, the features of our products and the contents of this document, without prior notice*

# COMPLEMENTS FOR SPAS

## Spa access steps

| | | Code | Standard Pack | Standard Weight in kg | Standard Volume in m³ |
|---|---|---|---|---|---|
| Synthetic wood staircase in Graphite | | **42002CL0K** | 1 | 15 | 0.09 |
| Basic staircase coastal grey | | **60194** | 1 | 5 | 0.07 |
| Swimspa staircase | | **56918CL01** | 1 | 35 | 0.59 |
| Synthetic wood staircase in Thunder | | **42002CL0R** | 1 | 15 | 0.09 |
| Synthetic wood staircase in Creek | | **42002CL0T** | 1 | 15 | 0.09 |
| Synthetic wood staircase in Butterfly | New | **42002CL0W** | 1 | 15 | 0.09 |



**42002CL0K**



**60194**



**56918CL01**

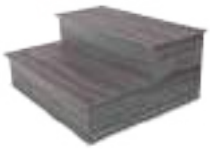

**42002CL0R**



**42002CL0T**



**42002CL0T**



## Spa parasol in Cameo with LED

| | Code | Standard Pack | Standard Weight in kg | Standard Volume in m³ |
|---|---|---|---|---|
| Spa parasol in Cameo with LED | **60220** | 2 | 15 | 2 |



## Portable spa handrail holder

| | Code | Standard Pack | Standard Weight in kg | Standard Volume in m³ |
|---|---|---|---|---|
| Portable spa handrail holder | **60226** | 2 | 8 | 0.95 |



## Spa filter cartridge cleaner

| | Code | Standard Pack | Standard Weight in kg | Standard Volume in m³ |
|---|---|---|---|---|
| Spa filter cartridge cleaner | **60197** | 1 | 2 | 0.04 |

## LINER ACCESSORIES



### 2 ½" adjustable jet

Regulates proportion of air-water outlet. 50 mm diameter water inlet and 32 mm air inlet. Flow: 4 m³/hour. Pressure 0.8 a.t.m.

| Code | Standard Pack | Standard Weight in kg | Standard Volume in m³ |
|---|---|---|---|
| **32641** | 12 | 7.625 | 0.028 |



### 2" threaded jet

Water inlet diameter of 50 mm and air inlet diameter of 32 mm. Flow rate of 4 m³/hour. Atm pressure of 0.8.

| Code | Standard Pack | Standard Weight in kg | Standard Volume in m³ |
|---|---|---|---|
| **33586** | 12 | 7.625 | 0.028 |



### 2" jet thread for liner

Water inlet diameter of 50 mm and air inlet diameter of 32 mm. Flow rate of 4 m³/hour Atm pressure of 0.8.

| Code | Standard Pack | Standard Weight in kg | Standard Volume in m³ |
|---|---|---|---|
| **70532** | 12 | 7.625 | 0.028 |



### 2" main drain

With elbow for gluing to Ø 50 mm pipe.

| Code | Standard Pack | Standard Weight in kg | Standard Volume in m³ |
|---|---|---|---|
| **04042** | 15 | 4.8 | 0.028 |



### Adjustable air inlet

1"for air regulation to Venturi system for jet function.

| Code | Standard Pack | Standard Weight in kg | Standard Volume in m³ |
|---|---|---|---|
| **04045** | 25 | 6.0 | 0.028 |



### Adjustable silent air inlet

Silent Venturi for jet air flow control. Air intake is through embedded part. Attaches to air distributor code 33937.

| Code | Standard Pack | Standard Weight in kg | Standard Volume in m³ |
|---|---|---|---|
| **33938** | 25 | 8.5 | 0.028 |

## LINER ACCESSORIES



### 5 outlet air distributor for Venturi system

5 outlet air distributor for gluing to Venturi system with code 33938. Outlets for clamping a flexible hosepipe of 10 mm inner diameter.

| Code | Standard Pack | Standard Weight in kg | Standard Volume in $m^3$ |
|---|---|---|---|
| **33937** | 25 | 8.5 | 0.028 |



### 6 outlet air distributor for Venturi system

6 outlet air distributor to attach to pipes with a 10 mm inner diameter and glue to 15 mm pipes.

| Code | Standard Pack | Standard Weight in kg | Standard Volume in $m^3$ |
|---|---|---|---|
| **33936** | 25 | 8.5 | 0.028 |



### 10 outlet air distributor

10 outlet air distributor to attach to pipes with a 10 mm inner diameter and glue to 50 mm pipes.

| Code | Standard Pack | Standard Weight in kg | Standard Volume in $m^3$ |
|---|---|---|---|
| **35346** | 25 | 8.5 | 0.028 |



### 4 water outlet manifold

Manifold for gluing to 50 mm pipe, 4 outlets for clamping a hosepipe of 20 mm inner diameter.

| Code | Standard Pack | Standard Weight in kg | Standard Volume in $m^3$ |
|---|---|---|---|
| **33934** | 25 | 8.5 | 0.028 |



### 8 water outlet manifold

Manifold for gluing to 50 mm pipe, 8 outlets for clamping a hosepipe of 20 mm inner diameter.

| Code | Standard Pack | Standard Weight in kg | Standard Volume in $m^3$ |
|---|---|---|---|
| **33935** | 25 | 8.5 | 0.028 |



### Threaded blower nozzle

For air distribution into the SPA from the blowers. Flow rate 5.4 to 7.5 $m^3/h$.

| | Code | Standard Pack | Standard Weight in kg | Standard Volume in $m^3$ |
|---|---|---|---|---|
| White plastic front panel | **27602** | 80 | 1.6 | 0.03 |
| Stainless steel front panel | **43440** | 80 | 1.6 | 0.03 |

# LINER ACCESSORIES



## Blower nozzle for gluing

For air distribution into the SPA from the blowers. Flow rate 5.4 to 7.5 m³/h.

| | Code | Standard Pack | Standard Weight in kg | Standard Volume in m³ |
|---|---|---|---|---|
| White plastic front panel | **28460** | 80 | 1.6 | 0.03 |
| Stainless steel front panel | **43441** | 80 | 1.6 | 0.03 |



## Blower nozzle lateral outlet 3/8"

For air distribution into the SPA from the blowers. Flow rate 5.4 to 7.5 m³/h.

| | Code | Standard Pack | Standard Weight in kg | Standard Volume in m³ |
|---|---|---|---|---|
| White plastic front panel | **34318** | 80 | 1.6 | 0.03 |
| Stainless steel front panel | **43442** | 80 | 1.6 | 0.03 |



## 2" return unit

For return line and massage.

| Code | Standard Pack | Standard Weight in kg | Standard Volume in m³ |
|---|---|---|---|
| **04034** | 25 | 5.0 | 0.028 |



## Adjustable air impulsion inlet

For air distribution by means of the blowers. Maximum flow rate 18 m³/h.

| Code | Standard Pack | Standard Weight in kg | Standard Volume in m³ |
|---|---|---|---|
| **49818** | 12 | 4.24 | 0.021 |

**09667** **04047**



**04048**

## Pneumatic push button

For starting and stopping massage and hydromassage functions.

| | Code | Standard Pack | Standard Weight in kg | Standard Volume in m³ |
|---|---|---|---|---|
| For max. 15 m | **04047** | 20 | 0.5 | 0.028 |
| For max. 7 m simple | **04048** | 40 | 1.6 | 0.028 |
| For max. 7 m simple, with thread | **09667** | 20 | 0.5 | 0.028 |

## Plastic tube

For pneumatic signal from press button to switch. Inner Ø 3.5 mm.

| Code | Standard Pack | Standard Weight in kg | Standard Volume in m³ |
|---|---|---|---|
| **04054** | 50 | 3.33 | 0.006 |

## LINER ACCESSORIES



### Rotating jet

Flow rate 2 to 2.5 m³/h.

| Code | Standard Pack | Standard Weight in kg | Standard Volume in m³ |
|---|---|---|---|
| **20297** | 25 | 3.33 | 0.028 |



### Twin rotating jet

Flow rate 2 to 2.5 m³/h.

| Code | Standard Pack | Standard Weight in kg | Standard Volume in m³ |
|---|---|---|---|
| **20296** | 25 | 3.83 | 0.028 |



### Rotating jet housing

| Code | Standard Pack | Standard Weight in kg | Standard Volume in m³ |
|---|---|---|---|
| **20299** | 15 | 3.33 | 0.028 |



### Jet housing for linear pool

| Code | Standard Pack | Standard Weight in kg | Standard Volume in m³ |
|---|---|---|---|
| **63144** | 12 | 3.33 | 0.028 |



### Moveable tube jet nozzle to install in substitution of a fixed one

Compatible with codes 20295 and 20299. Flow rate 2 to 2.5 m³/h.

| Code | Standard Pack | Standard Weight in kg | Standard Volume in m³ |
|---|---|---|---|
| **20298** | 1 | 0.8 | 0.001 |



### 2 ½" wall conduit for rotating jet

Made up of: The jet body, 20 cm wall conduit, niche, threaded fitting, front body. Jet not included.
Flow rate 5 m³/h at 1 bar.

| Code | Standard Pack | Standard Weight in kg | Standard Volume in m³ |
|---|---|---|---|
| **20295** | 4 | 4 | 0.018 |

Stainless steel accessories should not be used in pools with salt electrolysis systems

# POOL JET ACCESSORIES

**Pool Jet accessories are designed for pools that have a hydromassage section .**



## Pool Jet 1 Directional Jet

Flow rate 2.4 to 3.6 m³/h. Accessories compatible with 2½" handrail for Pool Jet.

| | Code | Standard Pack | Standard Weight in kg | Standard Volume in m³ |
|---|---|---|---|---|
| Stainless steel finish* | **63148** | 25 | 3.83 | 0.028 |
| White finish | **63149** | 25 | 3.83 | 0.028 |



## Pool Jet 1 Rotating Jet

Flow rate 2.4 to 3.6 m³/h. Accessories compatible with 2½" handrail for Pool Jet.

| | Code | Standard Pack | Standard Weight in kg | Standard Volume in m³ |
|---|---|---|---|---|
| Stainless steel finish* | **63150** | 25 | 3.83 | 0.028 |
| White finish | **63151** | 25 | 3.83 | 0.028 |



## Pool Jet 2 Rotating Jets

Flow rate 2.4 to 3.6 m³/h. Accessories compatible with 2½" handrail for Pool Jet.

| | Code | Standard Pack | Standard Weight in kg | Standard Volume in m³ |
|---|---|---|---|---|
| Stainless steel finish* | **63152** | 25 | 3.83 | 0.028 |
| White finish | **63153** | 25 | 3.83 | 0.028 |



## Pool Jet Rotating Beehive

Flow rate 2.4 to 3.6 m³/h. Accessories compatible with 2½" handrail for Pool Jet.

| | Code | Standard Pack | Standard Weight in kg | Standard Volume in m³ |
|---|---|---|---|---|
| Stainless steel finish* | **63154** | 25 | 3.83 | 0.028 |
| White finish | **63155** | 25 | 3.83 | 0.028 |



## Wall conduit for Pool Jet

Made up of: The jet Straight body (20 mm Air x 32 mm Water), 20 cm wall conduit, niche, front body. Jet not included.

| Code | Standard Pack | Standard Weight in kg | Standard Volume in m³ |
|---|---|---|---|
| **63146** | 4 | 4 | 0.018 |

**Chrome accessories only suitable for tubs that do not use any chemical treatment. Not suitable for pools.**

# ACCESSORIES FOR MINISPAS



## 1 ½" main drain

With elbow for gluing Ø 50 mm pipe.

| | Code | Standard Pack | Standard Weight in kg | Standard Volume in $m^3$ |
|---|---|---|---|---|
| Chrome-plated bronze front panel | **04104** | 3 | 7.5 | 0.028 |



## Adjustable air inlet

¾" to control air massage to Venturi system for jet function

| | Code | Standard Pack | Standard Weight in kg | Standard Volume in $m^3$ |
|---|---|---|---|---|
| Chrome-plated bronze front panel | **04108** | 10 | 9.0 | 0.028 |
| White plastic front panel | **04110** | 10 | 3.0 | 0.028 |



## Pneumatic push button

For starting and stopping massage and hydromassage functions.

| | Code | Standard Pack | Standard Weight in kg | Standard Volume in $m^3$ |
|---|---|---|---|---|
| Chrome-plated bronze front panel | **04111** | 10 | 6.0 | 0.028 |
| White plastic front panel | **04113** | 12 | 6.0 | 0.028 |



## Blower Inlet

For minispa air distribution from the blower. 1 ½" thread.

| | Code | Standard Pack | Standard Weight in kg | Standard Volume in $m^3$ |
|---|---|---|---|---|
| Chrome-plated bronze front panel | **04114** | 20 | 7.5 | 0.028 |



## 1¼" jet with adaptor to water return

Jet with adaptor to return water to pipe. Also adaptor to connect to water return and air circulation pipe, solvent for inner Ø 32 mm, directional.

| | Code | Standard Pack | Standard Weight in kg | Standard Volume in $m^3$ |
|---|---|---|---|---|
| Chrome-plated bronze front panel | **04095** | 8 | 12.0 | 0.028 |
| White plastic front panel | **04097** | 12 | 12.0 | 0.028 |



## 1¼" jet

With adaptor to connect to return water pipe and Venturi system to glue to Ø 32 mm pipe, directional.

| | Code | Standard Pack | Standard Weight in kg | Standard Volume in $m^3$ |
|---|---|---|---|---|
| Chrome-plated bronze front panel | **04092** | 8 | 10.0 | 0.028 |
| White plastic front panel | **04094** | 24 | 5.0 | 0.028 |



## 1¼" return inlet

| | Code | Standard Pack | Standard Weight in kg | Standard Volume in $m^3$ |
|---|---|---|---|---|
| Built in chrome brass | **04100** | 4 | 15.0 | 0.028 |
| Built in white plastic | **04103** | 12 | 3.5 | 0.028 |

## ELECTRICAL ACCESSORIES FOR SPAS / MINI SPAS



### Programmable digital thermostat

To operate ON/OFF contactor.

| Code | Standard Pack | Standard Weight in kg | Standard Volume in $m^3$ |
|---|---|---|---|
| **11288** | 20 | 0.5 | 0.003 |



### Electric press button

230 V 50 Hz.

| Code | Standard Pack | Standard Weight in kg | Standard Volume in $m^3$ |
|---|---|---|---|
| **33387** | 1 | 1.5 | 0.003 |



### Electropneumatic equipment

With two switches. Up to 1.47 kW (2HP).

| Code | Standard Pack | Standard Weight in kg | Standard Volume in $m^3$ |
|---|---|---|---|
| **04053** | 2 | 4.0 | 0.028 |



### Pneumatic switch

For starting and stopping massage and hydromassage functions.

| | Code | Standard Pack | Standard Weight in kg | Standard Volume in $m^3$ |
|---|---|---|---|---|
| Pneumatic switch | **04050** | 25 | 1.0 | 0.028 |
| Pneumatic switch and presostat | **11290** | 6 | 0.5 | 0.028 |
| Pneumatic presostat | **11291** | 12 | 1.0 | 0.028 |

# AIR BLOWERS



## Continuous operation lateral turbo blower pump

Air pump designed for spas, hydromassage tubs and similar which produces a constant stream of air bubbles at medium and high air volume levels. It can also be used to stir up the filter bed, for example in backwash cycles where a low intensity air current is required. The filter casing and impeller are made from an injected aluminium alloy whilst the motor spindle is manufactured from stainless steel, with the impeller dynamically balanced and directly adapted to the spindle. The motors, 2 single phase or 3 phase for continuous use, are made from steel in compliance with CEI 2/3 1988 regulations, and feature IP54 external protection and class-F insulation. The pumps can be mounted horizontally or vertically. Moreover, since there is no contact between the mobile parts and the pump static discharges, neither lubrication nor maintenance is necessary and it also doesn't cause wear on the parts.

The turbines have a maximum working temperature of 40ºC. Do not use in conjunction with aggressive, inflammable or explosive gases.

| Model | Code | Frequency (Hz) | Power supply (V) | Phase | Flow rate ($m^3/h$) | Maximum pressure (mbar) | Standard weight (kg) | Standard volume ($m^3$) |
|---|---|---|---|---|---|---|---|---|
| Blower 0.4 kW | **33970** | 50 | Δ 200-240 Y 345-415 | 3 | 80 | 130 | 10 | 0.045 |
| Blower 0.5 kW | | 60 | Δ 220-275 Y 380-480 | 3 | 98 | 170 | | |
| Blower 0.85 kW | **35388** | 50 | 200-240 | 1 | 145 | 160 | 17 | 0.059 |
| Blower 0.95 kW | | 60 | 200-240 | 1 | 175 | 160 | | |
| Blower 0.85 kW | **35387** | 50 | Δ 200-240 Y 345-415 | 3 | 145 | 160 | 16 | 0.045 |
| Blower 0.95 kW | | 60 | Δ 220-275 Y 380-480 | 3 | 175 | 160 | | |
| Blower 1.3 kW | **31090** | 50 | 200-240 | 1 | 210 | 170 | 23 | 0.059 |
| Blower 1.5 kW | | 60 | 200-240 | 1 | 255 | 140 | | |
| Blower 1.3 kW | **31091** | 50 | Δ 200-240 Y 345-415 | 3 | 210 | 170 | 22 | 0.059 |
| Blower 1.5 kW | | 60 | Δ 220-275 Y 380-480 | 3 | 255 | 140 | | |
| Blower 1.5 kW | **33971** | 50 | 200-240 | 1 | 210 | 220 | 24 | 0.064 |
| Blower 1.75 kW | | 60 | 200-240 | 1 | 255 | 220 | | |
| Blower 1.6 kW | **31092** | 50 | Δ 200-240 Y 345-415 | 3 | 210 | 220 | 23 | 0.064 |
| Blower 2.1 kW | | 60 | Δ 220-275 Y 380-480 | 3 | 255 | 220 | | |
| Blower 1.6 kW 2V | **35389** | 50 | Δ 200-240 Y 345-415 | 3 | 150 | 300 | 25 | 0.087 |
| Blower 2.06 kW 2V | | 60 | Δ 220-275 Y 380-480 | 3 | 180 | 310 | | |
| Blower 2.2 kW | **31093** | 50 | Δ 200-240 Y 345-415 | 3 | 318 | 230 | 30 | 0.097 |
| Blower 2.55 kW | | 60 | Δ 220-275 Y 380-480 | 3 | 376 | 220 | | |
| Blower 3.0 kW 2V | **31094** | 50 | Δ 200-240 Y 345-415 | 3 | 230 | 410 | 40 | 0.126 |
| Blower 3.45 kW 2V | | 60 | Δ 220-275 Y 380-480 | 3 | 275 | 400 | | |
| Blower 3.0 kW | **31095** | 50 | Δ 200-240 Y 345-415 | 3 | 318 | 280 | 36 | 0.097 |
| Blower 3.45 kW | | 60 | Δ 220-275 Y 380-480 | 3 | 376 | 280 | | |
| Blower 4.3 kW 2V | **31096** | 50 | Δ 345-415 Y 600-720 | 3 | 520 | 600 | 54 | 0.217 |
| Blower 4.8 kW 2V | | 60 | Δ 380-480 Y 660-720 | 3 | 385 | 320 | | |
| Blower 5.5 kW | **31097** | 50 | Δ 345-415 Y 600-720 | 3 | 530 | 320 | 63 | 0.16 |
| Blower 6.3 kW | | 60 | Δ 380-480 Y 660-720 | 3 | 620 | 340 | | |
| Blower 5.5 kW 2V | **33972** | 50 | Δ 345-415 Y 600-720 | 3 | 320 | 515 | 66 | 0.201 |
| Blower 6.3 kW 2V | | 60 | Δ 380-480 Y 660-720 | 3 | 385 | 530 | | |
| Blower 7.5 kW | **31098** | 50 | Δ 345-415 Y 600-720 | 3 | 530 | 400 | 66 | 0.16 |
| Blower 8.6 kW | | 60 | Δ 380-480 Y 660-720 | 3 | 620 | 400 | | |
| Blower 11 kW 2V | **33973** | 50 | Δ 345-415 Y 600-720 | 3 | 520 | 600 | 104 | 0.353 |
| Blower 12.6 kW 2V | | 60 | Δ 380-480 Y 660-720 | 3 | 620 | 600 | | |
| Blower 12.5 kW | **33974** | 50 | Δ 345-415 Y 600-720 | 3 | 1050 | 270 | 116 | 0.353 |
| Blower 14.5 kW | | 60 | Δ 380-480 Y 660-720 | 3 | 1250 | 260 | | |



## Intermittent operation air blower, 900 W

| | Code | Standard Pack | Standard Weight in kg | Standard Volume in $m^3$ |
|---|---|---|---|---|
| 0.90 kW flow 54 $m^3/h$ at 1.5 m water head | **19289** | 1 | 3.5 | 0.028 |

# AIR BLOWERS



## Water pump

ABS (25%) and fibreglass (75%) housing. A 0.37 kW (0.5 hp) motor. IP-55 electrical connection rating of 24 V 220 V 1~ 50Hz . 2" male suction connection. 1½" male return connection.

**TECHNICAL DETAILS**

| water head | $m^3/h$ |
|---|---|
| 2 | 16.5 |
| 4 | 14.8 |
| 6 | 12.6 |
| 8 | 10 |
| 10 | 7 |

| Code | Standard Pack | Standard Weight in kg | Standard Volume in $m^3$ |
|---|---|---|---|
| **04091** | 1 | 6.0 | 0.016 |



## Intermittent operation air blower

| | Code | Standard Pack | Standard Weight in kg | Standard Volume in $m^3$ |
|---|---|---|---|---|
| 0.74 kW, Flow 65 $m^3/h$ at 1 m water head | **06862** | 1 | 3.5 | 0.028 |
| 1.10 kW, Flow 133 $m^3/h$ at 1 m water head | **06863** | 1 | 3.5 | 0.028 |



## Cala Pump

Centrifugal pump for spas, backwashes and other applications.

- Pump body manufactured in polypropylene reinforced with fibreglass, resistant to pool chemical products thus guaranteeing long and excellent duration.
- Turbine in Noryl.
- Graphite and ceramic mechanical seal.
- AISI 316L stainless steel motor spindle.
- Enclosed motor, completely silent, with IP-55 protection at 2850 r.p.m. Single phase power voltage at 230V-50Hz or triphase at 230/400-50Hz.
- Versions from 1.5 to 4.5 HP.
- Suction and return connections for gluing hoses included with the pump.
- Suction and return at Ø63.



| | Code | Standard Pack | Standard Weight in kg | Standard Volume in $m^3$ |
|---|---|---|---|---|
| Single phase 1.1 kW Cala Pump | **CA150M** | 1 | 15.0 | 0.058 |
| Tri phase 1.1 kW Cala Pump | **CA150T** | 1 | 15.0 | 0.058 |
| Single phase 1.5 kW Cala Pump | **CA200M** | 1 | 16.5 | 0.058 |
| Tri phase 1.5 kW Cala Pump | **CA200T** | 1 | 16.5 | 0.058 |
| Single phase 2.2 kW Cala Pump | **CA300M** | 1 | 19.5 | 0.058 |
| Tri phase 2.2 kW Cala Pump | **CA300T** | 1 | 19.5 | 0.058 |
| Single phase 2.9 kW Cala Pump | **CA400M** | 1 | 22.5 | 0.058 |
| Tri phase 3.3 kW Cala Pump | **CA450T** | 1 | 22.5 | 0.058 |

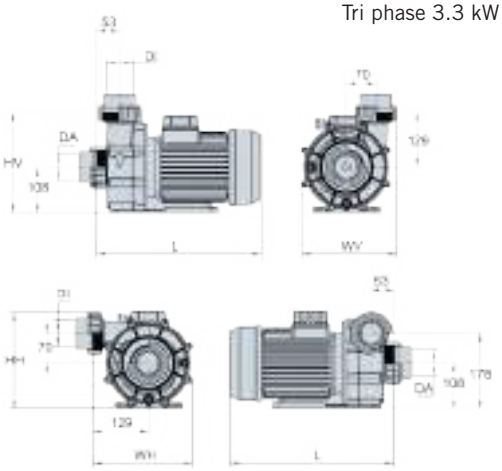

| Code | Power | | Size | | | | | | |
|---|---|---|---|---|---|---|---|---|---|
| | kW | HP | L | WV | HV | WH | HH | DA | DI |
| **CA150M** | 1.1 | 1.5 | 350 | 225 | 237 | 235 | 228 | Ø63 | Ø63 |
| **CA150T** | | | | | | | | | |
| **CA200M** | 1.5 | 2.0 | 365 | 225 | 237 | 235 | 228 | Ø63 | Ø63 |
| **CA200T** | | | | | | | | | |
| **CA300M** | 2.2 | 3.0 | 385 | 225 | 237 | 235 | 228 | Ø63 | Ø63 |
| **CA300T** | | | | | | | | | |
| **CA400M** | 2.9 | 4.0 | 415 | 225 | 237 | 235 | 228 | Ø63 | Ø63 |
| **CA450T** | 3.3 | 4.5 | | | | | | | |

The sauna pictures do not show the standard product (some accessories can be included from table **Accessories Summary**).

Please note the codes of the accessories when ordering.

# SAUNAS

The benefits of an AstralPool sauna range from muscle relaxation to sweat stimulation thanks to their hot and dry environment (relative humidity between 20% and 50%). AstralPool saunas are made from prefabricated panels with interior insulation in mineral wool and aluminium. The wall coating is covered with pre-treated wood that has been fired and dried to last for many years.



**2 seats, code 70470-70471**



**4 seats, code 70439-70442**

The Miramonte sauna can be made to order in the following woods: spruce, thermo Aspen, Canadian spruce and red cedar.

## Miramonte sauna

Miramonte sauna reflects the excellence of a Finnish sauna formed of high-quality white pinewood vertical panels and abachi timber flooring. The entire front panel of the Miramonte sauna is glazed to showcase the LED lighting inside. Also includes 2 benches with abachi headrests and a heater adapted to each size.

| Code | Type | Dimensions (cm) | Heating (kW) | Control unit |
|---|---|---|---|---|
| **70470** | Miramonte sauna | 200 x 150 x 210 | 7 kW 230/400V 3~ | Touchscreen / Exterior |
| **70471** | Miramonte sauna | 200 x 200 x 210 | 7 kW 230/400V 3~ | Touchscreen / Exterior |
| **70439** | Miramonte sauna | 250 x 200 x 210 | 9 kW 230/400V 3~ | Touchscreen / Exterior |
| **70440** | Miramonte sauna | 250 x 250 x 210 | 9 kW 230/400V 3~ | Touchscreen / Exterior |
| **70441** | Miramonte sauna | 300 x 250 x 210 | 10.8 kW 230/400V 3~ | Touchscreen / Exterior |
| **70442** | Miramonte sauna | 300 x 300 x 210 | 13.5 kW 230/400V 3~ | Touchscreen / Exterior |

| **Accessories** | Code | Unit | Weight kg Standard | Volume in $m^3$ Standard |
|---|---|---|---|---|
| Stainless steel accessories set | **70443** | un. | - | - |
| Set of decorative salt elements | **70444** | un. | - | - |
| Outside wall finished with vertical timber panels | **70447** | metre length | - | - |
| Stone-based decorative wall protection | **70456** | un. | - | - |
| Remote control kit for RGB colours | **70457** | un. | - | - |



The Classic sauna can be made to order in the following woods: white pine, thermo Aspen, Canadian spruce and red cedar.

Optional: glass panel follow-on from door.

## Classic Select sauna

The Classic sauna is designed with vertical panels and spruce wood flooring. It has a timber-framed glass door, two seats with a backrest against the wall and an abachi headrest. Includes: Wooden accessories kit, ergonomic seating, rounded backrest, heater with premium protection.

| Code | Type | Dimensions (cm) | Heating (kW) | Control unit |
|---|---|---|---|---|
| **70431** | Classic sauna | 150 x 150 x 210 | 4.5kW 230/400 3~ | Exterior |
| **70432** | Classic sauna | 200 x 150 x 210 | 6kW 230/400 3~ | Exterior |
| **70433** | Classic sauna | 200 x 200 x 210 | 6kW 230/400 3~ | Exterior |
| **70455** | Classic sauna | 250 x 200 x 210 | 8kW 230/400 3~ | Exterior |
| **70434** | Classic sauna | 250 x 250 x 210 | 9kW 230/400 3~ | Exterior |
| **70436** | Classic sauna | 300 x 250 x 210 | 10.5kW 230/400 3~ | Exterior |
| **70437** | Classic sauna | 300 x 300 x 210 | 13.5kW 230/400 3~ | Exterior |
| **70438** | Classic sauna | 400 x 300 x 210 | 16.5kW 230/400 3~ | Exterior |

| **Accessories** | Code | Unit | Weight kg Standard | Volume in $m^3$ Standard |
|---|---|---|---|---|
| Stainless steel accessories set | **70443** | un. | - | - |
| Set of decorative salt elements | **70444** | un. | - | - |
| Remote control kit for RGB LED colours | **70445** | un. | - | - |
| Touchscreen control unit for sauna heater | **70446** | un. | - | - |
| Outside wall finished with vertical timber panels | **70447** | metre length | - | - |
| Roof extension | **70448** | $m^2$ | - | - |
| Tinted/transparent glass window | **70449** | $m^2$ | - | - |
| Concealed heater for sauna up to 300 x 250 cm | **70450** | un. | - | - |
| Concealed heater for sauna more than 300 x 250 cm | **70451** | un. | - | - |
| Extra wall for concealed heater | **70452** | metre length | - | - |
| Aroma dosing system | **70453** | un. | - | - |

## SAUNAS



The St. Moritz sauna can be made to order in the following woods:
- Standard wood: Hemlock Playwood
- Bench wood: Abichi



### St. Moritz sauna

New

- Hemlock playwood panels 14 mm.
- Console benches and backrest of Abichi 21 mm.
- Secured transparent glass 8 mm.
- Wall mounted Harvia sauna heater.
- Outfoor touch control panel.
- Led light Warm White 3000 K.

| Type | Size | Light | Control Unit | Heater |
|---|---|---|---|---|
| **St. Moritz** | 180 x 180 x 210 | Led White / RGB | Touchscreen Exterior | 6 kW 230 / 400 3~ |
| **St. Moritz** | 220 x 220 x 210 | Led White / RGB | Touchscreen Exterior | 8 kW 230 / 400 3~ |
| **St. Moritz** | 260 x 260 x 210 | Led White / RGB | Touchscreen Exterior | 9 kW 230 / 400 3~ |
| **St. Moritz** | 300 x 250 x 210 | Led White / RGB | Touchscreen Exterior | 10.5 kW 230 / 400 3~ |

| Accessories | Code | Standard Pack | Standard Weight in kg | Standard Volume in $m^3$ |
|---|---|---|---|---|
| Stainless steel accessories set | **70443** | un. | - | - |
| RGB Led lighting kit with remote control | **70445** | un. | - | - |
| Salt decorative elements set | **70444** | lin.m | - | - |
| Hidden heater | **70450** | un. | - | - |
| Additional Wall for hidden heater | **70452** | lin.m | - | - |



The Innsbruck sauna can be made to order in the following woods:
- Standard wood: Hemlock Playwood
- Bench wood: Abichi



### Innsbruck sauna

New

- Hemlock playwood panels 14 mm.
- Ergonomic benches and backrest of Abichi 21 mm.
- Secured transparent glass 8 mm.
- Wall mounted Harvia sauna heater.
- Outfoor touch control panel.
- Led light Warm White 3000 K.
- Ceiling led light with optional chromotherapy.

| Type | Size | Light | Control Unit | Heater |
|---|---|---|---|---|
| **Innsbruck** | 180 x 180 x 210 | Led White / RGB | Touchscreen Exterior | 6 kW 230 / 400 3~ |
| **Innsbruck** | 220 x 220 x 210 | Led White / RGB | Touchscreen Exterior | 8 kW 230 / 400 3~ |
| **Innsbruck** | 260 x 260 x 210 | Led White / RGB | Touchscreen Exterior | 9 kW 230 / 400 3~ |
| **Innsbruck** | 300 x 250 x 210 | Led White / RGB | Touchscreen Exterior | 10.5 kW 230 / 400 3~ |

| Accessories | Code | Unit | Weight kg Standard | Volume in $m^3$ Standard |
|---|---|---|---|---|
| Stainless steel accessories set | **70443** | un. | - | - |
| RGB Led lighting kit with remote control | **70445** | un. | - | - |
| Outside Wall finished with vertical playwood panels | **To consult** | lin.m | - | - |
| Salt decorative elements set | **To consult** | un. | - | - |
| Hidden heater | **To consult** | un. | - | - |
| Additional Wall for hidden heater | **To consult** | lin.m | | |

## SAUNAS



The Bella sauna can be made to order in the following woods:
- Standard wood: Hemlock Playwood
- Bench wood: Thermo Aspen



### Bella sauna

New

- Hemlock playwood panels 14 mm.
- Curved decorative elements of Thermo Aspen 21 mm.
- Benches of thermos Aspen 21 mm.
- Secured transparent glass 8 mm.
- Harvia design sauna heater.
- Outdoor touch control panel.
- Aromatherapy/Salt Metal Bowl.
- Led light warm white 3000 K.
- Option for glass ceiling.

| Type | Size | Light | Control Unit | Heater |
|---|---|---|---|---|
| **Bella Sauna** | 180 x 180 x 210 | Led White / RGB | Touchscreen Exterior | 6.9 kW 230 / 400 3~ |
| **Bella Sauna** | 230 x 180 x 210 | Led White / RGB | Touchscreen Exterior | 6.9 kW 230 / 400 3~ |
| **Bella Sauna** | 230 x 230 x 210 | Led White / RGB | Touchscreen Exterior | 10.5 kW 230 / 400 3~ |
| **Bella Sauna** | 280 x 230 x 210 | Led White / RGB | Touchscreen Exterior | 10.5 kW 230 / 400 3~ |

| Accessories | Code | Standard Pack | Standard Weight in kg | Standard Volume in $m^3$ |
|---|---|---|---|---|
| Stainless steel accessories set | **70443** | un. | - | - |
| RGB Led lighting kit with remote control | **70445** | un. | - | - |
| Outside wall finished with vertical playwood panels | **To consult** | lin.m | - | - |
| Glass roof panel | **To consult** | sq.m | - | - |
| Heater safety railing | **To consult** | un. | - | - |



The Lobos sauna can be made to order in the following woods:
- Standard wood: Hemlock Playwood
- Bench wood: Abichi

### Lobos sauna

New

- Hemlock playwood panels 14 mm.
- Benches of Abachi 21 mm.
- Secured transparent glass 8 mm.
- Exclusive Harvia sauna heater.
- Outfoor touch control panel.
- Led light Warm White 3000 K.

| Type | Size | Light | Control Unit | Heater |
|---|---|---|---|---|
| **Lobos** | 134 x 254 x 210 | Led White / RGB | Touchscreen Exterior | 6 kW 230 / 400 3~ |
| **Lobos** | 194 x 195 x 210 | Led White / RGB | Touchscreen Exterior | 8 kW 230 / 400 3~ |
| **Lobos** | 254 x 254 x 210 | Led White / RGB | Touchscreen Exterior | 9 kW 230 / 400 3~ |

| Accessories | Code | Standard Pack | Standard Weight in kg | Standard Volume in $m^3$ |
|---|---|---|---|---|
| Stainless steel accessories set | **70443** | un. | - | - |
| Salt decorative elements set | **70444** | un. | - | - |
| Remote control kit for RGB LED colours | **70445** | un. | - | - |
| Outside wall finished with vertical timber panels | **70447** | lin.m | - | - |
| Roof extension | **70448** | sq.m | - | - |
| Tintes/transparent glass window | **70449** | sq.m | - | - |

## ACCESSORIES - SAUNAS

### Sauna accessories

| Code | Accessory type | Measure | CLASSIC | MIRAMONTE | INNSBRUCK | ST.MORITZ | LOBOS | BELLA |
|---|---|---|---|---|---|---|---|---|
| **70443** | Stainless steel sauna accessories set | un. | optional | optional | optional | optional | optional | optional |
| **70444** | Salt decorative elements set | un. | optional | optional | optional | optional | optional | N/A |
| **70445** | RGB Led lighting kit with remote control | un. | optional | optional | optional | optional | optional | optional |
| **70446** | Touchscreen control unit for sauna heater | un. | optional | Standard | Standard | Standard | Standard | Standard |
| **70447** | Outside wall finished with vertical timber panels | lin.m. | optional | optional | optional | optional | optional | optional |
| **70448** | Roof extension | sq.m. | optional | optional | optional | optional | optional | optional |
| **70449** | Tintes / transparent glass window | sq.m. | optional | optional | optional | optional | optional | optional |
| **70450** | Concealed heater for sauna up to 300 x 250 cm | un. | optional | optional | optional | optional | optional | N/A |
| **70451** | Concealed heater for sauna more than 300 x 250 cm | un. | optional | optional | optional | optional | optional | N/A |
| **70452** | Additional wall for hidden heater | lin.m. | optional | optional | optional | optional | optional | N/A |
| **70453** | Aroma dosing system | un. | optional | optional | optional | optional | optional | optional |
| **70456** | Decorative wall protection made of stones | un. | optional | optional | optional | optional | optional | N/A |
| **70457** | RGB Chromo therapy kit with remote control | un. | optional | optional | optional | optional | optional | N/A |
| **Request** | 2nd full glass side | sq.m. | N/A | N/A | N/A | N/A | optional | optional |
| **Request** | Glass roof panel | sq.m. | optional | optional | optional | optional | optional | optional |
| **Request** | Heater safety railing | un. | Standard | optional | Standard | Standard | Standard | optional |

Standard: Included with sauna code.
Optional: Additional code.
N/A: Not available.



**70443**



**70444**



**70446**



**70447**



**70450**
**70451**



**70453**



**70456**



**70457**



**2nd full glass side**



**Heater safety railing**

# ACCESSORIES - SAUNAS



## Harvia Helix steam generators

Includes control panel and temperature sensor.

| | Code | Standard Pack | Standard Weight in kg | Standard Volume in m³ |
|---|---|---|---|---|
| Steam generator Helix 4.5 kW | **61400** | 1 | - | - |
| Steam generator Harvia Helix 6 kW | **61401** | 1 | - | - |
| Steam generator Harvia Helix 9 kW | **61402** | 1 | - | - |
| Steam generator Harvia Helix 11 kW | **60327** | 1 | - | - |
| Steam generator Harvia Helix 15 kW | **61403** | 1 | - | - |

## Harvia Helix Pro steam generators

Includes control panel, temperature sensor, automatic discharge valve and fragrance pump.

| | Code | Standard Pack | Standard Weight in kg | Standard Volume in m³ |
|---|---|---|---|---|
| Steam generator Harvia Helix Pro 22 kW | **61404** | 1 | - | - |
| Steam generator Harvia Helix Pro 30 kW | **61405** | 1 | - | - |
| Auto Clean Valve Harvia | **60328** | 1 | - | - |



## Steam Pack

New

The new generation of Steam room equipment. Single unit with metal structure. Compact design. Easy and simple installation.

| Description | Heating (kW) |
|---|---|
| Steam pack for room 2-5 m³ | 4.5 kW 230/400V 3~ |
| Steam pack for room 3-8 m³ | 5.7 kW 230/400V 3~ |
| Steam pack for room 6-12 m³ | 9 kW 230/400V 3~ |
| Steam pack for room 10-15 m³ | 10.8 kW 230/400V 3~ |
| Steam pack for room 12-20 m³ | 15 kW 230/400V 3~ |
| Steam pack for room 20-29 m³ | 22 kW 230/400V 3~ |
| Steam pack for room 20-29 m³ | 30 kW 230/400V 3~ |



## Harvia Vega sauna heater

Stones included.

| | Code | Standard Pack | Standard Weight in kg | Standard Volume in m³ |
|---|---|---|---|---|
| Harvia Vega sauna heater 4.5 kW | **61387** | 1 | - | - |
| Harvia Vega sauna heater 4.5 kW E | **61388** | 1 | - | - |
| Harvia Vega sauna heater 6 kW | **61389** | 1 | - | - |
| Harvia Vega sauna heater 6 kW E | **61390** | 1 | - | - |
| Harvia Vega sauna heater 8 kW | **60323** | 1 | - | - |
| Harvia Vega sauna heater 8 kW E | **60325** | 1 | - | - |
| Harvia Vega sauna heater 9 kW | **60324** | 1 | - | - |
| Harvia Vega sauna heater 9 kW E | **60326** | 1 | - | - |

## ACCESSORIES - SAUNAS



### Xenio Control

New

Harvia Xenio is a control unit with a touch control panel. Xenio provides a modern and subtly stylish user interface for controlling the heart of the sauna, the heater. The stylishly small yet clear touch control panel is easy to install where you want it: in the sauna, the shower room, the dressing room, or even the living room. The control panel enables you to see with just one look when your sauna is at the right temperature for you.

- **XENIO 110 máx. for 11kW electric heathers**
- **XENIO 170 for up to 17 kW heaters**





# HEATING AND DEHUMIDIFICATION


396 • Swimming pool heating solutions
400 • Air-water heat pumps for outdoor installation
405 • Air-water heat pumps for indoor installation
407 • Water-air chillers for indoor or outdoor installation
408 • Electric heaters
409 • Water-water exchanger
412 • Dehumidifiers


**New app:**

## AstralPool Toolbox

Download this new app to check which heat pump and dehumidifier best adapt to your pool.

## SWIMMING POOL HEATING SOLUTIONS

Equipping a pool with a heating solution means freedom from the vagaries of the weather and extending its use period. Heat pumps, electric heaters, heat exchangers - the AstralPool® product range allows everyone to enjoy water at a constant ideal temperature.

### Parameters for choosing a heating system

To define a system suitable for a pool, you need to know its volume (in $m^3$), the desired use period and estimate the temperature (in °C) the water in the pool should reach.

These simple parameters will enable you to size the heating system correctly and will guarantee you maximum comfort at a lower cost.

The choice of heating equipment also depends on the energy source that will be used.

COMPARATIVE TABLE OF RANGES

| | Heat pumps | Electric heaters | Heat exchangers |
|---|---|---|---|
| |  |  |  |
| **SOLUTION** | Stand-alone, dedicated to the pool | Stand-alone, dedicated to the pool | Coupled to the domestic heating |
| **ENERGY USED** | Renewable | Electricity | Domestic heating source (gas, oil, electricity, renewable, etc.) |
| **RUNNING COST** | € | €€€ | € to €€€ |
| **INVESTMENT** | €€ | € | € |
| **ADVANTAGES** | Economical<br>Efficient | Simple installation<br>Rapid temperature increase | Rapid temperature increase (if gas/oil boiler)<br>Compatible with all heating systems |
| **USES** | All open air or indoor pools | Spas and pools used at weekends or holiday homes | Indoor and outdoor pools close to the boiler in the house |

### What type of defrosting?

When the outside temperature is low, the evaporator will tend to ice up, which reduces its efficiency: this ice must therefore be removed. There are 2 types of defrosting:

- **Defrosting by ventilation or economical defrosting**

  The cooling circuit is stopped for a few minutes. Only the fan operates, forcing outside air to defrost naturally.
  This type of defrosting is suitable and adequate for all open air pools (seasonal use).

- **Defrosting by cycle inversion or intensive defrosting**

  The cooling circuit is reversed: heat from the water in the pool is taken to defrost the evaporator. This allows operation at low temperatures.

**A SIZING SERVICE AVAILABLE TO HELP YOU**

Visit the AstralPool configurator on our website: **www.astralpool.com**.

## SWIMMING POOL HEATING SOLUTIONS

### How is the performance of heat pumps compared?

To compare the performance of different heat pumps, it is essential to compare power supplied and performance coefficient.
Two main values characterise the performance of heat pumps: their power and their performance coefficient.

- **Power**, expressed in kW, indicates the quantity of heat transferred to the water.

  It varies depending on three conditions to which the heat pump is exposed during use: temperature of the outside air, humidity of the outside air and temperature of the water in the pool.

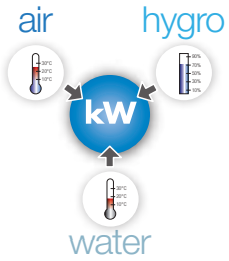


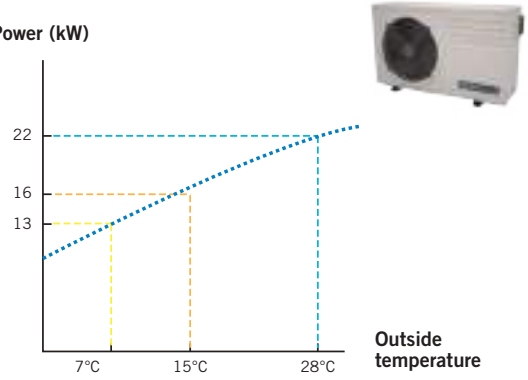


- **The coefficient of performance (COP)** is the ratio between the power supplied to the water in the pool and the power consumption of the heat pump.

  As an example, a performance coefficient of 4 means that for 1 kWh consumed at the electricity meter, the heat supplies 4 times more energy to the water in the pool, or 4 kWh.

  So the higher the performance coefficient, the more efficient the system.

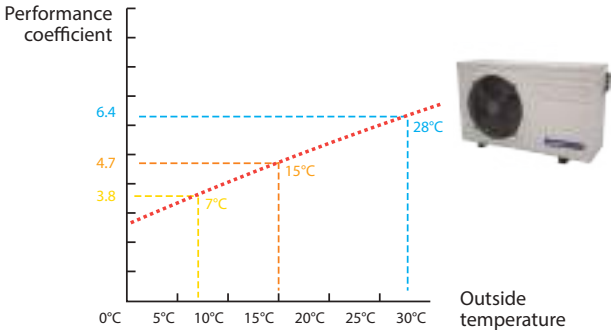


### Recommendations for installing a swimming pool heat pump

A heat pump system includes 'moving' parts (compressor, fan, etc.), vibrations from which can spread and build up.

To avoid or reduce disturbances, a few installation rules should be followed:

- Favour open spaces (avoid corners or interior courtyards), because sound waves coming from all sides of the system are reflected by the surfaces facing them.
- Do not install the system below or facing a window.
- Relative to neighbouring properties:
  - Install the system as far as possible from property boundaries.
  - The fan should not point towards neighbouring properties.



# SWIMMING POOL HEATING SOLUTIONS

## Full Inverter technology

Inverter technology enables a heat pump to change its power mode depending on the temperature of the pool water and the weather conditions. It therefore runs to achieve the best energy efficiency at the lowest noise level.

**3 operating modes:**

***1. Silent:*** **Ideal to maintain the temperature or at night time**
- Heat Pump runs at low power setting
- Compressor operates on low speed ranges to minimize energy consumption
- Lowest noise and highest COP

***2. Smart:*** **Normal use**
- Compressor operates smartly from low to high speed ranges
- Reduced noise and energy consumption

***3. Powerful:*** **Ideal to begin the season or to operate in cold conditions**
- Heat Pump runs at high power setting
- Compressor operates on high speed ranges to heat the pool faster
- Maximum heating power

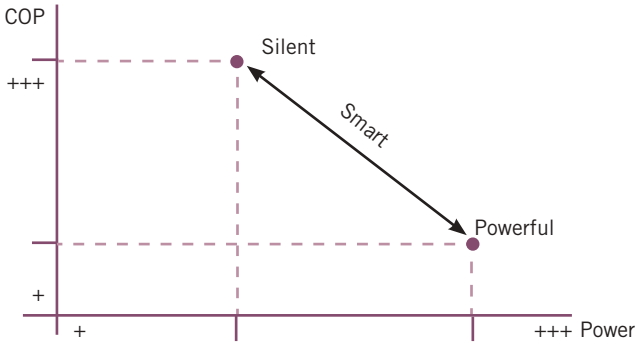


## Vertical blowing

Vertical air blowing is typically suitable for small spaces as a reduced free area is required around the unit.

## Automatic heat / cool mode

The heat pump will switch automatically from heat to cool mode to stabilize the temperature at the desired target.

## Soft starter

When no inverter, for high power units, the soft starter will prevent peak currents when the Heat Pump starts, thus avoiding the main fuse/breaker to trip and ensuring the viability of components.

## SWIMMING POOL HEATING SOLUTIONS

### Heat pumps

Heat pumps offer a solution that is both ecological and easy to install, all with highly competitive running costs.
As thermodynamic devices, they transfer the calories (heat) present in the air to the pool water, for reduced energy consumption.
Ideal for in-ground pools, the AstralPool® range is available in several models to suit all types of pool.

**Heat Pumps for private pools and public pools.**

COMPARATIVE TABLE OF HEAT PUMPS

| | EVOLINE | APH3 | PROELYO | PROHEAT II: STANDARD & CHILLER | PROHEAT II: INDOOR | MAYA | OPTIMA | ALASKA SIBERIA |
|---|---|---|---|---|---|---|---|---|
| |  |  |  |  |  |  |  |  |
| **Application** | Residential | Residential | Residential | Large public pools | Large public pools | Residential | Residential | Residential |
| **Energy efficiency** | ++ | +++ | +++ | ++ | ++ | ++ | ++ | ++ |
| **Acoustics** | ++ | +++ | +++ | ++ | ++ | ++ | ++ | ++ |
| **Compact size** | ++ | +++ | ++ | ++ | + | ++ | + | ++ |
| **Minimum operating T°** | 0°C | -20°C | -20°C | 0°C | 0°C | 5°C | 5°C | 5°C |
| **Reversible operation to cool the pool** | • | • | • | • (Chiller models) | | | | These machines are chillers. It's the only valid operation mode |
| **Heating priority (filtration pump control)** | • | • | • | • | • | • | • | • |
| **Can be installed in a control room*** | | | | | • | • | | • (Siberia models only) |

* With appropriate kit.

+ info
Further information on **PRODUCTS**
www.astralpool.com

# AIR-WATER HEAT PUMPS FOR OUTDOOR INSTALLATION





## AstralPool Heat 3

- **Full inverter technology:** silent and energy saving.
- **Vertical air blowing** for increased comfort.
- **-20°C** lowest outdoor air working temperature.

**Technical features:**

- Detachable display.
- Digital touchscreen.
- Heating priority mode (filtration pump control).
- ABS plastic housing.
- DC, variable speed fan (automatic or manual).
- Automatic cooling mode.
- Automatic defrosting.
- HP & LP safety pressure switch.
- Water flow switch.
- Titanium water exchanger condenser.
- Inverter Rotary compressor.
- Electronic expansion valve.

**Accessories included:**

- 1 x Winter Cover.
- 4 x Anti-vibration feet.
- 3 x Water nozzles.
- 1 x 4-way connection.
- 4 x Drain hoses.
- 1 x 10m Signal wire (to connect the screen remotely).
- 1 x screen waterproof box (to replace the remote screen on the Heat Pump).
- 1 x 10m Modbus Signal wire (to connect the Heat Pump to the Connect Box).
- 2 x PVC fittings Ø 50.

*Fluidra Connect compatible*

*AstralPool Toolbox app for IOS and Android*

| TECHNICAL FEATURES | | | | | | |
|---|---|---|---|---|---|---|
| | **MODELS** | | 14 kW | 17 kW | 21 kW | 26 kW |
| | **CODES** | | 68837 | 68838 | 68839 | 68840 |
| **INDICATIVE POOL VOLUME** [1] | | $m^3$ | ≤ 66 | ≤ 86 | ≤ 122 | ≤ 135 |
| **REFRIGERANT FLUID** | | | R32 | R32 | R32 | R32 |
| **AVERAGE WATER FLOW** | | $m^3/h$ | 4 | 5 | 6 | 8 |
| **HYDRAULIC CONNECTION** | | mm | Ø 50 | | | |
| **ELECTRIC POWER SUPPLY** | | V/Ph/Hz | 220~240V/ 50Hz or 60Hz/1PH | | | |
| **RATED CURRENT** | | A | 8.1 | 9.8 | 12 | 16 |
| **MAXIMUM OPERATING CURRENT** | | A | 11.5 | 14 | 17 | 22.5 |
| **RECOMMENDED POWER CABLE SECTION** [2] | | | 3x2.5 | | 3x4 | |
| **REFRIGERANT FLUID QUANTITY** | | Kg | 1.4 | 1.8 | | 2.6 |
| **ACOUSTIC PRESSURE (L) AT 1M HEATING MODE** | | dB(A) | 40-54 | 41-56 | | 42-60 |
| **NET WEIGHT** | | Kg | 70 | 75 | 92 | 111 |
| **NET DIMENSION (WxDxH)** | | mm | 820*695*830 | | 950*900*1025 | |
| **HEATING PERFORMANCE** [3] [4] | | | | | | |
| **PERFORMANCE AT AIR 28°C. WATER 28°C. HUMIDITY 80%** | **HEATING CAPACITY** | kW | 3 - 14 | 3.6 - 17 | 4.6 - 21 | 6 - 26 |
| | **POWER CONSUMPTION** | kW | 0.2 - 2.1 | 0.3 - 2.5 | 0.4 - 3.1 | 0.5 - 3.9 |
| | **C.O.P** | | 13 - 6.7 | | | |
| **PERFORMANCE AT AIR 15°C. WATER 26°C. HUMIDITY 70%** | **HEATING CAPACITY** | kW | 2.1 - 9.6 | 2.5 - 11.5 | 3.2 - 14.3 | 4.2 - 18.5 |
| | **POWER CONSUMPTION** | kW | 0.2 - 1.9 | 0.3 - 2.3 | 0.4 - 2.9 | 0.5 - 3.6 |
| | **C.O.P** | | 8.5 - 5.1 | | | |

[1] Estimated average values for a private pool with isothermal cover. from 15 May to 15 September. For an accurrate sizing. please consult our configurator AstralPool.
[2] For a maximum length of 20 meters.
[3] Power, expressed in kW, indicates the quantity of heat transferred to the water. It varies depending on 3 conditions: temperature of the outside air, humidity of the outside air and temperature of the water in the pool. To compare the performances of different heat pumps, it is a must to compare Power and COP under the same conditions.
[4] Value with Min-Max compressor speed.

## AIR-WATER HEAT PUMPS FOR OUTDOOR INSTALLATION



### Pro Elyo Inverboost NN

- **Full inverter technology:** silent and energy saving.
- **8 power levels** from 7 kW to 35 kW*.
- **- 20°C** lowest outdoor air working temperature.

*Temperature conditions of 28°C Air / 28°C Water / 80% Humidity.

**Technical features:**

- Detachable display.
- Digital touchscreen.
- Heating priority mode (filtration pump control).
- ABS plastic housing.
- DC, variable speed fan (automatic or manual).
- Automatic cooling mode.
- Automatic defrosting.
- HP & LP safety pressure switch.
- Water flow switch.
- Titanium water exchanger condenser.
- Inverter Rotary compressor.
- Electronic expansion valve.

**Accessories included:**

- 1 x Winter Cover.
- 4 x Anti-vibration feet.
- 3 x Water nozzles.
- 1 x 4-way connection.
- 4 x Drain hoses.
- 1 x 10m Signal wire (to connect the screen remotely).
- 1 x screen waterproof box (to replace the remote screen on the Heat Pump).
- 1 x 10m Modbus Signal wire (to connect the Heat Pump to the Connect Box).
- 2 x PVC fittings ø 50.

*Fluidra Connect compatible*

*AstralPool Toolbox app for IOS and Android*

| TECHNICAL FEATURES | | | | | | | | | | | |
|---|---|---|---|---|---|---|---|---|---|---|---|
| | MODELS | | 7 kW | 9 kW | 11 kW | 14 kW | 16 kW | 20 kW | 26 kW | 26 kW T | 35 kW | 35 kW T |
| | CODES | | 71676 | 71677 | 71678 | 71679 | 71680 | 71681 | 71682 | 68821 | 68822 | 68823 |
| INDICATIVE POOL VOLUME [1] | | $m^3$ | ≤ 26 | ≤ 35 | ≤ 60 | ≤ 66 | ≤ 85 | ≤ 120 | ≤ 132 | ≤ 135 | ≤ 160 | ≤ 160 |
| REFRIGERANT FLUID | | | R32 | | | | | | | R410A | | |
| AVERAGE WATER FLOW | | $m^3/h$ | 2.5 | 3 | 3.7 | 4 | 5 | 6 | 8 | | 12 | |
| HYDRAULIC CONNECTION | | mm | Ø 50 | | | | | | | | | |
| ELECTRIC POWER SUPPLY | | V/Ph/Hz | 220*240V/ 50Hz or 60Hz/ 1PH | | | | | | | 380V/ 50Hz or 60Hz/ 3PH | 220*240V/ 50Hz or 60Hz/ 1PH | 380V/ 50Hz or 60Hz/ 3PH |
| RATED CURRENT | | A | 4.6 | 5.9 | 7.2 | 9.2 | 10.5 | 13.2 | 17 | 6.2 | 22.9 | 8.4 |
| MAXIMUM OPERATING CURRENT | | A | 6.5 | 8 | 10 | 13 | 15 | 18.5 | 23.5 | 9 | 32 | 11.5 |
| RECOMMENDED POWER CABLE SECTION [2] | | | 3x1.5 | | 3x2.5 | | | 3x4 | | 5x2.5 | 3x6 | 5x4 |
| REFRIGERANT FLUID QUANTITY | | Kg | 0.65 | 0.7 | 0.75 | 1.1 | 1.5 | 1.9 | 2 | 3.8 | 4 | |
| ACOUSTIC PRESSURE (Lp) AT 1M HEATING MODE | | dB(A) | 38-51 | 39-52 | 40-52 | 40-54 | | 41-56 | 42-60 | | | |
| NET WEIGHT | | Kg | 56 | 68 | 73 | 78 | 98 | 117 | 128 | | 130 | |
| NET DIMENSION (WxDxH) | | mm | 1008*380*577 | 1050*440*709 | | | 1050*450*870 | | 1050*452*1295 | 1050*460*1285 | | |
| NUMBER OF FAN | | units | 1 | | | | | | 2 | | | |
| HEATING PERFORMANCE [3] [4] | | | | | | | | | | | | |
| PERFORMANCE AT AIR 28°C. WATER 28°C. HUMIDITY 80% | HEATING CAPACITY | kW | 2.1 - 7 | 2.3 - 9 | 2.9 - 11 | 3.2 - 14 | 3.8 - 16 | 4.7 - 20 | 5.9 - 26 | | 8 - 35 | |
| | POWER CONSUMPTION | kW | 0.2 - 1 | 0.2 - 1.3 | 0.2 - 1.6 | 0.3 - 2.1 | 0.4 - 2.4 | 0.4 - 3 | 0.5 - 3.9 | | 0.6 - 5.2 | |
| | C.O.P | | 13 - 6.7 | | | | | | | | | |
| PERFORMANCE AT AIR 15°C. WATER 26°C. HUMIDITY 70% | HEATING CAPACITY | kW | 1.5 - 4.7 | 1.6 - 6.6 | 2 - 7.9 | 2.3 - 9.5 | 2.7 - 11.2 | 3.3 - 14 | 4.1 - 18.2 | | 5.6 - 24.5 | |
| | POWER CONSUMPTION | kW | 0.2 - 0.9 | 0.2 - 1.3 | 0.2 - 1.6 | 0.3 - 1.9 | 0.4 - 2.2 | 0.4 - 2.8 | 0.5 - 3.6 | | 0.6 - 4.9 | |
| | C.O.P | | 8.5 - 5 | | | | | | | | | |

[1] Estimated average values for a private pool with isothermal cover. from 15 May to 15 September. For an accurrate sizing. please consult our configurator AstralPool.
[2] For a maximum length of 20 meters.
[3] Power, expressed in kW, indicates the quantity of heat transferred to the water. It varies depending on 3 conditions: temperature of the outside air, humidity of the outside air and temperature of the water in the pool. To compare the performances of different heat pumps, it is a must to compare Power and COP under the same conditions.
[4] Value with Min-Max compressor speed.

+ info
Further information on PRODUCTS
www.astralpool.com

# AIR-WATER HEAT PUMPS FOR OUTDOOR INSTALLATION



## Evoline NN

- 8 power levels from 4.5 kW to 32.3 kW*.
- Smooth and quiet performance down to 0°C outdoor air temperature.
- Heating and Cooling regulation.

*Temperature conditions of 28°C Air / 28°C Water

R32

R410A

**Technical features:**

- Detachable display.
- Heating priority mode (filtration pump control).
- ABS plastic housing.
- AC fan.
- Automatic cooling mode.
- Automatic defrosting.
- HP & LP safety pressure switch.
- Water flow switch.
- Titanium water exchanger condenser.
- Scroll compressor.
- Electronic expansion valve.

COMPATIBLE NN thing

*Fluidra Connect compatible*

TOOL BOX

*AstralPool Toolbox app for IOS and Android*

**Accessories included:**

- 1 x Winter Cover.
- 4 x Adjustable anti-vibration feet.
- 2 x Water nozzles.
- 1 x inlet/outlet position instruction.
- 1 x 10m Signal wire (to connect the screen remotely).
- 1 x screen waterproof box (to replace the remote screen on the Heat Pump).
- 1 x plate cover to support the display on the wall.
- 2 x PVC fittings ø 1.5 inch.

**TECHNICAL FEATURES**

| | | MODELS | EVOLINE 6M | EVOLINE 10M | EVOLINE 13M | EVOLINE 15M | EVOLINE 17M | EVOLINE 20M | EVOLINE 20T | EVOLINE 25M | EVOLINE 25T | EVOLINE 35T |
|---|---|---|---|---|---|---|---|---|---|---|---|---|
| | | CODES | 66069-R32 | 66070-R32 | 66071-R32 | 66072-R32 | 67405-R32 | 66073-MOB | 66073-R32 | 66074M-MOB | 66074-R32 | 66075-MOB |
| INDICATIVE POOL VOLUME (1) | | $m^3$ | ≤ 15 | ≤ 26 | ≤ 50 | ≤ 60 | ≤ 70 | ≤ 90 | ≤ 90 | ≤ 120 | ≤ 120 | ≤ 150 |
| REFRIGERANT FLUID | | | R32 | | | | | R410A | R32 | R410A | R32 | R410A |
| AVERAGE WATER FLOW | | $m^3/h$ | - | | | | | | | | | |
| HYDRAULIC CONNECTION | | inch | Ø 1.5 inch | | | | | | | | | |
| ELECTRIC POWER SUPPLY | | V/Ph/Hz | 220~240/1/50 | | | | | | 380/3/50 | 220~240/1/50 | 380/3/50 | |
| RATED CURRENT | | A | 4.1 | 6.2 | 8.9 | 9.7 | 11 | 15.9 | 5.1 | 16.8 | 5.6 | 10.1 |
| MAXIMUM OPERATING CURRENT | | A | 5.3 | 8 | 11.6 | 12.6 | 14.2 | 23.9 | 6.7 | 25.2 | 7.3 | 15.2 |
| RECOMMENDED POWER CABLE SECTION (2) | | | 3*1.5 | 3*2.5 | | | | 3*4 | 5*2.5 | 3*4 | 5*2.5 | 5*4 |
| REFRIGERANT FLUID QUANTITY | | Kg | 0.4 | 0.8 | 0.9 | 1.1 | 1.15 | 1.7 | 1.25 | 2.3 | 1.2 | 2.6 |
| ACOUSTIC PRESSURE (Lp) AT 1M HEATING MODE | | dB(A) | <55 | <52 | | <56 | <51 | <56 | <59 | <56 | <60 | <57 |
| NET WEIGHT | | Kg | 33 | 48 | 54 | 60 | 68 | 91 | | 99 | 103 | 120 |
| NET DIMENSION (WxDxH) | | mm | 798x293x511 | 958x360x581 | 1015x370x621 | | 1080x416x708 | | | 1078x446x958 | | 1078x446x1258 |
| NUMBER OF FAN | | units | 1 | | | | | | | | | 2 |
| HEATING PERFORMANCE (3) | | | | | | | | | | | | |
| PERFORMANCE AT AIR 28°C, WATER 28°C, HUMIDITY 70% | HEATING CAPACITY | kW | 4.7 | 7.4 | 10.4 | 11.6 | 14.9 | 17.6 | 18.5 | 22.7 | 22.3 | 32.3 |
| | POWER CONSUMPTION | kW | 0.9 | 1.3 | 1.9 | 2.1 | 2.4 | 3.2 | 3.0 | 3.6 | 3.2 | 5.6 |
| | C.O.P | | 5.4 | 5.6 | 5.4 | 5.6 | 6.3 | 5.4 | 6.3 | 6.4 | 6.9 | 5.8 |
| PERFORMANCE AT AIR 15°C, WATER 26°C, HUMIDITY 70% | HEATING CAPACITY | kW | 3.2 | 5.5 | 7.6 | 8.4 | 10.7 | 12.4 | 13.4 | 16.3 | 16.1 | 23.4 |
| | POWER CONSUMPTION | kW | 0.8 | 1.2 | 1.7 | 1.9 | 2.2 | 3.1 | 2.9 | 3.5 | 3.2 | 5.1 |
| | C.O.P | | 4.0 | 4.7 | 4.5 | | 4.9 | 4.0 | 4.7 | | 5.0 | 4.6 |

(1) Estimated average values for a private pool with isothermal cover, from 15 May to 15 September. For an accurrate sizing, please consult our configurator AstralPool.
(2) For a maximum length of 20 meters.
(3) Power, expressed in kW, indicates the quantity of heat transferred to the water. It varies depending on 3 conditions: temperature of the outside air, humidity of the outside air and temperature of the water in the pool. To compare the performances of different heat pumps, it is a must to compare Power and COP under the same conditions.

# AIR-WATER HEAT PUMPS FOR OUTDOOR INSTALLATION



## Evoline NN

- Smooth and quiet performance down to 0°C outdoor air temperature.
- Heating and Cooling regulation.

R410A

**Technical features:**

- Detachable display.
- Heating priority mode (filtration pump control).
- ABS plastic housing.
- AC fan.
- Automatic cooling mode.
- Automatic defrosting.
- HP & LP safety pressure switch.
- Water flow switch.
- Titanium water exchanger condenser.
- Scroll compressor.
- Electronic expansion valve.

*Fluidra Connect compatible*

*AstralPool Toolbox app for IOS and Android*

**Accessories included:**

- 1 x Winter Cover.
- 4 x Adjustable anti-vibration feet.
- 2 x Water nozzles.
- 1 x inlet/outlet position instruction.
- 1 x 10m Signal wire (to connect the screen remotely).
- 1 x screen waterproof box (to replace the remote screen on the Heat Pump).
- 1 x plate cover to support the display on the wall.
- 2 x PVC fittings Ø 1.5 inch.

**TECHNICAL FEATURES**

| | | MODELS | EVOLINE 6M | EVOLINE 10M | EVOLINE 13M | EVOLINE 15M | EVOLINE 17M | EVOLINE 25T |
|---|---|---|---|---|---|---|---|---|
| | | CODES | 66069-M0B | 66070-M0B | 66071-M0B | 66072-M0B | 67405-M0B | 66074-M0B |
| INDICATIVE POOL VOLUME [1] | | $m^3$ | ≤ 20 | ≤ 40 | ≤ 50 | ≤ 60 | ≤ 70 | ≤ 120 |
| REFRIGERANT FLUID | | | R410A | | | | | |
| AVERAGE WATER FLOW | | $m^3/h$ | - | | | | | |
| HYDRAULIC CONNECTION | | inch | 1,5 | | | | | |
| ELECTRIC POWER SUPPLY | | V/Ph/Hz | 220~240/1/50 | | | | | 380/3/50 |
| RATED CURRENT | | A | 4.5 | 7.3 | 8.2 | 9.3 | 11.4 | 7.1 |
| MAXIMUM OPERATING CURRENT | | A | 6.75 | 10.95 | 12.3 | 14.25 | 17.10 | 10.65 |
| RECOMMENDED POWER CABLE SECTION [2] | | | 3*1.5 | 3*2.5 | | | | 5*2.5 |
| REFRIGERANT FLUID QUANTITY | | Kg | 0.55 | 1.1 | | 1.25 | 1.15 | 2.3 |
| ACOUSTIC PRESSURE (Lp) AT 1M HEATING MODE | | dB(A) | <50 | <53 | <54 | | <56 | |
| NET WEIGHT | | Kg | 33 | 48 | 55 | 60 | 69 | 99 |
| NET DIMENSION (WxDxH) | | mm | 778x293x511 | 938x360x581 | 1015x370x621 | | 1080x416x708 | 1078x416x958 |
| NUMBER OF FAN | | units | 1 | | | | | |
| HEATING PERFORMANCE [3] | | | | | | | | |
| PERFORMANCE AT AIR 24°C, WATER 26°C, HUMIDITY 70% | POWER CONSUMPTION | kW | 4.8 | 8.2 | 9.4 | 11.6 | 12.9 | 22.5 |
| | C.O.P | | 5 | 5.1 | 5.3 | 5.4 | 5.1 | 5.4 |
| PERFORMANCE AT AIR 15°C, WATER 26°C, HUMIDITY 70% | POWER CONSUMPTION | kW | 3.6 | 6.2 | 7.61 | 8.7 | 9.7 | 16.9 |
| | C.O.P | | 3.8 | 3.8 | 4 | 4.1 | 3.8 | 4.1 |

[1] Estimated average values for a private pool with isothermal cover, from 15 May to 15 September. For an accurrate sizing, please consult our configurator AstralPool.
[2] For a maximum length of 20 meters.
[3] Power, expressed in kW, indicates the quantity of heat transferred to the water. It varies depending on 3 conditions: temperature of the outside air, humidity of the outside air and temperature of the water in the pool. To compare the performances of different heat pumps, it is a must to compare Power and COP under the same conditions.

+ info
PDB
Further information on PRODUCTS
www.astralpool.com

# AIR-WATER HEAT PUMPS FOR OUTDOOR INSTALLATION





## ProHeat II

- 0°C minimum outdoor air temperature.
- 2 models: Standard and Chiller.
- Digital display.
- Heating priority mode (filtration pump control).
- Robust, lightweight casing made from corrosion-resistant magnesium coated aluminium.
- Axial ventilator.
- Automatic cooling mode for chiller model.
- Automatic defrosting.
- HP & LP safety pressure switch.
- Water flow switch.
- G2 Titanium water exchanger condensers. Guaranteed against corrosion.
- Scroll compressor.
- Thermostatic expansion valve, with external balancing unit.
- High performance evaporator battery in an inner corrugated copper tube with lacquered aluminium fins, especially for corrosive environments.
- Control of purifying system.
- Automatic electrical protections.

R410A

COMPATIBLE NN thing
*Fluidra Connect compatible*

TOOL BOX
*AstralPool Toolbox app for IOS and Android*

Web
Heat pump configurator:
www.astralpool.com -> Calculation tools

## TECHNICAL SPECIFICATIONS

| | | MODELS | PROHEAT II 35 | PROHEAT II 45 | PROHEAT II 60 | PROHEAT II 90 | PROHEAT II 120 |
|---|---|---|---|---|---|---|---|
| | | Code STANDARD | 65542-MOB | 65543-MOB | 65544-MOB | 65545-MOB | 65546-MOB |
| | | CHILLER | 68245-MOB | 68246-MOB | 68247-MOB | 68248-MOB | 68249-MOB |
| REFRIGERANT | | | R-410A | | | | |
| WATER FLOW RATE | | $m^3/h$ | 12-15 | 15-25 | 25-35 | 30-50 | 50-70 |
| Ø WATER CONNECTION | | mm | 63 | | 75 | | |
| REFRIGERANT GAS CHARGE | | kg | 4 | 6 | 9 | 2 x 6.5 | 2 x 9 |
| NUMBER OF FAN | | | 1 | | | 2 | |
| VOLTAGE | | V/Ph/Hz | 400/3/50 | | | | |
| SOUND LEVEL | | dbA (d*) | 66.2 | 66.2 | 72.5 | 71.1 | 71.1 |
| | | dbA (5 m) | 60.9 | 60.9 | 68.4 | 69.4 | 69.4 |
| 25°C Tª AIR 26°C Tª WATER | INPUT POWER | kW | 6.4 | 8.2 | 11.9 | 17.0 | 24.3 |
| | OUTPUT POWER | kW | 36.2 | 44.4 | 63.5 | 91.3 | 125.5 |
| | COP | | 5.7 | 5.4 | 5.3 | 5.4 | 5.2 |
| 15°C Tª AIR 26°C Tª WATER | INPUT POWER | kW | 6.2 | 8.1 | 11.5 | 16.8 | 23.9 |
| | OUTPUT POWER | kW | 30.5 | 39.7 | 56.8 | 80.2 | 110.5 |
| | COP | | 4.9 | 4.9 | 4.9 | 4.8 | 4.6 |
| 5°C Tª AIR 26°C Tª WATER | INPUT POWER | kW | 6.0 | 7.9 | 10.7 | 16.2 | 22.7 |
| | OUTPUT POWER | kW | 23.2 | 30.0 | 41.3 | 61.0 | 80.1 |
| | COP | | 3.9 | 3.8 | 3.9 | 3.8 | 3.5 |
| CHILLER MODE | | | | | | | |
| 30°C AIR TEMPERATURE 26°C WATER TEMPERATURE | INPUT POWER | kW | 7.0 | 8.4 | 12.0 | 17.3 | 24.4 |
| | OUTPUT POWER | kW | 42.3 | 51.0 | 72.0 | 104.0 | 140.0 |
| | EER | | 6.0 | 6.1 | 6.0 | 6.0 | 5.7 |
| 43°C AIR TEMPERATURE 32°C WATER TEMPERATURE | INPUT POWER | kW | 9.4 | 11.9 | 15.6 | 24.5 | 31.2 |
| | OUTPUT POWER | kW | 29.1 | 37.0 | 49.5 | 74.0 | 99.0 |
| | EER | | 3.1 | 3.1 | 3.2 | 3.0 | 3.2 |
| STANDARD AND CHILLER MODELS | | | | | | | |
| SIZE | | | | | | | |
|  | | A (mm) | 1000 | | 1700 | 2100 | 2400 |
| | | B (mm) | 950 | | 1200 | | |
| | | C (mm) | 1140 | | 1200 | 1500 | 1700 |
| NET WEIGHT | | kg | 185 | 210 | 287 | 447 | 500 |

NOTE: d* = As per UNE-EN 12102/ISO 3744:2010.

# AIR-WATER HEAT PUMPS FOR INDOOR INSTALLATION



## ProHeat II

- 0°C minimum outdoor air temperature.
- Digital display, easy-to-use control panel, with display of current temperature, setpoint and alarm messages.
- Heating priority mode (filtration pump control).
- Robust, lightweight casing made from corrosion-resistant magnesium coated aluminium.
- Axial ventilator.
- Automatic cooling mode (chiller model).
- Automatic defrosting.
- HP & LP safety pressure switch.
- Water flow switch.
- G2 Titanium water exchanger condensers. Guaranteed against corrosion.
- Scroll compressor.
- Thermostatic expansion valve, with external balancing unit.
- High performance evaporator battery in an inner corrugated copper tube with lacquered aluminium fins, especially for corrosive environments.
- Control of purifying system.
- Automatic electrical protections.
- Centrifugal fans so the unit will be installed in a technical room, using air ducting.

R410A

COMPATIBLE NN thing

*Fluidra Connect compatible*

TOOL BOX

*AstralPool Toolbox app for IOS and Android*

**Web**
Heat pump configurator:
www.astralpool.com -> Calculation tools

**TECHNICAL SPECIFICATIONS**

| | | MODELS | PROHEAT II IND-35 | PROHEAT II IND-45 | PROHEAT II IND-60 | PROHEAT II IND-90 | PROHEAT II IND-120 |
|---|---|---|---|---|---|---|---|
| | | CODE | 69649-MOB | 69650-MOB | 69651-MOB | 69652-MOB | 69653-MOB |
| REFRIGERANT | | | R-410A | | | | |
| WATER FLOW RATE | | $m^3/h$ | 12-15 | 15-25 | 25-35 | 30-50 | 50-70 |
| Ø WATER CONNECTION | | mm | 63 | | 75 | | |
| REFRIGERANT GAS CHARGE | | kg | 6 | 9 | 12 | 2 x 7 | 2 x 9 |
| NUMBER OF FAN | | | 1 | | | 2 | |
| VOLTAGE | | V/Ph/Hz | 400/3/50 | | | | |
| SOUND LEVEL | | dbA (d*) | 59.2 | 59.6 | 60.0 | 61.1 | 61.5 |
| | | dbA (5 m) | 55.4 | 55.8 | 56.1 | 56.5 | 56.6 |
| 25°C Tª AIR 26°C Tª WATER | INPUT POWER | kW | 6.7 | 9.4 | 11.8 | 18.7 | 23.6 |
| | OUTPUT POWER | kW | 43.6 | 56.6 | 71.0 | 113.1 | 141.9 |
| | COP | | 6.5 | 6.0 | 6.0 | 6.0 | 6.0 |
| 15°C Tª AIR 26°C Tª WATER | INPUT POWER | kW | 6.4 | 8.6 | 11.0 | 17.1 | 22.1 |
| | OUTPUT POWER | kW | 34.9 | 45.0 | 57.5 | 90.1 | 114.9 |
| | COP | | 5.4 | 5.3 | 5.2 | 5.3 | 5.2 |
| 5°C Tª AIR 26°C Tª WATER | INPUT POWER | kW | 6.5 | 8.5 | 11.2 | 16.9 | 22.3 |
| | OUTPUT POWER | kW | 27.4 | 35.2 | 45.2 | 70.5 | 90.3 |
| | COP | | 4.2 | 4.2 | 4.1 | 4.2 | 4.1 |
| **DIMENSIONS** | | | | | | | |
| SIZE | | | | | | | |
|  | A (mm) | | 1610 | 1910 | | 1922+50 | 2400+100 |
| | B (mm) | | 1160+100 | 1197+100 | | 2110+100 | 2024+50 |
| | C (mm) | | 1347+50 | 1497+50 | | 1590+50 | 1670+50 |
| NET WEIGHT | | kg | 315 | 391 | 437 | 648 | 757 |

NOTE: d* = As per UNE-EN 12102/ISO 3744:2010.

+ info
PDB
Further information on PRODUCTS
www.astralpool.com

# AIR-WATER HEAT PUMPS FOR INDOOR INSTALLATION



Includes Modbus connection

## Maya

- +5°C minimum outdoor air temperature.
- Compact design for installation in a pump room.
- Made of non-corrosive magnesium coated aluminium.
- Direct transmission centrifugal ventilator.
- Scroll compressor.
- Titanium condensers with PVC shells and in G2 titanium coil according to ASTM B 338.99 standard. Guaranteed against corrosion.

R407C

**TECHNICAL FEATURES**

| MODELS | | | MAYA-15 | MAYA-25 |
|---|---|---|---|---|
| MAGNESIUM ALUMINIUM | | | 32505-MOB | 32506-MOB |
| ELECTRIC POWER SUPPLY | | V/Ph/Hz | 400/3/50 | |
| REFRIGERANT GAS | | kg | 2.5 | 4.5 |
| FLOW FANS | | m³/h | 2500 | 6000 |
| WATER FLOW | | m³/h | 7 | 8 |
| Ø CONNECTION | | mm | 50 | |
| Tª. AIR 15ºC | P. INPUT | kW | 3.6 | 5.7 |
| | P. OUTPUT | kW | 16.3 | 24.8 |
| | COP | | 4.5 | 4.3 |

Water temperature 26ºC.
Operating limits and conditions: Maximum water temperature: 36 ºC. Maximum water pressure on entering the machine: 3.5 bar.

# AIR-WATER HEAT PUMPS FOR OUTDOOR INSTALLATION



Includes Modbus connection

## Optima

- +5°C minimum outdoor air temperature.
- Robust, lightweight ABS casing made from magnesium coated aluminium.
- Standard: Operating as a heat pump with reverse cycle defrosting.
- Chiller: Providing heat or cold to maintain the temperature of the pool with reverse cycle defrosting.
- Scroll compressor.
- Titanium condensers made of PVC casing and TITANIUM G2 coil. Guaranteed against corrosion. It includes drainage for care in the winter.

R407C

**TECHNICAL SPECIFICATIONS**

| MODELS | | | OPTIMA-7 | OPTIMA-15 |
|---|---|---|---|---|
| CHILLER | | | 45694-MOB | 45696-MOB |
| ELECTRIC POWER SUPPLY | | V/Ph/Hz | 230/1/50 | 220/1/50 |
| WATER FLOW | STANDARD | m³/h | 12 | 12 |
| | CHILLER | m³/h | 12 | 16 |
| Tª AIR 15ºC | OUTPUT POWER | kW | 8.9 | 16 |
| | INPUT POWER | kW | 1.8 | 3.5 |
| | COP | | 4.9 | 4.6 |
| CHILLER MODE | | | | |
| Tª AIR 30ºC | OUTPUT POWER | kW | 9.2 | 15.7 |
| | INPUT POWER | kW | 2 | 3.9 |
| | EER | | 4.7 | 4.1 |
| Tª AIR 35ºC | OUTPUT POWER | kW | 8.6 | 14.7 |
| | INPUT POWER | kW | 2.2 | 4.3 |
| | EER | | 3.9 | 3.5 |

Water temperature: 26 ºC.
Operating limits and conditions: Maximum water temperature: 40 ºC. Maximum water pressure on entering the machine: 3.5 bar.

## WATER-AIR CHILLERS FOR INDOOR OR OUTDOOR INSTALLATION



ALASKA



SIBERIA

Includes Modbus connection

The fan is fitted vertically in the Alaska 10, 15 and 17 models

### Alaska - Siberia

- +5°C minimum outdoor air temperature.
- 2 compact models: For outdoor (Alaska) or indoor (Siberia) installation.
- Digital display.
- Heating priority (filtration pump control).
- Made of non-corrosive magnesium coated aluminium.
- Helicoidal ventilators with direct coupling motor for the Alaska model, centrifugal for the Siberia model.
- Defrosting thermostat in evaporator for enhanced performance.
- HP & LP safety pressure switch.
- Water flow switch.
- Condensor made of copper pipe with coated aluminium fins (special for corrosive environments).
- Scroll compressor with carter resistance and deoxidized copper.
- Thermostatic expansion valve.
- Titanium evaporator with PVC shell and in G2 titanium coil according to ASTM B 338.99 standard. Guaranteed against corrosion.
- Anti-acid dehydrating filter.

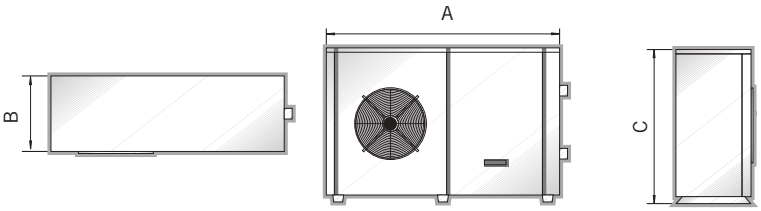


**TECHNICAL FEATURES**

| | | | | | | | | |
|---|---|---|---|---|---|---|---|---|
| | | MODELS | ALASKA-4 | ALASKA-6 | ALASKA-8 | ALASKA-10 | ALASKA-15 | ALASKA-17 |
| | | Code | 32535-MOB | 32536-MOB | 32537-MOB | 32538-MOB | 32540-MOB | 32541-MOB |
| | | MODELS | SIBERIA-4 | SIBERIA-6 | SIBERIA-8 | SIBERIA-10 | SIBERIA-15 | SIBERIA-17 |
| | | Code | 33301-MOB | 33302-MOB | 33303-MOB | 33304-MOB | 33306-MOB | 33307-MOB |
| RECOMMENDED POOL VOLUME | | | 5-9 | 7-14 | 10-20 | 13-26 | 18-36 | 25-50 |
| REFRIGERANT GAS | | | R-407C | | | | | |
| WATER FLOW | | $m^3/h$ | 6-10 | 6-10 | 7-12 | 7-12 | 10-15 | 10-15 |
| Ø CONNECTION | | mm | 50 | | | | | |
| REFRIGERANT GAS CHARGE | | kg | 2 | 4.3 | 4.8 | 5.5 | 6.3 | 6.6 |
| NUMBER OF FAN | | Units | 1 | | | | 2 | |
| AIR FLOW | | | 3800 | 4900 | 5500 | 9800 | 11000 | |
| FREQUENCY | | V/Ph/Hz | 230/1/50 | | 400/3/50 | | | |
| ALASKA AIR T.: 27°C WATER T.: 12°C | INPUT POWER | KW | 1.3 | 2.0 | 2.8 | 3.6 | 5.0 | 6.6 |
| | OUTPUT POWER | KW | 4.4 | 5.7 | 8.9 | 10.7 | 16.6 | 22.7 |
| | EER | | 3.3 | 2.9 | 3.1 | 3.0 | 3.4 | 3.5 |
| SIBERIA AIR T.: 27°C WATER T.: 12°C | INPUT POWER | KW | 1.8 | 2.3 | 3.2 | 4.5 | 7.7 | 9.3 |
| | OUTPUT POWER | KW | 4.4 | 5.7 | 8.9 | 10.7 | 16.6 | 22.7 |
| | EER | | 2.4 | 2.5 | 2.8 | 2.4 | 2.2 | 2.5 |
| RECOMMENDED POOL VOLUME | | $m^3$ | 5-9 | 7-14 | 10-20 | 13-26 | 18-36 | 25-50 |

Maximum air temperature 40°C, minimum water temperature 10°C. Maximum water pressure 3.5 bar.

**DIMENSIONS AND WEIGHT**

| | | | | | | | | |
|---|---|---|---|---|---|---|---|---|
| | | MODELS | ALASKA-4 | ALASKA-6 | ALASKA-8 | ALASKA-10 | ALASKA-15 | ALASKA-17 |
| SIZE | A | mm | 1311 (+80) | | 1411 (+80) | 1372 (+80) | 1728 (+80) | |
| | B | mm | 512 | 540 | 556 | 650 | 708 | |
| | C | mm | 746 | | 846 | 890 | 866 | |
| | WEIGHT | kg | 80 | 92 | 102 | 133 | 167 | 197 |
| | | MODELS | SIBERIA-4 | SIBERIA-6 | SIBERIA-8 | SIBERIA-10 | SIBERIA-15 | SIBERIA-17 |
| SIZE | A | mm | 1311 (+80) | | 1311 (+80) | 1372 (+80) | 1728 (+80) | |
| | B | mm | 550+50 | 700+50 | | 655+50 | 655+50 | |
| | C | mm | 746 | | 846 | 890 | 866 | |
| | WEIGHT | kg | 97 | 112 | 120 | 188 | 219 | 224 |

+ info
PDB
Further information on PRODUCTS
www.astralpool.com

# ELECTRIC HEATERS



ELECTRIC VERSION



MANUAL VERSION (ECO)







ELECTRIC VERSION







MANUAL VERSION (ECO)

COMPATIBLE
NN thing

*Fluidra Connect compatible*

**Titanium models only**

## Compact ElectricHeat: Versions in Titanium and Fluidra Connect compatible

EXTERNALLY:
- Linear configuration that offers ease of installation.
- Compact and simple "all in one" design. Simple and elegant lines.
- User-friendly interface. It has a state-of-the-art touch sensor and OLED display (not available for the ECO version).
- Intuitive fashion information for the user.
- Simple and fast electrical connection system.

INTERNALLY:
- Simplicity of components: the internal components have been simplified and reduced.
- Replaceable parts: the internal components are easy to access and replace.
- Accurate and secure electronic adjustment (manual adjustment in the Eco version).
- Hardware and software able to detect failures in a pool facility and its units (not available for the ECO version).
- Standard model with Incoloy resistance, Titanium model with resistances in titanium.
- Model specifically for Fluidra Connect (not available for the ECO version).

| | Code | Standard Pack | Standard Weight in kg | Standard Volume in $m^3$ |
|---|---|---|---|---|
| COMPACT 3 iNCOLOY | **60170** | 1 | 4.20 | - |
| COMPACT 6 iNCOLOY | **60171** | 1 | 4.20 | - |
| COMPACT 9 iNCOLOY | **60172** | 1 | 4.20 | - |
| COMPACT 12 iNCOLOY | **60173** | 1 | 4.20 | - |
| COMPACT 18 iNCOLOY | **60174** | 1 | 4.20 | - |
| COMPACT 3 Titanium | **65321** | 1 | 4.20 | - |
| COMPACT 6 Titanium | **65322** | 1 | 4.20 | - |
| COMPACT 9 Titanium | **65323** | 1 | 4.20 | - |
| COMPACT 12 Titanium | **65324** | 1 | 4.20 | - |
| COMPACT 18 Titanium | **65325** | 1 | 4.20 | - |
| COMPACT ECO 3 iNCOLOY | **69193** | 1 | 4.20 | - |
| COMPACT ECO 6 iNCOLOY | **69194** | 1 | 4.20 | - |
| COMPACT ECO 9 iNCOLOY | **69195** | 1 | 4.20 | - |
| COMPACT ECO 12 iNCOLOY | **69196** | 1 | 4.20 | - |
| COMPACT ECO 18 iNCOLOY | **69197** | 1 | 4.20 | - |

NB: INCOLOY models do NOT provide protection for salt electrolysis facilities, so this type of facility should use the TITANIUM model to prevent operational problems that would not be covered under warranty.

**TECHNICAL FEATURES**

| ELECTRIC MODELS | | COMPACT 3 | COMPACT 6 | COMPACT 9 | COMPACT-12 | COMPACT-18 |
|---|---|---|---|---|---|---|
| CODES | | 60170 | 60171 | 60172 | 60173 | 60174 |
| | | 65321 | 65322 | 65323 | 65324 | 65325 |
| MECHANICAL MODELS | | ECO 3 | ECO 6 | ECO 9 | ECO 12 | ECO 18 |
| CODES | | 69193 | 69194 | 69195 | 69196 | 69197 |
| POWER | kW | 3 | 6 | 9 | 12 | 18 |
| ELECTRICAL SUPPLY* | V/Ph/Hz | 230 / 1 / 50-60 or 400 / 3 / 50-60 | | | | 400 / 3 / 50-60 |
| MIN. WATER FLOW RATE | $m^3/h$ | 2.4 | | | | |
| MAX. WATER FLOW RATE | $m^3/h$ | 15 | | | | |
| SERVICE PRESSURE | bar | 2 | | | | |
| MAX. PRESSURE | bar | 3 | | | | |
| WATER CONNECTION | mm Ø | 50/63 | | | | |
| MAX. ABSORBED INTENSITY (AMP) | 220V/50Hz/1PH | 14 | 27 | 41 | - | - |
| | 380V/50Hz/3PH | 5 | 9 | 14 | 18 | 27 |
| GROSS WEIGHT | kg | 4.8 | | | | |
| NET WEIGHT | kg | 4.2 | | | | |

*In the case of 230/3/50-60, check special code.

## WATER-WATER EXCHANGER





### Waterheat EVO

Heat exchanger suitable for warming the water temperature of pools and SPAS, thanks to the heat exchange between the primary circuit (warm area) and a secondary one (cold area that we want to warm).

- Titanium housing (secondary, pool water).
- Titanium coil (primary, water for boiler).
- Primary working pressure of 10 bar.
- Secondary working pressure of 3 bar.

| | Code | Standard Pack | Standard Weight in kg | Standard Volume in $m^3$ |
|---|---|---|---|---|
| TIT-20 kW | **71607** | 1 | 1.2 | - |
| TIT-40 kW | **71608** | 1 | 1.7 | - |
| TIT-60 kW | **71609** | 1 | 1.9 | - |
| TIT-105 kW | **71610** | 1 | 2.2 | - |
| TIT-140 kW | **71611** | 1 | 2.7 | - |
| TIT-210 kW | **71612** | 1 | 3.8 | - |
| TIT-300 kW | **71613** | 1 | 5.3 | - |
| TIT-450 kW | **71614** | 1 | 6.8 | - |

**Diagram of assembly below the water level:**

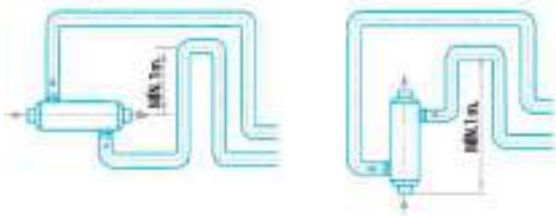

**Diagram of assembly below the water level:**



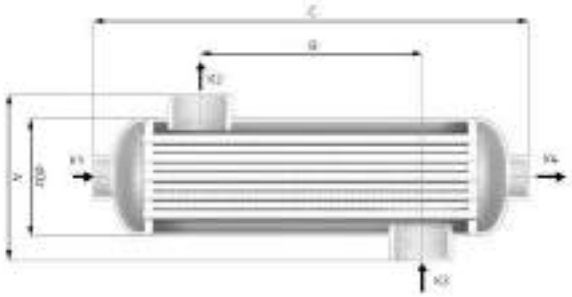

**TECHNICAL FEATURES**

| | MODELS | TIT-20 KW | TIT-40 KW | TIT-60 KW | TIT-105 KW | TIT-140 KW | TIT-210 KW | TIT-300 KW | TIT-450 KW |
|---|---|---|---|---|---|---|---|---|---|
| | CODES | 71607 | 71608 | 71609 | 71610 | 71611 | 71612 | 71613 | 71614 |
| POWER (kW) | 90ºC | 20 | 40 | 60 | 105 | 140 | 210 | 300 | 450 |
| | 60ºC | 10 | 20 | 30 | 40 | 60 | 80 | 120 | 210 |
| | 45ºC | 5 | 10 | 15 | 20 | 3 | 40 | 60 | 100 |
| HEATER | $m^3/h$ | 1.6 | 2.7 | 3.1 | 6.6 | 7.0 | 10.0 | 11.0 | 16.0 |
| HEATER LOAD LOSS | bar | 0.006 | 0.024 | 0.040 | 0.030 | 0.040 | 0.122 | 0.214 | 0.470 |
| HEATER CONNECTION | Inch | G ¾" | | | G 1 ½" | | | | |
| POOL VOLUME | $m^3/h$ | 11 | 15 | 20 | 23 | 20 | 25 | 20 | 21 |
| POOL HEAD LOSS | bar | 0.119 | 0.192 | 0.418 | 0.293 | 0.316 | 0.633 | 0.596 | 0.860 |
| POOL CONNECTION | Inch | G 1" | G 1 ½" | | | | | | |
| DIMENSIONS | A (mm) | 122 | | | 140 | | | | |
| | B (mm) | 75 | 175 | 225 | 170 | 270 | 420 | 670 | 920 |
| | C (mm) | 290 | 390 | 440 | 357 | 457 | 607 | 857 | 1107 |
| | Ø Dz | 80 | | | 102 | | | | |
| WEIGHT | kg | 1.2 | 1.7 | 1.9 | 2.2 | 2.7 | 3.8 | 5.3 | 6.8 |

Consult your service engineer about the right selection of unit depending on your installation.
Figures for power settings calculated for pool water at 20° C.

+ info
Further information on PRODUCTS
www.astralpool.com

# WATER-WATER PLATE HEAT EXCHANGER



## Equipped Waterheat

Heat exchanger suitable for warming the water temperature of pools and SPAS, thanks to the heat exchange between the primary circuit (warm area) and a secondary one (cold area that we want to warm).

- Regulator with secondary pump control, voltage free contact and timer.
- Casing built in Alucoil and ABS plastic.
- Body made in Titanium (secondary, water from pool).
- Coils made in titanium alloy (primary, water from boiler).
- Fully fitted, anti-return valve, primary recirculation pump and control thermostat with immersion probe.
- Primary work pressure 10 bars and secondary work pressure 3 bars.

**CONNECTIONS:**

- Primary (heating): 1".
- Secondary (pool): D-50 three piece link.

| | Code | Standard Pack | Standard Weight in kg | Standard Volume in $m^3$ |
|---|---|---|---|---|
| TIT-20 kW | **43506** | 1 | 10 | - |
| TIT-40 kW | **43507** | 1 | 11 | - |
| TIT-60 kW | **43508** | 1 | 18 | - |

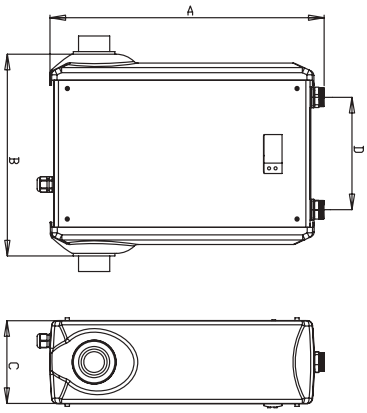





**TECHNICAL FEATURES**

| | MODELS | EQUIP. WATERHEAT-20KW | EQUIP. WATERHEAT-40KW | EQUIP. WATERHEAT-60KW |
|---|---|---|---|---|
| | CODES | 43506 | 43507 | 43508 |
| POWER (kW) | 90ºC | 20 | 40 | 60 |
| | 60ºC | 10 | 20 | 30 |
| | 45ºC | 5 | 10 | 15 |
| HEATER | $m^3/h$ | 1.6 | 2.7 | 3.0 |
| HEATER LOAD LOSS | bar | 0.12 | 0.41 | 0.70 |
| HEATER CONNECTION | Inch | - | - | - |
| POOL VOLUME | $m^3/h$ | 10 | 15 | 20 |
| POOL HEAD LOSS | bar | 0.14 | 0.24 | 0.29 |
| POOL CONNECTION | Inch | - | - | - |
| DIMENSIONS | A (mm) | 530 | 530 | 530 |
| | B (mm) | 450 | 590 | 650 |
| | C (mm) | 160 | 160 | 160 |
| | D (mm) | 215 | 225 | 305 |
| | E (mm) | 1" | 1" | 1" |
| WEIGHT | kg | 10 | 11 | 18 |

Consult your service engineer about the right selection of unit depending on your installation.
Figures for power settings calculated for pool water at 20º C.

## WATER-WATER PLATE HEAT EXCHANGER

### Etna

- Corrugated plates in AISI-316 or titanium.
- EPDM gaskets.
- Housing in epoxy painted carbon steel.
- In non-equipped heat exchangers, AISI-316 stainless steel connections in ISO G2 direct thread.
- In equipped heat exchangers, primary connections in copper, and secondary in PVC.
- In equipped heat exchangers, full regulation, with control of the filtering pump. Double display (setpoint and current reading).
- Simple recirculating pump in the primary circuit is optional.



**Basic model**



**Equipped model**



**Equipped model + recirculating pump**

| Model | AISI-316 codes | | | Titanium codes | | | Power | | N° Plates | Primary circuit | | | Secondary circuit | | |
|---|---|---|---|---|---|---|---|---|---|---|---|---|---|---|---|
| | Basic model | Equipped model | Model Eq+B(1) | Basic model | Equipped model | Model Eq+B(1) | KW | (kcal/h) | | Flow rate ($m^3/h$) | Head loss (bar) | Connections | Flow rate ($m^3/h$) | Head loss (bar) | Connections |
| ETNA-15 | **67985** | **68230** | **68021** | **67994** | **68012** | **68030** | 17 | 15,000 | 5 | 0.75 | 0.3 | 1 ¼" | 0.74 | 0.3 | 1 ¼" |
| ETNA-35 | **68223** | **68004** | **68022** | **67995** | **68013** | **68031** | 40 | 35,000 | 7 | 1.55 | 0.3 | 1 ¼" | 1.52 | 0.3 | 1 ¼" |
| ETNA-50 | **68224** | **68005** | **68023** | **67996** | **68014** | **68032** | 58 | 50,000 | 9 | 2.56 | 0.3 | 1 ¼" | 2.51 | 0.3 | 1 ¼" |
| ETNA-60 | **68225** | **68006** | **68024** | **67997** | **68015** | **68033** | 70 | 60,000 | 11 | 3.09 | 0.3 | 1 ¼" | 3.03 | 0.3 | 1 ¼" |
| ETNA-90 | **67989** | **68007** | **68025** | **67998** | **68016** | **68034** | 105 | 90,000 | 15 | 4.64 | 0.3 | 1 ¼" | 4.55 | 0.3 | 1 ¼" |
| ETNA-120 | **67990** | **68008** | **68026** | **68226** | **68017** | **68035** | 140 | 120,000 | 19 | 6.19 | 0.3 | 1 ¼" | 6.07 | 0.3 | 1 ¼" |
| ETNA-150 | **67991** | **68009** | **68027** | **68227** | **68018** | **68036** | 174.4 | 150,000 | 23 | 7.71 | 0.3 | 1 ¼" | 7.56 | 0.3 | 1 ¼" |
| ETNA-180 | **67992** | **68010** | **68028** | **68228** | **68019** | **68037** | 209 | 180,000 | 29 | 9.23 | 0.3 | 1 ¼" | 9.06 | 0.3 | 1 ¼" |
| ETNA-200 | **67993** | **68011** | **68029** | **68229** | **68020** | **68038** | 233 | 200,000 | 31 | 10.3 | 0.3 | 1 ¼" | 10.1 | 0.3 | 1 ¼" |
| ETNA-250 | **32550** | **32563** | **32576** | **33137** | **33155** | **33173** | 291 | 250,000 | 15 | 12.86 | 0.3 | 2 ½" | 12.61 | 0.3 | 2 ½" |
| ETNA-300 | **32552** | **32565** | **32578** | **33139** | **33157** | **33175** | 349 | 300,000 | 17 | 15.42 | 0.3 | 2 ½" | 15.13 | 0.3 | 2 ½" |
| ETNA-350 | **32553** | **32566** | **32579** | **33140** | **33158** | **33176** | 407 | 350,000 | 21 | 17.98 | 0.3 | 2 ½" | 17.64 | 0.3 | 2 ½" |
| ETNA-400 | **33114** | **33119** | **33124** | **33141** | **33159** | **33177** | 465 | 400,000 | 23 | 20.55 | 0.3 | 2 ½" | 20.13 | 0.3 | 2 ½" |
| ETNA-460 | **33115** | **33120** | **33125** | **69796** | **33160** | **33178** | 535 | 460,000 | 25 | 23.64 | 0.3 | 2 ½" | 23.19 | 0.3 | 2 ½" |
| ETNA-500 | **32554** | **32567** | **32580** | **69797** | **33161** | **33179** | 581 | 500,000 | 27 | 25.18 | 0.3 | 2 ½" | 25.18 | 0.3 | 2 ½" |
| ETNA-580 | **33116** | **33121** | **33126** | **69798** | **33162** | **33180** | 675 | 580,000 | 33 | 29.26 | 0.3 | 2 ½" | 29.26 | 0.3 | 2 ½" |

(1) Eq + B: Equipped model + recirculating pump.

+ info
PDB
Further information on **PRODUCTS**
**www.astralpool.com**

# DEHUMIDIFIERS



TOOL BOX

*AstralPool Toolbox app for IOS and Android*

**Web**
**Dehumidifier configurator: www.astralpool.com -> Calculation tools**

## CDP LINE 2 Dehumidifier

The new CPD LINE v2 dehumidifier console is used in installations where individual humidity and temperature control of small pools and spas is required.

- Evaporation and condensation battery made out of copper pipes with lacquered aluminium fins (specially designed for corrosive environments).
- New generation of rotative compressors, more efficient, reliable and quieter.
- Electric heating or hot water coil option.

The new innovations this equipment introduces include the expanded polypropylene structure (EPP) which reduces its weight and noise level and the front panel with a picture the customer can personalize as an optional extra.



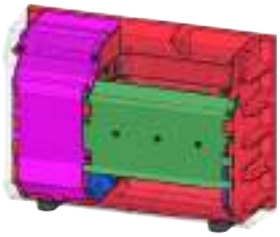

**TECHNICAL SPECIFICATIONS**

| | | MODELS | CDP LINE - 2 | CDP LINE - 3 | CDP LINE - 4 | CDP LINE - 5 |
|---|---|---|---|---|---|---|
| Code | | DEHUMIDIFIER ONLY | 65891 | 65892 | 65893 | 65894 |
| | | WITH HOT WATER COIL OPTION | 65895 | 65896 | 65897 | 65898 |
| | | WITH ELECTRIC HEATING OPTION | 65899 | 65900 | 65901 | 65902 |
| **DEHUMIDIFICATION CAPACITY*** | | l/hour | 2 | 3 | 4 | 5 |
| **HEATING CAPACITY** | | Hot water coil option kW | 6.0 | | 12.0 | |
| | | Electric heating option kW | 4.0 | | 5.0 | |
| **VOLTAGE** | | V/Ph/Hz | 230 / 1 / 50 | | | |
| **FAN** | | $m^3/h$ | 850 (centrifugal fan) | | 1,000 (centrifugal fan) | |
| **REFRIGERANT** | | Type | R-410A | | | |
| **NOISE** | **LEVEL 1 m** | dB (A) | 62 | | 65 | |
| | **LEVEL 3 m** | dB (A) | 54.7 | | 60 | |

| | | A | B | C | D | E | F | G | H | I | J | K | L | M | N | O | P |
|---|---|---|---|---|---|---|---|---|---|---|---|---|---|---|---|---|---|
| **Size** | mm | 400 | 800 | 1075 | 290 | 67 | 80 | 610 | 30 | 480 | 152 | 120 | 531 | 825 | 325 | 45 | 50 |

| | | | | | |
|---|---|---|---|---|---|
| **NET WEIGHT** | Hot water coil option (kg) | 54 | 56 | 63 | 65 |
| | Electric heating option (kg) | 50 | 52 | 58 | 60 |

* General operating conditions:
Installation air temperature: 28º C.
Humidity: 75 %
Installation minimum air temperature: 20ºC






FLUIDRA



# COMMERCIAL
POOLS

# 2020

ASTRALPOOL





FLUIDRA CONNECT




POOL SURROUND EQUIPMENT



BUILDING SOLUTIONS

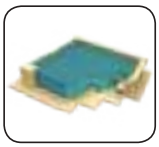

POOL SHELL EQUIPMENT



FILTRATION



PUMPS



WATER TREATMENT EQUIPMENT



CLEANING EQUIPMENT



SPAS AND SAUNAS



HEATING AND DEHUMIDIFICATION



COMPETITION MATERIALS







# COMMERCIAL POOLS
# FLUIDRA CONNECT

420 • Fluidra Connect
423 • Fluidra Connect accessories

# Smart Commercial Pools

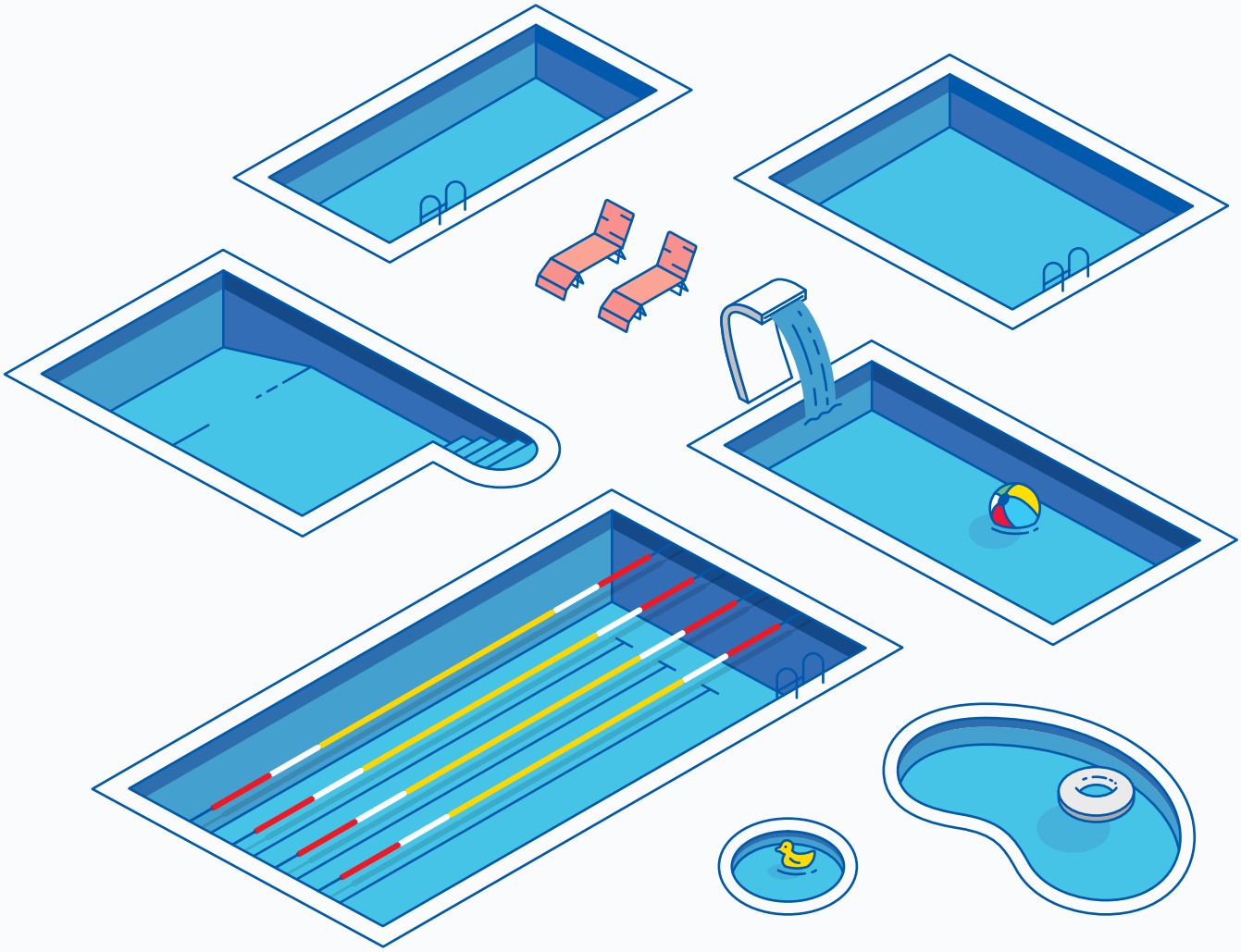

## Connectivity for automation and monitoring all types of commercial pools

### 24/7 Water Quality

Water quality controlled and monitored thanks to the pool equipments synchronized all together in a smart way. Alarm system for real-time corrective maintenance.

### Energy Savings

With a combination of connected products and data assisted preventative maintenance actions to reach optimum energy efficiency.

# Smart Pool Assistants for all type of pools

Control, diagnose and manage your pool through the fluidraconnect.com platform

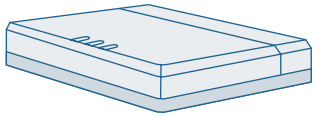

Through the Connect Box from your Connect & Go you will be able to control all types of products, compatible NN as well as the standard ones.

## Filtration

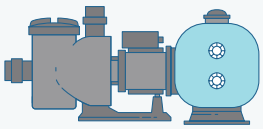

Set-up and control of pumps for energy-efficient programs and optimum filter cleanliness status.

## Water treatment

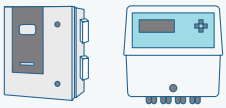

Integral water treatment strategy between all the pool systems. Recording all the measures as per local legislation requirements.

## Lighting



Synchronization with other equipments to generate smart ambient.

## Surround & Garden Equipment



Control all the pool and garden accessories easily: Covers, fountains, IP Cams, even irrigation systems.

## Heating and Dehumidification

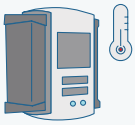

Smart heating strategy for energy optimization together with the filtration and the water treatment equipment.

Control the pools under your supervision from anyplace, whenever you want with our pool assistants platform Fluidra Connect.

**www.fluidraconnect.com**

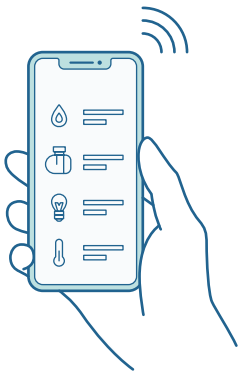



FLUIDRA CONNECT

## FLUIDRA CONNECT

### Fluidra Connect automation and NN Products for Commercial Pools

Fluidra Connect is a smart automation solution that allows both users and pool professionals to control pools remotely.

Different levels of remote control are offered depending on user profile:

- **End user:**
  - User friendly NN app to remotely monitor and control the pool
- **Pool professional:**
  - Intuitive and versatile NN PRO app to set up each pool and allows to monitor all installed pool sites.
  - Advanced remote control of all installed pool sites using the dedicated pool professional website www.fluidraconnect.com.

All product platforms below are NN compatible to allow a smart control & exchange with Fluidra Connect and associated smartphone apps and website.

User(s) can see more operating data and be able to access to more settings compared to standard products.

### Water Treatment Equipment






| | Salt Water Chlorinators and Hybrid systems | | | |
|---|---|---|---|---|
| | **Easy Salt Next** | **Pro-Chlore Salt** | **Nature Salt** | **Neolysis** |
| **More info on page** | 542 | 543 | 544 | 545 |






| | Automatic Regulation and Control Equipment | | Dosing Pumps | Water metering |
|---|---|---|---|---|
| | **AP PR-200 Compatible Electrolysis** | **Controller** | **Optima Plus** | **Woltman type turbine meters** |
| **More info on page** | 556 | 558 | 554 | 556 |

FLUIDRA CONNECT

## FLUIDRA CONNECT

### Pumps




| | |
|---|---|
| The pumps group are controlled through the GPIO (up to 4 pumps) | Variable speed pumps |
| | **Victoria Plus Silent VS** |
| **More info on page** | 141 |

### Pool Lighting



| | |
|---|---|
| RGB LED lighting becomes "NN" with Lumiplus Modbus and modulator (57435) | LED Lighting |
| | **RGB lights** |
| **More info on page** | 242 |

### Cleaning Equipment



| | |
|---|---|
| The Net'n'clean is controlled through the GPIO | Integrated in-floor pool cleaning |
| | **Net'N'Clean** |
| **More info on page** | 231 |

### Heating



| | |
|---|---|
| | Heat Pumps |
| | **ProHeat II** |
| **More info on page** | 593 |

# FLUIDRA CONNECT

THE FUTURE IS HERE

**Fluidra Connect is a smart solution that enables end users and pool dealers to control a pool remotely. This makes it possible for pool dealers to check out, manage and control all the pools they have installed from a PC.**

**Fluidra Connect has two control modes:**

**- Basic, intuitive control for end users front the app.**

**- Advanced control for pool professionals over the www.fluidraconnect.com platform (optional).**



## Connect Box

Connect Box is the brains behind a Fluidra Connect pool installation. Fluidra Connect does not work without Connect Box, which must have a cable or Wi-Fi Internet connection (from a home router, 3G network, etc.).

| | Code | Standard Pack | Standard Weight in kg | Standard Volume in $m^3$ |
|---|---|---|---|---|
| Connect Box | **66671** | 1 | - | - |

In cases that the products to be controlled are not compatible with Fluidra Connect, they can be run using a device called a GPIO.



## GPIO

It has 4 digital inputs and 4 digital outputs.

Using the GPIO, incompatible products, such as a white spotlight or filtration pump, can be switched on or off and their timers set.

It also displays the status of some devices, such as a pool cover.

| | Code | Standard Pack | Standard Weight in kg | Standard Volume in $m^3$ |
|---|---|---|---|---|
| GPIO | **62368** | 1 | - | - |

**Up to 247 GPIOs can be connected to a single Connect Box**

FLUIDRA CONNECT®

CONNECT & GO

# Installation Diagram








CONNECT & GO
POWER CENTER CABINET

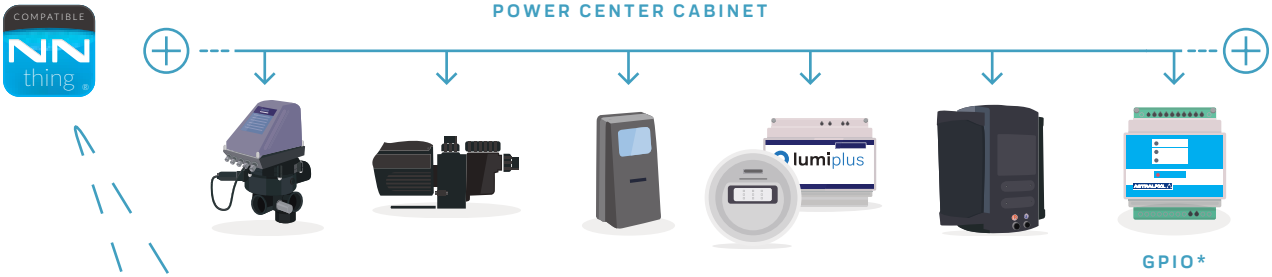


GPIO*

Device with 4 inputs & 4 outputs provided with Connect & Go power center cabinet to manage standard products

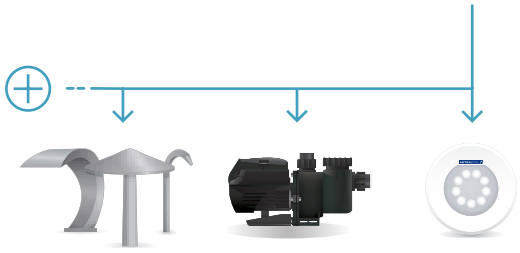

Any standard product can be controlled




More than 100 compatible Fluidra Connect products available

* 1 GPIO is installed inside Connect & Go power center cabinets. Additional GPIO can be purchased separately to control more equipment. See code 62368 on page 37.

FLUIDRA CONNECT
INTERNET OF POOLS

# FLUIDRA CONNECT ACCESSORIES

## Fluidra Connect accessories

| | Code | Standard Pack | Standard Weight in kg | Standard Volume in $m^3$ |
|---|---|---|---|---|
| 230 VAC opto-isolator | **66395** | - | - | - |
| 24 VAC opto-isolator | **66396** | - | - | - |
| Switch - 5 ports | **66390*** | - | - | - |
| Power Line Communications - 2 ports | **66391*** | - | - | - |
| Indoor Wi-Fi access point | **66392*** | - | - | - |
| Outdoor router | **66393*** | - | - | - |
| Portable router | **66394*** | - | - | - |
| 3G router (requires SIM card) | **67297*** | - | - | - |
| 3G router for DIN rail (requires SIM card) | **67298*** | - | - | - |
| SEM1 single-phase meter with transformer | **68441** | - | - | - |
| SEM3 single-phase meter with 3 transformers | **68442** | - | - | - |
| Bridge Modbus TCP/RTU | **68168** | - | - | - |
| Modbus temperature sensor kit | **69682** | - | - | - |

* While stocks last



**66395 - 66396**



**66390**



**66391**



**66392**



**66393**



**66394**



**67297**



**68441-68442**



**68168**



# COMMERCIAL POOLS
# POOL SURROUND EQUIPMENT


426 • Pool access - Ladders
428 • Pool access - Exit grab rails
429 • Pool access - Anchoring sockets and handrails
430 • Pool access - Disabled access
432 • Handrails
433 • Handrail attachment support
434 • Lifeguard chairs
434 • Life-saving accessories
435 • Showers - Showers with timers
435 • Showers - Shower tunnels
436 • Showers - Outdoor footbaths
436 • AstralPool Bike
437 • Water games and ornamental water features
452 • Grilles for overflow

+ info
Further information on **PRODUCTS**
**www.astralpool.com**

# POOL ACCESS - LADDERS



Complies with Standard
**EN 13451-1**
**EN 13451-2**

## Overflow 1000 model

Ladder width 500 mm Ø 43 mm handrail, non-slip surface stainless treads, bright satin finish, anchoring fixtures for connection to the equipotential circuit and removable anchoring with plate for fastening to wall. AISI-316 handrail and steps.

| | Code | Standard Pack | Standard Weight in kg | Standard Volume in $m^3$ |
|---|---|---|---|---|
| 1 "Luxe" steps + 1 double safety step | **07514** | 1 | 13.2 | 0.158 |
| 2 "Luxe" steps + 1 double safety step | **07515** | 1 | 15.3 | 0.180 |
| 3 "Luxe" steps + 1 double safety step | **07516** | 1 | 17.1 | 0.202 |
| 4 "Luxe" steps + 1 double safety step | **07517** | 1 | 19.2 | 0.217 |

| Code | Steps | A | B |
|---|---|---|---|
| **07514** | 2 | 1450 | 700 |
| **07515** | 3 | 1710 | 960 |
| **07516** | 4 | 1970 | 1220 |
| **07517** | 5 | 2230 | 1480 |

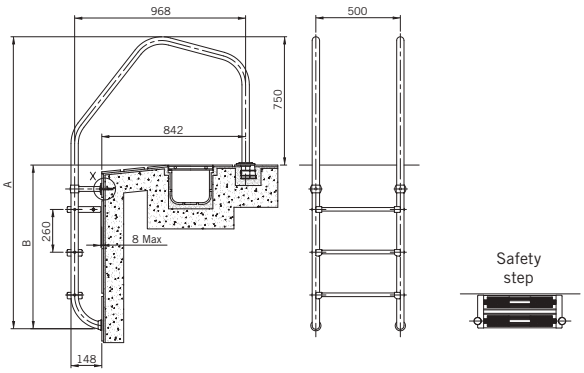




Complies with Standard
**EN 13451-1**
**EN 13451-2**

## Ladder for swimming pools with overflow

Includes variable radius curvature in grip section for a contemporary and attractive look. Steps 500 mm wide. Easy to install. Ø 43 mm x 1.5 mm handrail with AISI-316 bright satin finish stainless steel steps. Anchoring fixtures for connection to the equipotential circuit NB: Do not permit mounting on anchoring fixtures 00043, 08727, 07331, 18243.

| | Code | Standard Pack | Standard Weight in kg | Standard Volume in $m^3$ |
|---|---|---|---|---|
| 2 steps ladder | **32653** | 1 | 13.2 | 0.158 |
| 3 steps ladder | **32654** | 1 | 16.2 | 0.180 |
| 4 steps ladder | **32655** | 1 | 17.1 | 0.202 |
| 5 steps ladder | **32656** | 1 | 19.2 | 0.217 |

| Code | Steps | A | B |
|---|---|---|---|
| **32653** | 2 | 1450 | 700 |
| **32654** | 3 | 1710 | 960 |
| **32655** | 4 | 1970 | 1220 |
| **32656** | 5 | 2230 | 1480 |

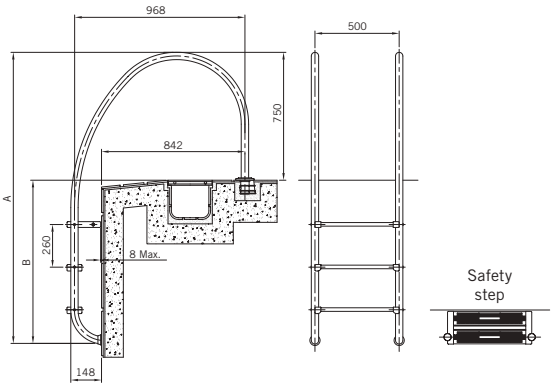




Complies with Standard
**EN 13451-1**
**EN 13451-2**

## Double non-slip safety step

AISI-316 stainless steel with bright satin finish. For all in-ground pool ladder models.

| | Code | Standard Pack | Standard Weight in kg | Standard Volume in $m^3$ |
|---|---|---|---|---|
| Safety step | **70662** | 1 | 2.05 | 0.003 |

## POOL ACCESS - LADDERS



Complies with Standard
**EN 13451-2**

### PMR ladder for public pools

Public ladder manufactured in AISI-316 stainless steel. Polished finish. Step with non-slip punching.

| | Code | Standard Pack | Standard Weight in kg | Standard Volume in m³ |
|---|---|---|---|---|
| 3 steps ladder | **64894** | 1 | 35.0 | - |
| 4 steps ladder | **64895** | 1 | 41.0 | - |
| 5 steps ladder | **64896** | 1 | 35.0 | - |
| 6-step ladder | **64897** | 1 | 46.5 | - |
| 7-step ladder | **64898** | 1 | 46.5 | - |
| 8-step ladder | **64899** | 1 | 46.5 | - |

## POOL ACCESS - EXIT GRAB RAILS



### 800 x 800 mm model

Set of 2 tubular handrails in polished S.S. AISI-316 Ø 43 mm pipe. Exit grab rails with fixing plates are supplied as a pair including fixing plates, gaskets, screws and wall plugs.

| | Code | Standard Pack | Standard Weight in kg | Standard Volume in m³ |
|---|---|---|---|---|
| Attachment by means of fixing plate | **05541** | 1 | 9.27 | 0.10 |
| Attachment for embedding | **05540** | 1 | 8.40 | 0.10 |



### 470 x 800 mm model

Set of 2 tubular handrails in polished S.S. AISI-316 Ø 43 mm pipe. Exit grab rails with fixing plates are supplied as a pair including fixing plates, gaskets, screws and wall plugs.

| | Code | Standard Pack | Standard Weight in kg | Standard Volume in m³ |
|---|---|---|---|---|
| Attachment by means of fixing plate | **05542** | 1 | 6.97 | 0.08 |



### 470 x 800 mm model with rectangular base plate

Set of 2 tubular handrails in polished S.S. AISI-316 Ø 43 mm pipe. The exit grab rails with base plates are supplied with screws and wall plugs.

| | Code | Standard Pack | Standard Weight in kg | Standard Volume in m³ |
|---|---|---|---|---|
| Attachment by means of fixing plate | **05543** | 1 | 7.6 | 0.08 |



### Crossover model with rectangular base plate

Set of 2 tubular handrails in polished S.S. AISI-316 Ø 43 mm pipe. The exit grab rails with base plates are supplied with wall plugs and screws.

| | Code | Standard Pack | Standard Weight in kg | Standard Volume in m³ |
|---|---|---|---|---|
| Attachment by means of fixing plate | **05544** | 1 | 8.46 | 0.18 |

+ info
PDB
Further information on **PRODUCTS**
**www.astralpool.com**

# POOL ACCESS - EXIT GRAB RAILS



## Parallel model

Set of 2 tubular handrails in polished S.S. AISI-316 Ø 43 mm pipe. For fixing with anchoring fixture code 00143 (not included).

| | Code | Standard Pack | Standard Weight in kg | Standard Volume in $m^3$ |
|---|---|---|---|---|
| Parallel model | **00110** | 1 | 10.0 | 0.11 |



## Asymmetrical model

Set of 2 tubular handrails in polished S.S. AISI-316 Ø 43 mm pipe. For fixing with anchoring fixture code 00143 (not included).

| | Code | Standard Pack | Standard Weight in kg | Standard Volume in $m^3$ |
|---|---|---|---|---|
| Asymmetrical model | **00111** | 1 | 10.1 | 0.14 |



## Split ladder - Bottom half

AISI-316 bright satin stainless steel steps and Ø 43 mm handrail. Can be combined with any ladder model. Fastening with plates, gaskets, wall plugs and screws.

| | Code | Standard Pack | Standard Weight in kg | Standard Volume in $m^3$ |
|---|---|---|---|---|
| 1 “Luxe” step + 1 double safety step | **08090** | 1 | 6.0 | 0.04 |
| 2 “Luxe” steps + 1 double safety step | **08091** | 1 | 7.6 | 0.04 |
| 3 “Luxe” steps + 1 double safety step | **08092** | 1 | 9.0 | 0.05 |
| 4 “Luxe” steps + 1 double safety step | **08093** | 1 | 10.5 | 0.07 |

UNE-EN 13451-1-3

Complies with Standard
**EN 13451-1**
**EN 13451-2**



## Grab rails, fixed in and out of the water

Polished AINSI-316 stainless steel. Ø 43 mm.

| | Code | Standard Pack | Standard Weight in kg | Standard Volume in $m^3$ |
|---|---|---|---|---|
| **For embedding** | | | | |
| 2 units. Length 1,220 mm | **00034** | 1 | 11.4 | 0.14 |
| 2 units. Length 1,524 mm | **00035** | 1 | 13.0 | 0.16 |
| **With base plates (gaskets, wall plugs and screws)** | | | | |
| 2 units. Length 1,220 mm | **00036** | 1 | 12.2 | 0.21 |
| 2 units. Length 1,524 mm | **00037** | 1 | 13.6 | 0.24 |



## Grab rail fixed out of the water

In polished AISI-316 stainless steel (Ø 43 mm).

| | Code | Standard Pack | Standard Weight in kg | Standard Volume in $m^3$ |
|---|---|---|---|---|
| **For embedding** | **07780** | 1 | 6.7 | 0.118 |
| **With base plates (gaskets, wall plugs and screws)** | **07781** | 1 | 6.7 | 0.118 |

# POOL ACCESS - ANCHORING SOCKETS AND HANDRAILS



## Anchoring sockets

Made of plastic, with earth connection.

| | Code | Standard Pack | Standard Weight in kg | Standard Volume in m³ |
|---|---|---|---|---|
| For Ø 43 mm pipe. | **00042** | 50 | 7.0 | 0.03 |
| For Ø 48 mm pipe. | **07661** | - | - | - |



## Articulated anchoring sockets

In polished Stainless Steel (AISI-304) for a ladder with a Ø 43 mm pipe.

| | Code | Standard Pack | Standard Weight in kg | Standard Volume in m³ |
|---|---|---|---|---|
| Articulated anchoring socket without base plate | **00043** | 1 | 0.93 | 0.002 |
| Articulated anchoring socket with base plate | **08727** | 1 | 1.0 | 0.002 |



## Removable anchoring socket with base plate

In polished stainless steel (AISI-316) for a Ø 43 mm pipe with gaskets, wall plugs and screws.

| | Code | Standard Pack | Standard Weight in kg | Standard Volume in m³ |
|---|---|---|---|---|
| Set of 2 units | **07331** | 1 | 1.00 | 0.003 |



## Anchor with locking bolts

Made of polished AISI-316 stainless steel. For a Ø 43 mm pipe.

| | Code | Standard Pack | Standard Weight in kg | Standard Volume in m³ |
|---|---|---|---|---|
| Anchoring sockets | **00143** | 2 | 1.2 | 0.003 |



## Ladder foot pad

Made of plastic, the angle can be adjusted by rotating the eye ball socket. Recommended for liner pools.

| | Code | Standard Pack | Standard Weight in kg | Standard Volume in m³ |
|---|---|---|---|---|
| For Ø 43 mm pipe. | **00045** | 50 | 12.6 | 0.03 |
| For Ø 28 mm pipes. | **00046** | 50 | 14.0 | 0.03 |



## Stainless Steel Handrails

Polished Ø 43 mm AISI-316 stainless steel pipes. With fixing plates (including gaskets, screws and wall plugs).

| | Code | Standard Pack | Standard Weight in kg | Standard Volume in m³ |
|---|---|---|---|---|
| Length 0.5 m | **00051** | 2 | 2.8 | 0.02 |
| Length 1 m | **00052** | 2 | 4.3 | 0.04 |
| Length 2 m | **00053** | 2 | 7.9 | 0.09 |
| Length 2.5 m | **00054** | 2 | 9.5 | 0.11 |



## Tee bar

Polished Ø 43 mm AISI-316 stainless steel pipes.

| | Code | Standard Pack | Standard Weight in kg | Standard Volume in m³ |
|---|---|---|---|---|
| **With fixing plates** (including gaskets, screws and wall plugs). | **00056** | 1 | 2.09 | 0.01 |

+ info
PDB
Further information on **PRODUCTS**
**www.astralpool.com**

# POOL ACCESS - DISABLED ACCESS



## Pal and Pal II portable chairs for disabled

Portable chair for disabled. No assembly required in pool deck area. The rechargeable 24V battery powers a mechanical actuator, ensuring that the chair is already ready for use. 30-Cycle duration once charged. The perfect solution for facilities with multiple pools as it can be set up anywhere along the pool deck and put away when not in use. Waterproof remote control. Easy to use, even for the end user. Just roll the chair to the edge of the pool, lock the wheels, set the stabilizers, and it is ready to use. Structure made of waterproof materials to prevent corrosion. Armrest and footrest included. The Pal makes any pool accessible in seconds. It is truly the easiest way to get everyone into the water.

| | Code | Standard Pack | Standard Weight in kg | Standard Volume in $m^3$ |
|---|---|---|---|---|
| PAL II chair.<br>Counterweight in cement blocks. | **69444** | 1 | - | - |

* Ask your AstralPool distributor about infinity pools, spas and other non-standard models.



## Splash semi-portable lifting system for disabled people

Semi-portable chair installed on the pool deck for disabled people. Includes a cart to carry the chair in order to install it in different locations. Installation requires a ground anchor. Its 24 V rechargeable battery supplies power to a metallic actuator, ensuring that the device is always ready for use. Duration of 30 cycles once loaded. Waterproof remote control. The Splash is equipped with a water resistant structure to prevent corrosion and it has armrests and a footrest. Its load capacity of 136 kg and its 359° swivel makes it one of the most practical solutions for disabled access to the pool.

| | Code | Standard Pack | Standard Weight in kg | Standard Volume in $m^3$ |
|---|---|---|---|---|
| Splash Chair | **53924** | 1 | 390 | 1.789 |



## Hydraulic lift

It is made up of a structure made of polished Ø 43 mm AISI-316 stainless steel pipes to which the hydraulic mechanism supporting the chair is fitted. For the hydraulic mechanism to work there needs to be a water supply with a minimum pressure of 3.5 $kg/cm^2$.

| | Code | Standard Pack | Standard Weight in kg | Standard Volume in $m^3$ |
|---|---|---|---|---|
| **Fully equipped lift** | | | | |
| with a 650-mm-long handrail | **71657** | 1 | - | - |
| with a 1000-mm-long handrail | **71658** | 1 | - | - |
| Optional: | | | | |
| Headrest | **71185** | 1 | - | - |
| Foot rests | **71186** | 1 | - | - |

**INSTALLATION:** The external attachment is by means of two fixed metallic anchors (supplied with the device) and two adjustable front supports, which make it possible to adjust the lift to the finishes of different swimming pools.

To make it easier for people that require a hydraulic lift chair to get in and out of leisure or hydrotherapy pools. Easy to assemble.

Min. swimming pool depth: 1 m

# POOL ACCESS - DISABLED ACCESS



Min. swimming pool depth: 1.5 m

For pools shallower than 1.5 m please ask your dealer.

## Hydraulic lift

It is made up of a structure made of polished Ø 43 mm AISI-316 stainless steel pipes to which the hydraulic mechanism supporting the chair is fitted, and a ladder at the side for the assistant. For the hydraulic mechanism to work there needs to be a water supply with a minimum pressure of 3.5 kg/cm$^2$.

| | Code | Standard Pack | Standard Weight in kg | Standard Volume in m$^3$ |
|---|---|---|---|---|
| L-650 Railings | **28619** | 1 | 18.7 | 0.253 |
| L-1000 Railings | **28620** | 1 | 35.5 | 0.383 |
| Cylinder | **28621** | 1 | 13.8 | 0.042 |
| Accessories | **28622** | **1** | 18.3 | 0.178 |

**INSTALLATION:** The external attachment is by means of two fixed metallic anchors (supplied with the device) and two adjustable front supports, which make it possible to adjust the lift to the finishes of different swimming pools.

To make it easier for people that require a hydraulic lift chair to get in and out of leisure or hydrotherapy pools. Easy to assemble.



We also supply the pipes and components needed to install grab rails or other decorative features around the edge of pools.

## 500 mm width model

Made of polished Ø 43 mm AISI-316 stainless steel pipes. Plastic non-slip steps. Supplied with anchoring fixtures and earth connection.

| | Code | Standard Pack | Standard Weight in kg | Standard Volume in m$^3$ |
|---|---|---|---|---|
| 4 steps | **00116** | 1 | 28.0 | 0.300 |
| 5 steps | **00117** | 1 | 40.9 | 0.300 |
| 6 steps | **00118** | 1 | 47.5 | 0.370 |
| 7 steps | **00119** | 1 | 51.4 | 0.370 |
| 8 steps | **00120** | 1 | 48.0 | 1.057 |

## 970 mm width model

Made of polished Ø 43 mm AISI-316 stainless steel pipes. Plastic non-slip steps. Supplied with anchoring fixtures and earth connection.

| | Code | Standard Pack | Standard Weight in kg | Standard Volume in m$^3$ |
|---|---|---|---|---|
| 4 steps | **00116 + 4 Kit 28615** | 1 | - | - |
| 5 steps | **00117 + 5 Kit 28615** | 1 | - | - |
| 6 steps | **00118 + 6 Kit 28615** | 1 | - | - |
| 7 steps | **00119 + 7 Kit 28615** | 1 | - | - |
| 8 steps | **00120 + 8 Kit 28615** | 1 | - | - |



## Step kit for converting a ladder's width from 500 to 970 mm

To convert the ladder from 500 mm to 970 mm, one "Step kit" is required for each of the steps of the ladder. It is made of polished AISI-316 stainless steel pipes, with plastic non-slip steps.

| | Code | Standard Pack | Standard Weight in kg | Standard Volume in m$^3$ |
|---|---|---|---|---|
| Step kit | **28615** | 1 | 5.9 | 0.027 |

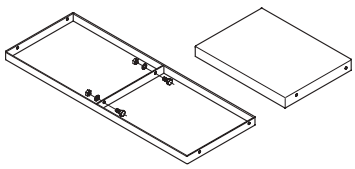

+ info
PDB
Further information on **PRODUCTS**
**www.astralpool.com**

# HANDRAILS

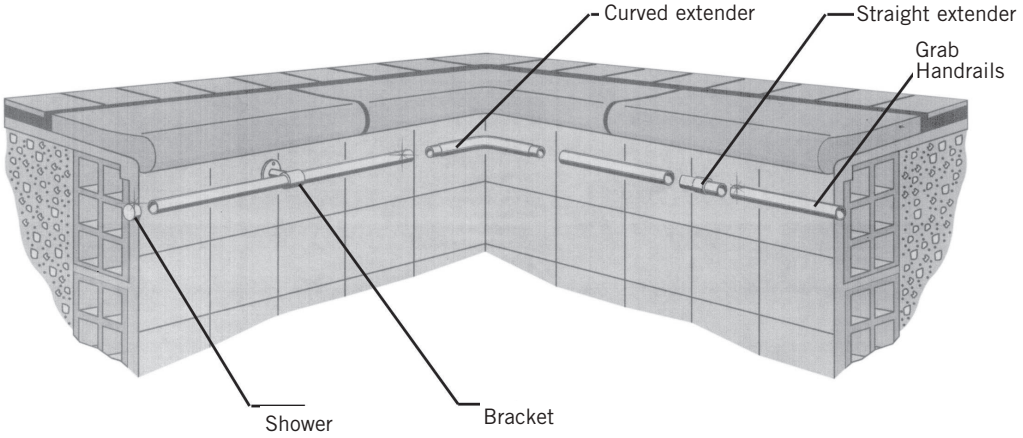




## Straight handrails

In polished AISI-316 stainless steel pipe (Ø 43 mm). The length required must be ordered.

| | Code | Standard Pack | Standard Weight in kg | Standard Volume in $m^3$ |
|---|---|---|---|---|
| With sealed ends | **05545** | 1 | 1.5 | 0.002 |
| With open ends | **19946** | 1 | 1.3 | 0.002 |
| With one end sealed and the other open | **20092** | 1 | 1.3 | 0.002 |



## Straight handrail connector

Made of polished AISI-316 stainless steel. For joining Ø 43 mm stainless steel pipes.

| | Code | Standard Pack | Standard Weight in kg | Standard Volume in $m^3$ |
|---|---|---|---|---|
| Straight handrail connector | **09452** | 1 | 0.32 | 0.001 |



## Curved connector

Made of polished AISI-316 stainless steel. For joining Ø 43 mm pipes.

| | Code | Standard Pack | Standard Weight in kg | Standard Volume in $m^3$ |
|---|---|---|---|---|
| Curved connector | **11286** | 1 | 0.3 | 0.001 |



## End Caps

For the end of Ø 43 mm handrail pipes. Made of polished AISI-316 stainless steel.

| | Code | Standard Pack | Standard Weight in kg | Standard Volume in $m^3$ |
|---|---|---|---|---|
| Shower | **08014** | 1 | 0.1 | 0.001 |

## HANDRAIL ATTACHMENT SUPPORT

### Bracket closed at one end



Made of AISI-316 stainless steel for Ø 43 mm handrails. Supplied with screws, gasket and wall plugs.

| | Code | Standard Pack | Standard Weight in kg | Standard Volume in $m^3$ |
|---|---|---|---|---|
| Bracket closed at one end | **07789** | 2 | 0.6 | 0.002 |

### 90° Angle handrail support



Made of AISI-316 stainless steel for Ø 43 mm handrails. Supplied with screws, gasket and wall plugs.

| | Code | Standard Pack | Standard Weight in kg | Standard Volume in $m^3$ |
|---|---|---|---|---|
| 90° Angle handrail support | **11143** | 1 | 1.17 | 0.002 |

### Adaptor kit for liner swimming pools.



Made of AISI-316 stainless steel.

| | Code | Standard Pack | Standard Weight in kg | Standard Volume in $m^3$ |
|---|---|---|---|---|
| Adaptor kit for liner swimming pools. | **26172** | 1 | 0.3 | 0.002 |

### Split bracket



For Ø 43 mm pipe. Made of polished AISI-316 stainless steel. Supplied with screws and wall plugs (concrete swimming pools) and gasket and screws (liner swimming pools).

| | Code | Standard Pack | Standard Weight in kg | Standard Volume in $m^3$ |
|---|---|---|---|---|
| Concrete swimming pool | **25342** | 2 | 0.72 | 0.002 |
| Liner swimming pool | **28618** | 2 | 1.40 | 0.002 |

### Straight bracket with base plate



Made of AISI-316 polished stainless steel for Ø 43 mm handrails. Supplied with screws, gasket and wall plugs.

| | Code | Standard Pack | Standard Weight in kg | Standard Volume in $m^3$ |
|---|---|---|---|---|
| Straight bracket with base plate | **08013** | 2 | 0.5 | 0.002 |

+ info PDB
Further information on **PRODUCTS**
**www.astralpool.com**

## LIFEGUARD CHAIRS



### Lifeguard chair

Made with polished Ø 43 mm AISI-304 stainless steel pipes. The steps, platform and chair are made of plastic. The base bar has wheels.

| | Code | Standard Pack | Standard Weight in kg | Standard Volume in m³ |
|---|---|---|---|---|
| Lifeguard chair | **56993** | 1 | 55.6 | 0.52 |
| Lifebuoy holder | **56994** | 1 | 0.6 | 0.03 |
| Sunshade bracket | **56995** | 1 | 0.6 | 0.01 |



**56994**



**56995**



### H-400 quick access lifeguard chair

Made of polished Ø 43 mm AISI-304 stainless steel pipes. The steps, platform and chair are made of plastic. Large platform and 90º rotating seat to increase the range of vision. Ideal for children's or paddling pools. Includes bracket for sunshade.

| | Code | Standard Pack | Standard Weight in kg | Standard Volume in m³ |
|---|---|---|---|---|
| H-400 lifeguard chair | **15673** | 1 | 39.6 | 0.66 |



### Multipurpose H-1000 lifeguard chair

Made of polished Ø 43 mm AISI-304 stainless steel pipes. The steps, platform and chair are made of plastic. Large platform and 90º rotating seat to increase the range of vision. Includes bracket for sunshade.

| | Code | Standard Pack | Standard Weight in kg | Standard Volume in m³ |
|---|---|---|---|---|
| H-1000 lifeguard chair | **15674** | 1 | 65.0 | 1.64 |

## LIFE-SAVING ACCESSORIES



### Lifebuoy holder

Made of AISI-316 stainless steel with connection to telescopic handles 01361, 01362, 01363 and 15838 by means of wing nuts.

| | Code | Standard Pack | Standard Weight in kg | Standard Volume in m³ |
|---|---|---|---|---|
| Lifebuoy holder | **01368** | 1 | 1.46 | 0.03 |



### Lifebuoy

Made of Styropor covered with orange canvas, Ø 700 mm.

| | Code | Standard Pack | Standard Weight in kg | Standard Volume in m³ |
|---|---|---|---|---|
| Lifebuoy | **01369** | 6 | 18.0 | 0.330 |



### Lifebuoy holder

Made of polished AISI-304 stainless steel. It can be hung on the wall or fitted to a lifebelt holder post (code 01371). It is supplied with wall plugs and screws.

| | Code | Standard Pack | Standard Weight in kg | Standard Volume in m³ |
|---|---|---|---|---|
| Lifebuoy holder | **01370** | 1 | 1.16 | 0.004 |

## LIFE-SAVING ACCESSORIES



### Lifebelt holder post

In polished AISI-316 stainless steel (Ø 43 mm). Baseplate with 3 holed. Supplied with flexible seal, wall plugs and screws.

| | Code | Standard Pack | Standard Weight in kg | Standard Volume in $m^3$ |
|---|---|---|---|---|
| Lifebelt holder post | **01371** | 1 | 3.0 | 0.01 |

## SHOWERS - SHOWERS WITH TIMERS



### Shower with timer and 4 shower heads

AISI-304 polished stainless steel shower, specially designed for high footfall facilities (public or semi-public pools). AstralPool showers for public facilities are characterised by their highly resistant materials, considered vandal-proof, and the water savings made thanks to their built-in flow limiters. Showerhead height from floor: 2 m. Fastened to floor with screws, with anchoring fixture incorporated. Fastens to ground with screws and includes an anchoring fixture.

| | Code | Standard Pack | Standard Weight in kg | Standard Volume in $m^3$ |
|---|---|---|---|---|
| Shower with timer and 4 shower heads | **59779** | 1 | 18.7 | 0.166 |



**SHOWERHEADS**



**TIMER SWITCHES**

## SHOWERS - SHOWER TUNNELS



### Shower tunnel with arch

For swimming pool entrances. Made of polished AISI-304 stainless steel pipe with a diameter of 28 mm. Supplied with wall plugs and screws.

| | Code | Standard Pack | Standard Weight in kg | Standard Volume in $m^3$ |
|---|---|---|---|---|
| 1 Arch with 3 shower heads. Width 1.2 m | **00100** | 1 | 9,6 | 0.10 |
| 1 Arch with 5 shower heads. Width 2 m | **19948** | 1 | 10.4 | 0.14 |



**SHOWERHEAD**

+ info
PDB
Further information on **PRODUCTS**
**www.astralpool.com**

## SHOWERS - SHOWER TUNNELS



### Control column

Made of AISI-304 stainless steel. The control the automatic opening and closing of the water circuit. It includes the following elements: a 220V/24V transformer, a photoelectric timer cell and an electro valve. It is supplied with wall plugs and screws.

| | Code | Standard Pack | Standard Weight in kg | Standard Volume in $m^3$ |
|---|---|---|---|---|
| Control column | **00102** | 1 | 7.0 | 0.02 |

## SHOWERS - OUTDOOR FOOTBATHS



### Footwash for public use

Footwash tray measuring 2 x 1 m, for public use. Made of polyester resin and fibreglass. Finished with Gelcoat.
Specifications:
- Drain grille 3/8”
- Overflow and water inlet connection 3/8”.
- Non-slip surface incorporated in the polyester.
- Angled tray to avoid water build-up.

| | Code | Standard Pack | Standard Weight in kg | Standard Volume in $m^3$ |
|---|---|---|---|---|
| Blue colour | **21255** | 1 | 30.0 | 0.91 |
| White colour | **21255CL07** | 1 | 30.0 | 0.91 |



### Dosing recipient

Designed to be installed in the footwash (screwed or glued) as a recipient for a 200 g Chlorine tablet that dissolves gradually and disinfects the water. Includes locking screws to prevent undue opening as well as for ensuring user safety.

| | Code | Standard Pack | Standard Weight in kg | Standard Volume in $m^3$ |
|---|---|---|---|---|
| Dosing recipient | **25356** | - | - | - |

## ASTRALPOOL BIKE



### AstralPool Bike

Aquabike made of square and rectangular polished AISI-316 stainless steel pipe. Ideal for gyms, wellness centres, spas, medical facilities, hotels and private pools.
- Made of AISI-316L stainless steel.
- Adjustable height of saddle and handlebar.
- For use in public and residential pools from 1 to 1.5 metres in depth.
- Ergonomic.
- Pedals made of PUR.
- Easy to move about.

| | Code | Standard Pack | Standard Weight in kg | Standard Volume in $m^3$ |
|---|---|---|---|---|
| AstralPool Bike | **67333** | 1 | 20 | 0.12 |

**NOTE: The water features do not include anchoring, pump, control panel nor suction system.**

## WATER GAMES AND ORNAMENTAL WATER FEATURES

Range of cascades for residential pools made of AISI-316 stainless steel. The range is made up of three cascades in an outstanding modern design. Polished or matt finish.
All models come with anchoring. A ½ HP pump is recommended (code 38769).



### Classic water curtain

| | Code | Standard Pack | Standard Weight in kg | Standard Volume in $m^3$ |
|---|---|---|---|---|
| Classic water curtain | **57095** | 1 | 28 | 0.38 |



### Straight water curtain

| | Code | Standard Pack | Standard Weight in kg | Standard Volume in $m^3$ |
|---|---|---|---|---|
| Straight water curtain | **57096** | 1 | 36 | 0.25 |



### One water curtain

| | Code | Standard Pack | Standard Weight in kg | Standard Volume in $m^3$ |
|---|---|---|---|---|
| One water curtain | **57097** | 1 | 36 | 0.25 |



**RECOMMENDED**

**Victoria Plus Silent pump** See p.152



### Residential water curtain

Residential water curtain in polished stainless steel. Fastened to the ground with screws and anchor studs.

| | Code | Standard Pack | Standard Weight in kg | Standard Volume in $m^3$ |
|---|---|---|---|---|
| A-350 AISI-316 stainless steel, 12 $m^3/h$ 2 mca | **52244** | 1 | 10 | 0.12 |
| A-500 AISI-316 stainless steel, 18 $m^3/h$ 2 mca | **52245** | 1 | 15 | 0.24 |

| Code | Suction concrete | Pump | Control box | *Optional Push button + Switch |
|---|---|---|---|---|
| **52244** | 00302 x 2 | 38771 | 25719 | 04047 + 04050 |
| **52245** | 00302 x 2 | 38773 | 25719 | 04047 + 04050 |

* Optional: components for turning the waterfall on from the pool.

NOTE: The water features do not include a pump, control box or suction pipes.

# WATER GAMES AND ORNAMENTAL WATER FEATURES

## Residential water cannon



52242

52243

Residential water cannon in polished stainless steel. Fastened to the ground with screws and anchor studs.

| | Code | Standard Pack | Standard Weight in kg | Standard Volume in m³ |
|---|---|---|---|---|
| **AISI-316 stainless steel** | | | | |
| Round opening. 5 m³/h, 2 mca | **52242** | 1 | 3 | 0.12 |
| Flat opening. 15 m³/h, 2 mca | **52243** | 1 | 5 | 0.13 |
| **AISI-304 stainless steel** | | | | |
| Round opening. 5 m³/h, 2 mca | **52238** | 1 | 3 | 0.12 |
| Flat opening. 15 m³/h, 2 mca | **52239** | 1 | 5 | 0.13 |

| Code | Suction concrete | Pump | Control box | *Optional Push button + Switch |
|---|---|---|---|---|
| **52242** | 00302 | 38769 | 25718 | 04047 + 04050 |
| **52243** | 00302 x 2 | 38771 | 25719 | 04047 + 04050 |
| **52238** | 00302 | 38769 | 25718 | 04047 + 04050 |
| **52239** | 00302 x 2 | 38771 | 25719 | 04047 + 04050 |

*Optional: components for turning the cannon on from the pool.

## Ornamental waterfalls



In AISI-316 stainless steel.

| | Code | Standard Pack | Standard Weight in kg | Standard Volume in m³ |
|---|---|---|---|---|
| Width (W) 300 mm. 1½" connection (B) | **05577** | 1 | 6.9 | 0.06 |
| Width (W) 600 mm, 2" connection (B) | **05578** | 1 | 11.9 | 0.09 |

| Water feature code | Face plate | Anchoring sockets | | Suction | | Pump | Control box | | |
|---|---|---|---|---|---|---|---|---|---|
| | | Concrete | Liner | Concrete | Liner | | Manual push button | Pneumatic push button | |
| | | | | | | | | Concrete | Liner |
| **05577** | - | - | - | **19987** x 1 | **20091** x 1 | **38770** | **19988** | **07669** | **07868** |
| **05578** | - | - | - | **19987** x 2 | **20091** x 2 | **38776** | **19989** | **17154** | **17155** |

**Note:** The pneumatic push button includes: control box, wall conduits and push button.



## SilkFlow waterfalls

Waterfall made of corrosion resistant ABS. Can be fed through the return circuit of the pool filter or through a specific pump.

| | Code | Standard Pack | Standard Weight in kg | Standard Volume in m³ |
|---|---|---|---|---|
| 300 mm waterfall | **45205** | 1 | 1.19 | 0.012 |
| 600 mm waterfall | **45206** | 1 | 2.36 | 0.021 |
| 900 mm waterfall | **45207** | 1 | 3.45 | 0.003 |
| 1200 mm waterfall | **45208** | 1 | 4.62 | 0.004 |
| 1800 mm waterfall | **54090** | 1 | 7.0 | 0.057 |

| Code | Required water flow l/min | Standard pump size HP | A Length of waterfall | B Width of waterfall over the pool surface, at the recommended rate of l/min/m | C Recommended height for the waterfall | D Distance of the water at the recommended rate of l/min/m |
|---|---|---|---|---|---|---|
| **45205** | 50 | 0,5 | 300 mm | 200 mm | 300 mm | 300 mm |
| **45206** | 100 | 0,5 | 600 mm | 500 mm | 600 mm | 300 mm |
| **45207** | 150 | 0,75 | 900 mm | 800 mm | 900 mm | 300 mm |
| **45208** | 200 | 0,75 | 1200 mm | 1100 mm | 900 mm | 300 mm |
| **54090** | 300 | 1,50 | 1800 mm | 1700 mm | 900 mm | 300 mm |

NOTE: The water features do not include anchoring, pump, control panel nor suction system.

# WATER GAMES AND ORNAMENTAL WATER FEATURES



## Cobra Curtain

Height: 1.2 m. Width 600 mm. AISI-316 stainless steel.

| | Code | Standard Pack | Standard Weight in kg | Standard Volume in $m^3$ |
|---|---|---|---|---|
| Matt finish | **19972** | 1 | 23.2 | 0.630 |
| Painted in white | **19973** | 1 | 23.2 | 0.630 |



## Boa Curtain

Height: 1.2 m. Width 340 mm. AISI-316 stainless steel.

| | Code | Standard Pack | Standard Weight in kg | Standard Volume in $m^3$ |
|---|---|---|---|---|
| Bright polished | **19974** | 1 | 11.2 | 0.278 |



## Luxe Curtain

Height: 0.9 m. AISI-316 stainless steel.

| | Code | Standard Pack | Standard Weight in kg | Standard Volume in $m^3$ |
|---|---|---|---|---|
| Bright polished | **19975** | 1 | 60.0 | 0.547 |



## Arched Curtain

AISI-316 stainless steel matt finish.

| | Code | Standard Pack | Standard Weight in kg | Standard Volume in $m^3$ |
|---|---|---|---|---|
| Width 600 mm, Height 800 mm | **20129** | 1 | 34.1 | 0.247 |
| Width 600 mm, Height1000 mm | **20130** | 1 | 62.0 | 0.547 |
| Width 1000 mm, Height 1000 mm | **20131** | 1 | 106.5 | 1.044 |

**19972-19973**

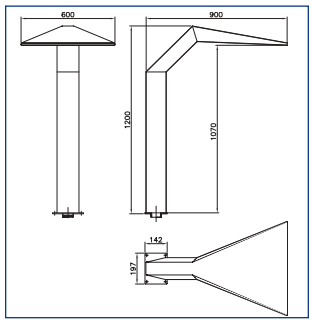


**19974**

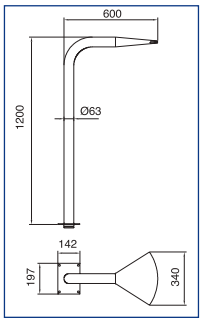


**19975**

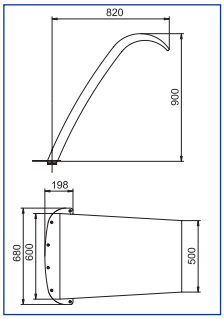


**20129**

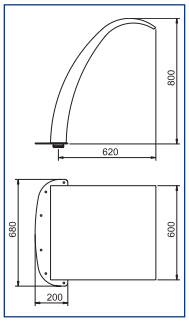


**20130**

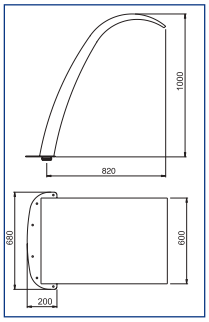


**20131**

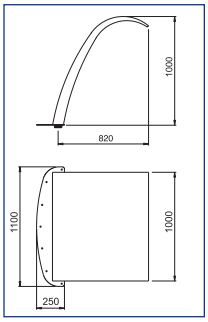


| Curtain code | Faceplate | Anchoring sockets | Suction | | Pump | Control box | | |
|---|---|---|---|---|---|---|---|---|
| | | Concrete | Concrete | Liner | | Manual push button | Pneumatic push button | |
| | | | | | | | Concrete | Liner |
| 19972 | 19981 | 19983 | 19987 x 3 | 20091 x 3 | 38780 | 19990 | 07537 | 07867 |
| 19973 | 19982 | 19983 | 19987 x 3 | 20091 x 3 | 38780 | 19990 | 07537 | 07867 |
| 19974 | 19977 | 19983 | 19987 x 2 | 20091 x 2 | 38776 | 19989 | 17154 | 17155 |
| 19975 | – | 19985 | 19987 x 3 | 20091 x 3 | 38780 | 19990 | 07537 | 07867 |
| 20129 | – | 19985 | 19987 x 3 | 20091 x 3 | 38780 | 19990 | 07537 | 07867 |
| 20130 | – | 19985 | 19987 x 3 | 20091 x 3 | 38780 | 19990 | 07537 | 07867 |
| 20131 | – | 20135 | 19987 x 3 | 20091 x 3 | 38780 | 19990 | 07537 | 07867 |

**Note: The pneumatic push button includes: control box, wall conduits and push button.**

NOTE: The water features do not include anchoring, pump, control panel nor suction system.

## WATER GAMES AND ORNAMENTAL WATER FEATURES



### Swan Curtain 450

In AISI-316 stainless steel.

Matt finish

| Code | Standard Pack | Standard Weight in kg | Standard Volume in m³ |
|---|---|---|---|
| **34387** | 1 | 27.7 | 0.356 |

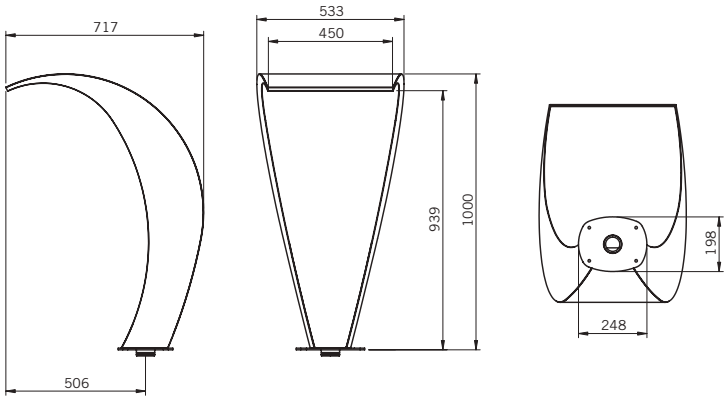




### Swan Curtain 1000

In AISI-316 stainless steel.

Matt finish

| Code | Standard Pack | Standard Weight in kg | Standard Volume in m³ |
|---|---|---|---|
| **34390** | 1 | 38.2 | 0.872 |

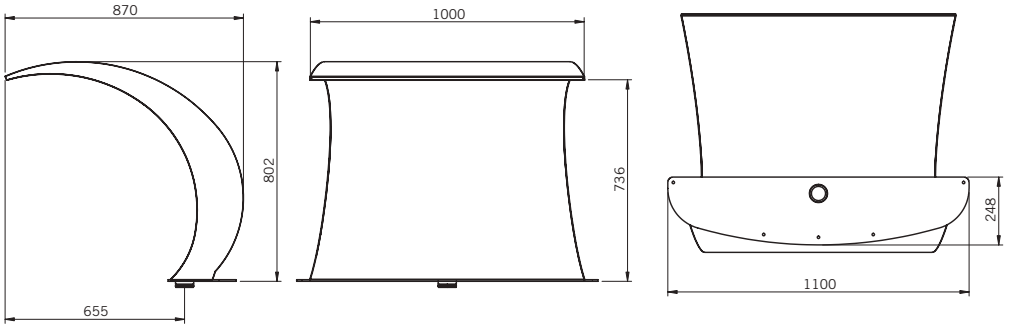


| Curtain code | Anchoring sockets | Suction | | Pump | Control box | | |
|---|---|---|---|---|---|---|---|
| | Concrete | Concrete | Liner | | Manual push button | Pneumatic push button | |
| | | | | | | Concrete | Liner |
| 34387 | 19983 | 19987 x 2 | 20091 x 2 | 38776 | 19989 | 17154 | 17155 |
| 34390 | 20135 | 19987 x 3 | 20091 x 3 | 38780 | 19990 | 07537 | 07867 |

**Note: The pneumatic push button includes: control box, wall conduits and push button.**

NOTE: The water features do not include anchoring, pump, control panel nor suction system.



## WATER GAMES AND ORNAMENTAL WATER FEATURES

### Cannons

In AISI-316 polished stainless steel (cannon only, no nozzles) Ø 50mm pipe. Height 1.2 m

| | Code | Standard Pack | Standard Weight in kg | Standard Volume in m³ |
|---|---|---|---|---|
| | **19968** | 1 | 7.2 | 0.193 |

### Interchangeable nozzles

| | | Code | Standard Pack | Standard Weight in kg | Standard Volume in m³ |
|---|---|---|---|---|---|
|  | **Nozzle No 1** | **05572** | 1 | 0.66 | 0.003 |
|  | **Nozzle No 2** | **05573** | 1 | 0.46 | 0.003 |
|  | **Nozzle No 3** | **05574** | 1 | 0.56 | 0.003 |
|  | **Nozzle No 4** | **05575** | 1 | 0.81 | 0.003 |



### Vertical

In polished AISI-316 Stainless Steel. Pipe: Ø 84 mm. Height 1.5 m.

| | Code | Standard Pack | Standard Weight in kg | Standard Volume in m³ |
|---|---|---|---|---|
| Single | **19969** | 1 | 10 | 0.080 |

NOTE: The water features do not include anchoring, pump, control panel nor suction system.

## WATER GAMES AND ORNAMENTAL WATER FEATURES



### Bell

In AISI-316 stainless steel. Pipe: Ø 63 mm. Height 1.2 m.

| Code | Standard Pack | Standard Weight in kg | Standard Volume in m³ |
|---|---|---|---|
| **19971** | 1 | 9.2 | 0.274 |



### Deluxe Cannon

Stainless Steel polished AISI-316. Pipe: Ø 63 mm. Height: 0.8 mm.

| | | Code | Standard Pack | Standard Weight in kg | Standard Volume in m³ |
|---|---|---|---|---|---|
|  | **Flat** | **19970** | 1 | 8.2 | 0.211 |
|  | **Circular** | **20132** | 1 | 9.4 | 0.209 |
|  | **6 outlets** | **20133** | 1 | 8.6 | 0.213 |

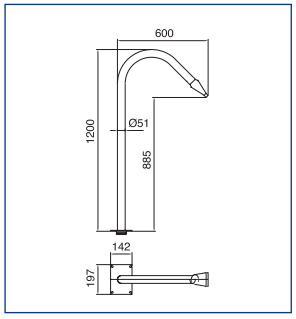


**19968**

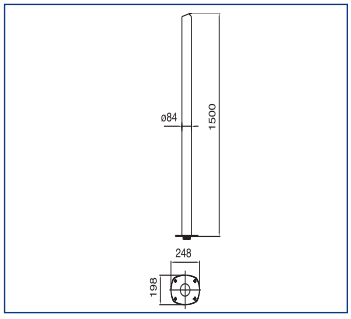


**19969**

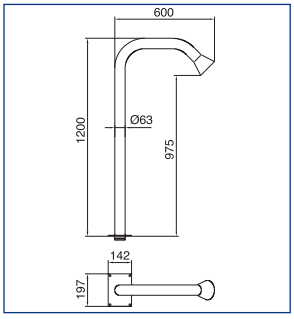


**19971**

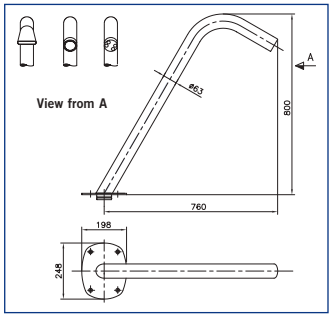


**19970-20132-20133**

| Code water feature | Face plate | Anchoring sockets | Suction | | Pump | Control box | | |
|---|---|---|---|---|---|---|---|---|
| | | Concrete | Concrete | Liner | | Manual push button | Pneumatic push button | |
| | | | | | | | Concrete | Liner |
| 19968 | 19976 | 19983 | 19987 x 1 | 20091 x 1 | 38770 | 19988 | 07669 | 07868 |
| 19969 | 19978 | 19983 | 19987 x 1 | 20091 x 1 | 38770 | 19988 | 07669 | 07868 |
| 19970 | – | 19983 | 19987 x 1 | 20091 x 1 | 38770 | 19988 | 07669 | 07868 |
| 19971 | 19977 | 19983 | 19987 x 2 | 20091 x 2 | 38776 | 19989 | 17154 | 17155 |
| 20132 | – | 19983 | 19987 x 1 | 20091 x 1 | 38770 | 19988 | 07669 | 07868 |
| 20133 | – | 19983 | 19987 x 1 | 20091 x 1 | 38770 | 19988 | 07669 | 07868 |

**Note: The pneumatic push button includes: control box, wall conduits and push button.**

**NOTE: The water features do not include anchoring, pump, control panel nor suction system.**

# WATER GAMES AND ORNAMENTAL WATER FEATURES



## Mushrooms

In AISI-316 polished stainless steel. Column Ø 129 mm. Height 2.3 m

| | Code | Standard Pack | Standard Weight in kg | Standard Volume in m³ |
|---|---|---|---|---|
| Mushroom Ø 285 mm | **19966** | 1 | 24.8 | 0.273 |

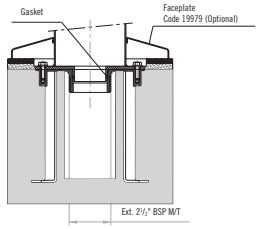


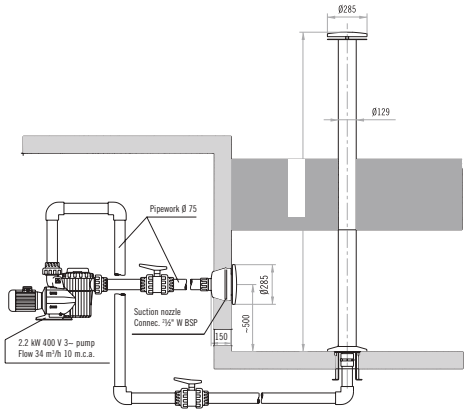


| Code water feature | Face plate | Anchoring sockets | | Suction | | Pump | Control box | | |
|---|---|---|---|---|---|---|---|---|---|
| | | Concrete | Liner | Concrete | Liner | | Manual push button | Pneumatic push button | |
| | | | | | | | | Concrete | Liner |
| 19966 | 19979 | 19983 | 15833 | 19987 x 3 | 20091 x 3 | 38780 | 19990 | 07537 | 07867 |

**Note: The pneumatic push button includes: control box, wall conduits and push button.**



## Umbrellas

In AISI-316 Stainless Steel polished column. Umbrella in polyester

| | Code | Standard Pack | Standard Weight in kg | Standard Volume in m³ |
|---|---|---|---|---|
| Umbrella S, Ø 1100 mm | **22750** | 1 | 30.0 | 0.450 |
| Umbrella M, Ø 1500 mm | **22751** | 1 | 85.0 | 1.900 |
| Umbrella L, Ø 2000 mm | **22752** | 1 | 110.0 | 2.400 |
| Umbrella XL, Ø 2500 mm | **22753** | 1 | 130.0 | 3.500 |
| Column Ø 129 mm | **22754** | 1 | 23.4 | 0.274 |
| Column Ø 254 mm | **22755** | 1 | 55.8 | 0.507 |

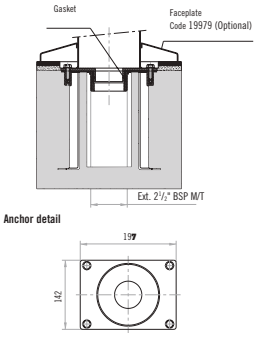


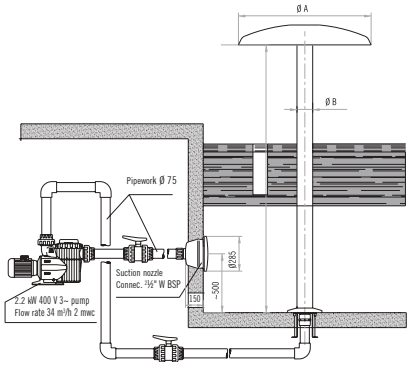


| Parasol Ø | Canopy | Column | Face plate | Anchoring sockets | | Suction | | Pump | Control box | | |
|---|---|---|---|---|---|---|---|---|---|---|---|
| | | | | Concrete | Liner | Concrete | Liner | | Manual push button | Pneumatic push button | |
| | | | | | | | | | | Concrete | Liner |
| 1100 | 22750 | 22754 | 19979 | 19983 | 15833 | 19987 x 3 | 20091 x 3 | 38780 | 19990 | 07537 | 07867 |
| 1500 | 22751 | 22755 | 19980 | 19984 | 19986 | 19987 x 4 | 20091 x 4 | 08003 | 19991 | – | – |
| 2000 | 22752 | 22755 | 19980 | 19984 | 19986 | 19987 x 4 | 20091 x 4 | 08003 | 19991 | – | – |
| 2500 | 22753 | 22755 | 19980 | 19984 | 19986 | 19987 x 5 | 20091 x 5 | 08004 | 19992 | – | – |

**Note: The pneumatic push button includes: control box, wall conduits and push button.**

NOTE: The water features do not include anchoring, pump, control panel nor suction system.

## WATER GAMES AND ORNAMENTAL WATER FEATURES



### Water Mushroom Ø 250 mm

In AISI-316 stainless steel. Its fastening system allows it to be fitted in concrete or prefabricated pools. Column Ø 104 mm. Height 385 mm

| | Code | Standard Pack | Standard Weight in kg | Standard Volume in $m^3$ |
|---|---|---|---|---|
| Matt finish | **34378** | 1 | 5.4 | 0.34 |



### Water Mushroom Ø 400 mm

Made of AISI-316. It has been designed for installing in prefab. and concrete pools. Column Ø 129 mm. Height 460 mm.

| | Code | Standard Pack | Standard Weight in kg | Standard Volume in $m^3$ |
|---|---|---|---|---|
| Matt finish | **34381** | 1 | 9.6 | 0.124 |



### Water Mushroom Ø 670 mm

Made of AISI-316. It has been designed for installing in prefab. and concrete pools. Column Ø 168 mm. Height 600 mm.

| | Code | Standard Pack | Standard Weight in kg | Standard Volume in $m^3$ |
|---|---|---|---|---|
| Matt finish | **34384** | 1 | 24.5 | 0.377 |

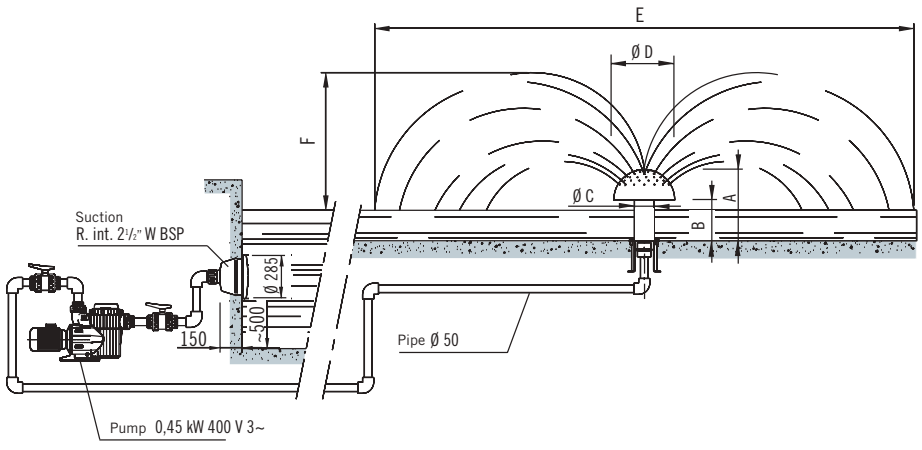


| Size in cm | | | | | | Feature code | Anchoring sockets | | Suction | | Pump | Control box | | |
|---|---|---|---|---|---|---|---|---|---|---|---|---|---|---|
| Mushroom Ø | A | B | Ø C | E | F | | Concrete | Liner | Concrete | Liner | | Manual push button | Pneumatic push button | |
| | | | | | | | | | | | | | Concrete | Liner |
| 250 | 385 | 270 | 104 | 5000 | 1500 | **34378** | 19983 | 15833 | 19987x1 | 20091x1 | 38770 | 19988 | 07669 | 07868 |
| 400 | 460 | | 129 | 6600 | 1700 | **34381** | | | | | | | | |
| 670 | 600 | | 168 | 7000 | 1800 | **34384** | | | | | | | | |

**Note: The pneumatic push button includes: control box, wall conduits and push button.**

**NOTE: The water features do not include anchoring, pump, control panel nor suction system.**

## WATER GAMES AND ORNAMENTAL WATER FEATURES

### Concrete pool wall suction point



In AISI-316 Stainless Steel. Ø 285 mm. Suction point for water features. Connection 2½". Max. Recommended flow: 13 m³/h.

| | Code | Standard Pack | Standard Weight in kg | Standard Volume in m³ |
|---|---|---|---|---|
| Concrete swimming pool | **19987** | 1 | 2.9 | 0.018 |

### Prefabricated and liner pool wall suction point



In AISI-316 Stainless Steel. Ø 285 mm. Suction point for water features. Connection 2½". Max. Recommended flow: 13 m³/h.

| | Code | Standard Pack | Standard Weight in kg | Standard Volume in m³ |
|---|---|---|---|---|
| Prefabricated and liner pool | **20091** | 1 | 2.9 | 0.018 |

### Anchoring for liner pools



**19983**

In AISI-316 Stainless Steel. Includes base for embedding, fixing plate, gaskets and earth connection. Connection 2½".

| | Code | Standard Pack | Standard Weight in kg | Standard Volume in m³ |
|---|---|---|---|---|
| Rectangular anchoring | **19983** | 1 | 2.1 | 0.012 |
| Ø 254 mm anchoring | **19984** | 1 | 9.8 | 0.113 |
| 600 mm wide anchoring | **19985** | 1 | 6.4 | 0.039 |
| 1000 mm wide anchoring | **20135** | 1 | 10.8 | 0.076 |

### Anchoring for liner pools



**15833**

In AISI-316 Stainless Steel. Includes base for embedding, fixing plate, 3 gaskets and earth connection. Connection 2½".

| | Code | Standard Pack | Standard Weight in kg | Standard Volume in m³ |
|---|---|---|---|---|
| Rectangular anchoring | **15833** | 1 | 2.5 | 0.007 |
| Ø 254 mm anchoring | **19986** | 1 | 11.0 | 0.400 |



**19986**

NOTE: The water features do not include anchoring, pump, control panel nor suction system.

## WATER GAMES AND ORNAMENTAL WATER FEATURES

### Base cover



In polished AISI-316 stainless steel.

| | Code | Standard Pack | Standard Weight in kg | Standard Volume in $m^3$ |
|---|---|---|---|---|
| Ø 51 mm | **19976** | 1 | 1.0 | 0.008 |

### Base cover



In polished AISI-316 stainless steel.

| | Code | Standard Pack | Standard Weight in kg | Standard Volume in $m^3$ |
|---|---|---|---|---|
| Ø 63 mm | **19977** | 1 | 1.0 | 0.008 |

### Base cover



In polished AISI-316 stainless steel.

| | Code | Standard Pack | Standard Weight in kg | Standard Volume in $m^3$ |
|---|---|---|---|---|
| Ø 84 mm | **19978** | 1 | 0.9 | 0.006 |

### Base cover



In polished AISI-316 stainless steel.

| | Code | Standard Pack | Standard Weight in kg | Standard Volume in $m^3$ |
|---|---|---|---|---|
| Ø 129 mm | **19979** | 1 | 0.9 | 0.005 |

### Base cover



In polished AISI-316 stainless steel.

| | Code | Standard Pack | Standard Weight in kg | Standard Volume in $m^3$ |
|---|---|---|---|---|
| Ø 254 mm | **19980** | 1 | 0.9 | 0.006 |

NOTE: The water features do not include anchoring, pump, control panel nor suction system.

# WATER GAMES AND ORNAMENTAL WATER FEATURES



## Base cover

| | Code | Standard Pack | Standard Weight in kg | Standard Volume in $m^3$ |
|---|---|---|---|---|
| 600 mm curtain. Matt finish | **19981** | 1 | 1.22 | 0.008 |



## Base cover

| | Code | Standard Pack | Standard Weight in kg | Standard Volume in $m^3$ |
|---|---|---|---|---|
| 600 mm curtain. Painted | **19982** | 1 | 1.28 | 0.008 |



CE

## Control box – Manual

| | Code | Standard Pack | Standard Weight in kg | Standard Volume in $m^3$ |
|---|---|---|---|---|
| **Manual - control box** | | | | |
| 0.45 kW (0.5 HP) 400 V III | **19988** | 1 | 0.7 | 0.005 |
| 1.1 kW (1.5 HP) 400 V III | **19989** | 1 | 0.7 | 0.005 |
| 2.2 kW (3.0 HP) 400 V III | **19990** | 1 | 0.7 | 0.005 |
| 2.65 kW (3.5 HP) 400 V III | **19991** | 1 | 0.7 | 0.005 |



## Control box pneumatic switch

Enables bathers to control water features from inside the pool. Includes control box, wall conduit, air pipe and pneumatic switch.

| | Code | Standard Pack | Standard Weight in kg | Standard Volume in $m^3$ |
|---|---|---|---|---|
| **For concrete pool** | | | | |
| 2.2 kW (3.0 HP) 400 V III | **07537** | 1 | 3.1 | 0.02 |
| 0.45 kW (0.5 HP) 400 V III | **07669** | 1 | 3.1 | 0.02 |
| 1.1 kW (1.5 HP) 400 V III | **17154** | 1 | 3.1 | 0.02 |
| **For prefabricated pools** | | | | |
| 2.2 kW (3.0 HP) 400 V III | **07867** | 1 | 3.2 | 0.02 |
| 0.45 kW (0.5 HP) 400 V III | **07868** | 1 | 3.2 | 0.02 |
| 1.1 kW (1.5 HP) 400 V III | **17155** | 1 | 3.2 | 0.02 |

All products must be installed at a depth of 30–40 cm. See the technical specifications on the following pages.

## WATER GAMES AND ORNAMENTAL WATER FEATURES

Water features help to create a leisure space where you can enjoy water activities in a fun, safe and physically active environment with your family.



### Hydra

Body of polyester reinforced with fiberglass.
Outlet nozzles made of stainless steel AISI-304.
Hardware made of S.S. AISI-304.

| | Code | Standard Pack | Standard Weight in kg | Standard Volume in $m^3$ |
|---|---|---|---|---|
| Hydra | **66450** | 1 | - | - |



### Crux

Body of polyester reinforced with fiberglass.
Outlet nozzles are made of stainless steel AISI-304 and polyacetal.
Hardware made of S.S. AISI-304.

| | Code | Standard Pack | Standard Weight in kg | Standard Volume in $m^3$ |
|---|---|---|---|---|
| Crux | **66449** | 1 | - | - |



### Corvus

Body of polyester reinforced with fiberglass.
Outlet nozzles made of polyacetal (POM).
Hardware made of S.S. AISI-304.

| | Code | Standard Pack | Standard Weight in kg | Standard Volume in $m^3$ |
|---|---|---|---|---|
| Corvus | **66451** | 1 | - | - |



### Rainbow Sunshade

Bodywork in polyester reinforced with fibreglass. AISI-304 stainless steel shaft.
Outlet nozzles made of stainless steel AISI-304.
Hardware made of S.S. AISI-304.

| | Code | Standard Pack | Standard Weight in kg | Standard Volume in $m^3$ |
|---|---|---|---|---|
| Rainbow Sunshade | **66452** | 1 | - | - |



### Palm

Shape made of polyester reinforced with fiberglass.
Body made of stainless steel AISI-304.
Outlet nozzles made of polyacetal (POM).
Hardware made of S.S. AISI-304.

| | Code | Standard Pack | Standard Weight in kg | Standard Volume in $m^3$ |
|---|---|---|---|---|
| Palm | **66453** | 1 | - | - |



### Bow

Body made of stainless steel AISI-304.
Polyacetal sprinklers.
Hardware made of stainless steel.

| | Code | Standard Pack | Standard Weight in kg | Standard Volume in $m^3$ |
|---|---|---|---|---|
| Bow | **66456** | 1 | - | - |

All products must be installed at a depth of 30–40 cm. See the technical specifications on the following pages.

## WATER GAMES AND ORNAMENTAL WATER FEATURES



### Lamppost

Baskets made of fibreglass.
Body made of stainless steel AISI-304.
Outlet nozzles are made of stainless steel AISI-304.
Hardware made of stainless steel AISI-304.

| | Code | Standard Pack | Standard Weight in kg | Standard Volume in $m^3$ |
|---|---|---|---|---|
| Lamppost | **66454** | 1 | - | - |



### Streetlight

Shape made of polyester reinforced with fiberglass.
Body made of stainless steel AISI-304.
Outlet nozzles made of stainless steel AISI-304.
Hardware made of stainless steel AISI-304.

| | Code | Standard Pack | Standard Weight in kg | Standard Volume in $m^3$ |
|---|---|---|---|---|
| Streetlight | **66455** | 1 | - | - |



### Rainbow Mini Slide

Slide made of polyester reinforced with fiberglass.
Panels made of 20 mm high density polythene.
Hardware made of stainless steel AISI-304.

| | Code | Standard Pack | Standard Weight in kg | Standard Volume in $m^3$ |
|---|---|---|---|---|
| Rainbow Mini Slide | **66457** | 1 | - | - |



### Whale Mini Slide

Slide made of polyester reinforced with fiberglass.
Panels made of 20 mm high density polythene.
Hardware made of stainless steel AISI-304.

| | Code | Standard Pack | Standard Weight in kg | Standard Volume in $m^3$ |
|---|---|---|---|---|
| Whale Mini Slide | **66458** | 1 | - | - |



### Atlantic

Slide made of polyester reinforced with fiberglass.
Posts made of AISI-304 stainless steel, coated in polyester paint.
High-density 15 mm polyethylene panels.
Outlet nozzles are made of stainless steel AISI-304 and polyacetal.
Hardware made of stainless steel AISI-304.

| | Code | Standard Pack | Standard Weight in kg | Standard Volume in $m^3$ |
|---|---|---|---|---|
| Atlantic | **66459** | 1 | - | - |

+ info
Further information on **PRODUCTS**
**www.astralpool.com**

## WATER GAMES AND ORNAMENTAL WATER FEATURES



**Article to be installed at poolside at a depth of at least 110 cm.**

### Active

Slide made of polyester reinforced with fiberglass.
Wooden posts
Panels made of 20 mm high density polythene.
Handrail and fasteners made of AISI-304 stainless steel.
Baseplates made of AISI-304 stainless steel.

| | Code | Standard Pack | Standard Weight in kg | Standard Volume in $m^3$ |
|---|---|---|---|---|
| Active | **66460** | 1 | - | - |





**This product must be installed at a depth of 30–40 cm.**

### Bubbles

Slide made of polyester reinforced with fiberglass.
Posts made of AISI-304 stainless steel, coated in polyester paint.
High-density 15 mm polyethylene panels
Outlet nozzles made of polyacetal (POM).
Hardware made of stainless steel AISI-304.

| | Code | Standard Pack | Standard Weight in kg | Standard Volume in $m^3$ |
|---|---|---|---|---|
| Bubbles | **66461** | 1 | - | - |

**TECHNICAL FEATURES**

| Code | Name | Floor plan dimensions (cm) | Maximum height of water feature (cm) | Required flow rate (l/min) | Pressure (bar) |
|---|---|---|---|---|---|
| **66450** | **Hydra** | Ø 87 | 161.5 | 120 | 1 |
| **66449** | **Crux** | 130 x 50 | 140 | 130 | 1 |
| **66451** | **Corvus** | 60 x 60 | 163.5 | 47 | 1 |
| **66452** | **Sunshade Rainbow** | Ø 160 | 289.5 | 400 | 1 |
| **66453** | **Palm** | Ø 223 | 350 | 120 | 1 |
| **66456** | **Bow** | 320 | 160 | 70 | 1 |
| **66454** | **Lamppost** | Ø 79 | 345 | 120 | 1 |
| **66455** | **Streetlight** | Ø 198 | 360 | 360 | 1 |
| **66457** | **Rainbow Mini Slide** | 279 x 630 | 105 | - | - |
| **66458** | **Whale Mini Slide** | 276 x 660 | 101 | - | - |
| **66459** | **Atlantic** | 331 x 108 | 412 | 850 | 1 |
| **66460** | **Active** | 575 x 423 | 275 | 48 | 1 |
| **66461** | **Bubbles** | 660 x 582 | 375 | 400 | 1 |

## WATER GAMES AND ORNAMENTAL WATER FEATURES



### Wave Splash bucket

New

Designed and manufactured according to the standards EN-1176. It has nozzles embedded and rotating parts that avoid grips and entrapments in order to ensure maximum safety.

Used materials:

- Aisi-304 stainless steel painted with powder coating of polyester, matt finish and treaty against the heat.
- Drive nozzles made of synthetic polymer POM.
- AISI-304 stainless steel hardware vandal-proof.
- Feet protection to prevent children from damage.

| | Code | Standard Pack | Standard Weight in kg | Standard Volume in $m^3$ |
|---|---|---|---|---|
| Lamppost | **IS-30A47** | 1 | - | - |

**READY FOR FUN?**

**It is a game whose main feature is the surprise factor. Children do not know when the cube is filled and overturn on them all the water it contains. It is specially designed for older children or young people.**

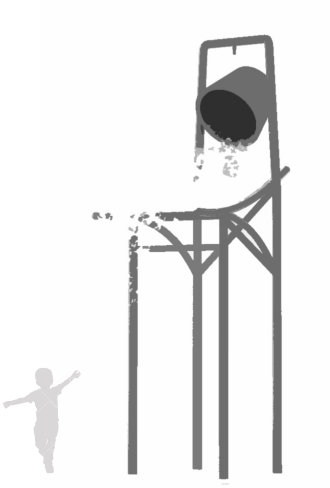

### How is it installed ?

It is necessary to soak it into the concrete anchor and connect it to a water intake.

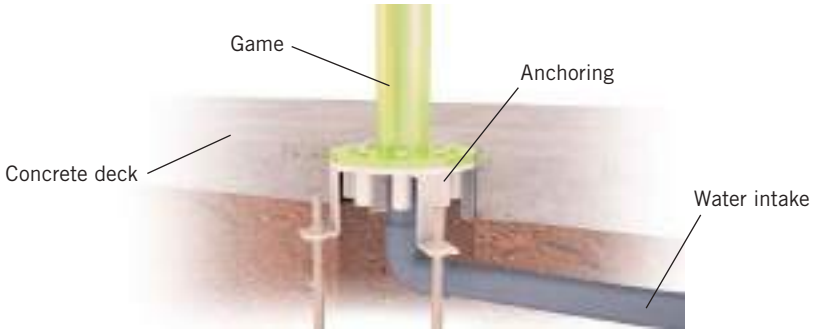


**TECHNICAL FEATURES**

| | |
|---|---|
| **Code** | **IS-30A47** |
| **Measurements** | 195 X 140 X 455 cm |
| **Age range** | 4 - 15 years |
| **Users** | 8 users |
| **Water outlets** | 1 unit |
| **Pool depth** | From 0 to 35 cm |
| **Pressure** | $10^5$ Pa |
| **Water flow** | 200 lpm |



## GRILLES FOR OVERFLOW

### GENERAL NOTE FOR ALL MODELS

Made of PP stabilized against UV rays. The whole range comes in white. Ask your dealer about other colours.

Made up of tiles in modules for straight and curved sections (outer radius of 1 or 2 m), they click into place (male-female fitting), which gives certain leeway in assembling them, as well as absorbing their potential expansion due to the temperature changes to which they are exposed.

For all models of grating, a channel 5 mm wider than the grating must be built so that it easily fits into place and any potential expansion is prevented.

| Channel width | Grating width |
|---|---|
| 200 | 195 |
| 250 | 245 |
| 300 | 295 |
| 350 | 345 |

The height (h) of the grating varies depending on the model.

– Longitudinal model h = 24 mm

– Transversal model h = 22 mm and h = 35 mm

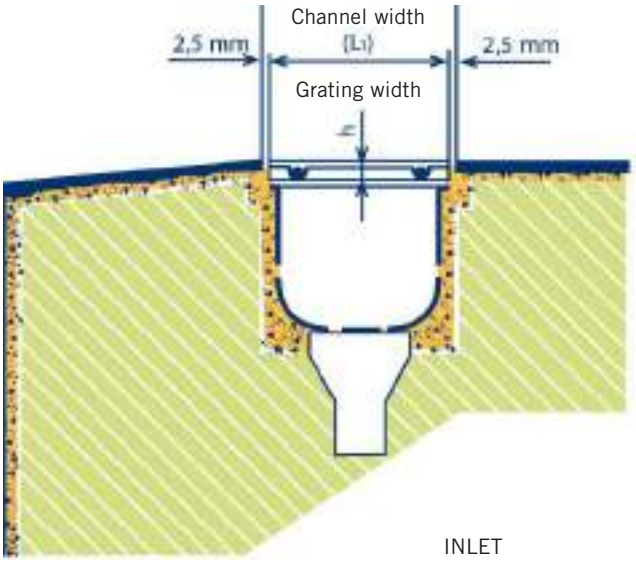


INLET
CODE 00302

### LONGITUDINAL MODEL

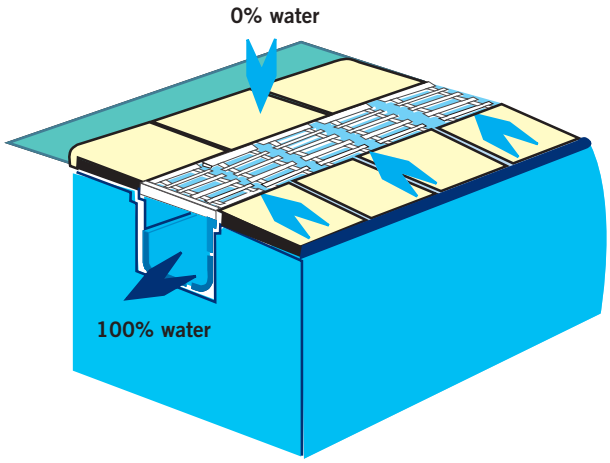


The longitudinal design of this model ensures that any excess water from the pool is not allowed to overflow onto the pool deck, thus maintaining it practically dry.

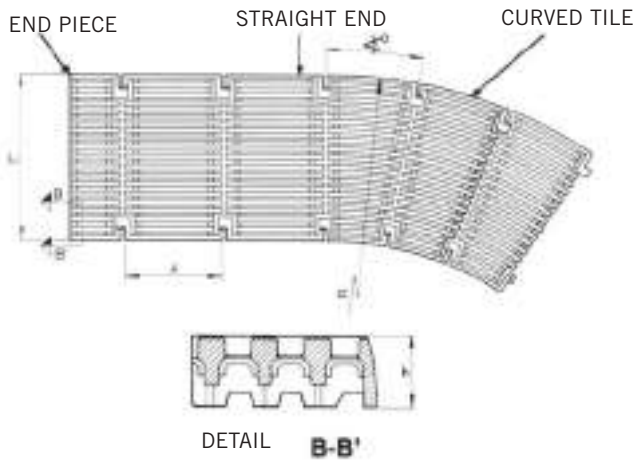


| | Model | L | L1 | h | A | ∢°r.1m. | ∢°r.2m. |
|---|---|---|---|---|---|---|---|
| STRAIGHT END | 05581 | 200 | 195 | 24 | 206 | - | - |
| | 05582 | 250 | 245 | 24 | 206 | - | - |
| | 05583 | 300 | 295 | 24 | 206 | - | - |
| | 05584 | 350 | 345 | 24 | 206 | - | - |
| END PIECE | 06420 | 200 | 195 | 24 | - | - | - |
| | 06421 | 250 | 245 | 24 | - | - | - |
| | 06422 | 300 | 295 | 24 | - | - | - |
| | 06423 | 350 | 345 | 24 | - | - | - |

+ info PDB
Further information on **PRODUCTS**
**www.astralpool.com**

# GRILLES FOR OVERFLOW



## Longitudinal grating tile

Made of PP stabilized against UV rays. Grating fastened together using male-female hooks (5 units = 1,024 meters). The flexible properties of the grating means a radius of up to 5 m can be covered.

| | Code | Standard Pack | Standard Weight in kg | Standard Volume in $m^3$ |
|---|---|---|---|---|
| Height 24 mm, width 195 mm | **05581** | 45 | 16.2 | 0.080 |
| Height 24 mm, width 245 mm | **05582** | 29 | 13.4 | 0.080 |
| Height 24 mm, width 291 mm | **05583** | 28 | 15.6 | 0.080 |
| Height 24 mm, width 345 mm | **05584** | 19 | 13.2 | 0.080 |



## End piece kit for parallel grating

Made of AISI-304 stainless steel plate, with end piece and longitudinal grating made of PP stabilized against UV rays. Made so that the grating in the end piece can be cut to fit in place.

| | Code | Standard Pack | Standard Weight in kg | Standard Volume in $m^3$ |
|---|---|---|---|---|
| Height 24 mm, width 195 mm | **16064** | 1 | 0.380 | 0.001 |
| Height 24 mm, width 245 mm | **16065** | 1 | 0.432 | 0.002 |
| Height 24 mm, width 291 mm | **16066** | 1 | 0.525 | 0.002 |
| Height 24 mm, width 345 mm | **16067** | 1 | 0.655 | 0.002 |



## Perimeter grating

Range of overflow grating for swimming pools. Made of homopolymer polypropylene, with additives for UV protection. Available in 500 mm long modules with male-female hooks for easy and fast assembly.

| | Code | Standard Pack | Standard Weight in kg | Standard Volume in $m^3$ |
|---|---|---|---|---|
| 0.5 m longitudinal grating<br>Height 22 mm Width 195 mm | **28664** | 20 | 19.9 | 0.080 |

**Other grating colours can be made to order.**
**For further information, ask your AstralPool dealer.**

+ info
Further information on **PRODUCTS**
**www.astralpool.com**

# GRILLES FOR OVERFLOW





## Modular transversal grating for curves

Made of PP stabilized against UV rays. Assembled by fitting the modules together. Compliant with standard EN-13451-1 (8 mm). Available in 5 colours. Other grating colours can be made to order. Total of 53 units per metre. For further information, please contact your AstralPool dealer.

| | Code | Standard Pack | Standard Weight in kg | Standard Volume in $m^3$ |
|---|---|---|---|---|
| **MODULAR GRATING FOR CURVES** | | | | |
| Height 22 mm, width 195 mm | **34190** | 470 | 14.1 | 0.08 |
| Height 22 mm, width 245 mm | **34191** | 320 | 12.4 | 0.08 |
| Height 22 mm, width 295 mm | **34192** | 300 | 15.0 | 0.08 |
| Height 22 mm, width 335 mm | **34193** | 250 | 15.0 | 0.08 |
| **REVERSIBLE MODULAR GRATING FOR CURVES** | | | | |
| Height 35 mm, width 195 mm | **34194** | 450 | 16.0 | 0.08 |
| Height 35 mm, width 245 mm | **34195** | 300 | 13.7 | 0.08 |
| Height 35 mm, width 295 mm | **34196** | 290 | 17.3 | 0.08 |
| Height 35 mm, width 335 mm | **34197** | 250 | 17.4 | 0.08 |

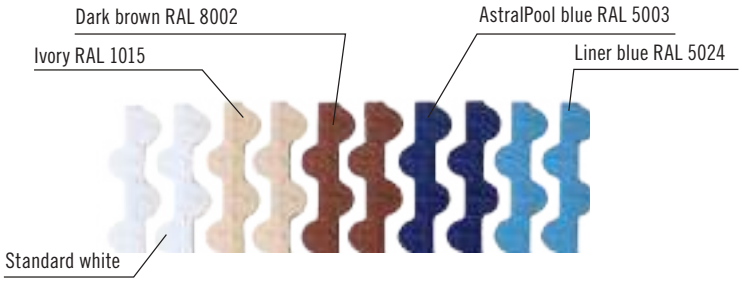


| Colour | Code |
|---|---|
| White | - |
| RAL 1015 | **CL90** |
| RAL 8002 | **CL109** |
| RAL 5003 | **CL60** |
| RAL 5024 | **CL 108** |



## Transversal grating for curves

Modular transversal grating for curves. Made of PP stabilized against UV rays. Assembled by fitting the modules together. Compliant with standard EN-13451-1 (8 mm). Class 3 slip resistance (Rd>45) pursuant to UNE-ENV 12633 and as specified in section SU1 of the Technical Building Code currently in force.

| | Code | Standard Pack | Standard Weight in kg | Standard Volume in $m^3$ |
|---|---|---|---|---|
| Height 22 mm, width 195 mm | **52535** | 470 | 14.1 | 0.08 |
| Height 22 mm, width 245 mm | **52536** | 320 | 12.4 | 0.08 |
| Height 22 mm, width 295 mm | **52537** | 300 | 15.0 | 0.08 |
| Height 22 mm, width 335 mm | **52538** | 250 | 15.0 | 0.08 |
| Height 35 mm, width 195 mm | **52539** | 450 | 16.0 | 0.08 |
| Height 35 mm, width 245 mm | **52540** | 300 | 13.7 | 0.08 |
| Height 35 mm, width 295 mm | **52541** | 290 | 17.3 | 0.08 |
| Height 35 mm, width 335 mm | **52542** | 250 | 17.4 | 0.08 |

Other grating colours can be made to order.
For further information, ask your AstralPool dealer.

Other grating colours can be made to order.
For further information, ask your AstralPool dealer.

# GRILLES FOR OVERFLOW



## Modular transversal grating for curves

Made of PP stabilized against UV rays. Assembled by fitting the modules together. Total of 45 units per metre.

| | Code | Standard Pack | Standard Weight in kg | Standard Volume in $m^3$ |
|---|---|---|---|---|
| **MODULAR GRATING FOR CURVES** | | | | |
| Height 22 mm, width 195 mm | **11107** | 470 | 15.8 | 0.080 |
| Height 22 mm, width 245 mm | **11108** | 320 | 13.6 | 0.080 |
| Height 22 mm, width 295 mm | **19202** | 300 | 18.0 | 0.080 |
| Height 22 mm, width 335 mm | **19203** | 250 | 17.0 | 0.080 |
| **REVERSIBLE MODULAR GRATING FOR CURVES** | | | | |
| Height 35 mm, width 195 mm | **00220** | 450 | 16.5 | 0.080 |
| Height 35 mm, width 245 mm | **00221** | 300 | 14.3 | 0.080 |
| Height 35 mm, width 295 mm | **00222** | 290 | 19.3 | 0.080 |
| Height 35 mm, width 335 mm | **00223** | 250 | 18.1 | 0.080 |



## Modular grating for curves

Made of PP stabilized against UV rays. Assembled by fitting the modules together. Non-slip surface. Other colours available on request. For further information, please contact your AstralPool dealer.

| | Code | Standard Pack | Standard Weight in kg | Standard Volume in $m^3$ |
|---|---|---|---|---|
| Height 22 mm, width 195 mm | **28656** | 470 | 20.84 | 0.082 |
| Height 22 mm, width 245 mm | **28657** | 320 | 18.80 | 0.082 |
| Height 22 mm, width 295 mm | **28658** | 300 | 18.80 | 0.082 |
| Height 22 mm, width 335 mm | **28659** | 250 | 20.84 | 0.082 |
| Height 35 mm, width 195 mm | **28660** | 450 | 26.90 | 0.082 |
| Height 35 mm, width 245 mm | **28661** | 300 | 24.70 | 0.082 |
| Height 35 mm, width 295 mm | **28662** | 290 | 26.61 | 0.082 |
| Height 35 mm, width 335 mm | **28663** | 250 | 22.25 | 0.082 |



## Transversal grating

Made of PP stabilized against UV rays. Fastened together by a pass-through cable (49 units per metre).

| | Code | Standard Pack | Standard Weight in kg | Standard Volume in $m^3$ |
|---|---|---|---|---|
| Height 22 mm, width 195 mm | **00212** | 340 | 11.9 | 0.039 |
| Height 22 mm, width 245 mm | **00213** | 305 | 13.2 | 0.039 |



## Stainless steel plastic coated cable

Ø 2.5 mm for fastening modules together.

| | Code | Standard Pack | Standard Weight in kg | Standard Volume in $m^3$ |
|---|---|---|---|---|
| Stainless steel plastic coated cable | **00214** | 1000 m | 21.0 | 0.036 |



## AISI-316 stainless steel plastic coated cable

Ø 2.5 mm for fastening modules together.

| | Code | Standard Pack | Standard Weight in kg | Standard Volume in $m^3$ |
|---|---|---|---|---|
| AISI-316 stainless steel plastic coated cable | **00215** | 1000 m | 21.0 | 0.036 |

+ info
Further information on **PRODUCTS**
**www.astralpool.com**

# GRILLES FOR OVERFLOW



## Cable locking pins

Made of brass.

| | Code | Standard Pack | Standard Weight in kg | Standard Volume in $m^3$ |
|---|---|---|---|---|
| Cable locking pins | **00216** | 100 | 1.5 | 0.001 |



Other grating colours can be made to order.
For further information, ask your AstralPool dealer.

## Transversal grating tile

Made of PP stabilized against UV rays. Tiles fitted together using a snap fastening system (5 units = 0.975 m).

| | Code | Standard Pack | Standard Weight in kg | Standard Volume in $m^3$ |
|---|---|---|---|---|
| Height 22 mm, width 245 mm | **00217** | 52 | 22.8 | 0.080 |
| Height 22 mm, width 295 mm | **00218** | 45 | 23.1 | 0.080 |
| Height 22 mm, width 335 mm | **00219** | 38 | 22.0 | 0.080 |



## Grating support profile

Suitable for grating heights of 22, 24 and 35 mm. Made of weather resistant plastic. Supplied in 2 m strips. Inside measurements: 24 mm x 37 mm.

Available in other colours. For further information, ask your dealer.

| | Code | Standard Pack | Standard Weight in kg | Standard Volume in $m^3$ |
|---|---|---|---|---|
| Grating support profile | **00224** | 25 | 13.2 | 0.033 |



Other grating colours can be made to order.
For further information, ask your AstralPool dealer.

## 90° corner tiles for overflow channels

Made of white, injection moulded copolymer polypropylene.

| | Code | Standard Pack | Standard Weight in kg | Standard Volume in $m^3$ |
|---|---|---|---|---|
| Height 22 mm, channel width 195 mm | **22379** | 4 | 2.8 | 0.006 |
| Height 22 mm, channel width 245 mm | **22380** | 4 | 3.6 | 0.009 |
| Height 22 mm, channel width 295 mm | **22381** | 4 | 4.8 | 0.012 |
| Height 22 mm, channel width 335 mm | **22382** | 4 | 5.7 | 0.016 |
| Height 35 mm, channel width 195 mm | **22383** | 4 | 3.2 | 0.009 |
| Height 35 mm, channel width 245 mm | **22384** | 4 | 4.1 | 0.014 |
| Height 35 mm, channel width 295 mm | **22385** | 4 | 5.3 | 0.012 |
| Height 35 mm, channel width 335 mm | **22386** | 4 | 6.2 | 0.023 |

# GRILLES FOR OVERFLOW



Complies with Standard **EN 13451-1-3**

Complies with Standards **EN 16582-1** **EN 16713-2**

## Stainless steel longitudinal grating

Longitudinal grating made of stainless steel. A channel 5 mm wider than the grating must be dug so that it is easy to fit.

It is made up of straight sections of AISI-316 stainless steel, 500 mm in length. Straight sections can be made to measure in order to fit the length of any pool.

There are 4 different models depending on the grating used. Height 35 mm

| | Code | Standard Pack | Standard Weight in kg | Standard Volume in $m^3$ |
|---|---|---|---|---|
| Stainless steel 195 mm longitudinal grating | **32415** | - | - | - |
| Stainless steel 245 mm longitudinal grating | **32416** | - | - | - |
| Stainless steel 295 mm longitudinal grating | **32417** | - | - | - |
| Stainless steel 345 mm longitudinal grating | **32418** | - | - | - |



**70956**

## Stainless steel reinforced grating

AISI-316 stainless steel grating, compliant with standard EN: 1345-1:2000. Resistant to salt water. Intended for use in both residential and public pools.

| | Code | Standard Pack | Standard Weight in kg | Standard Volume in $m^3$ |
|---|---|---|---|---|
| Reinforced 252 x 252 mm grating | **70956** | 1 | - | - |
| Reinforced 410 x 410 mm grating | **70957** | 1 | - | - |



**70957**

Complies with Standard **EN 1345-1:2000**





# COMMERCIAL POOLS
# POOL SHELL EQUIPMENT



## Concrete pool

460 • Main drains
462 • Main drain accessories
463 • Drain grilles
464 • ABS inlets
465 • S.S. inlets

## Liner and prefabricated pool

466 • Main drains
468 • Main drain accessories
469 • ABS inlets
471 • S.S. inlets

+ info PDB
Further information on **PRODUCTS**
www.astralpool.com

# CONCRETE POOL - DRAINS

All main drains in the range are supplied with UV protection.
To prevent the risk of suction, install the main drains according to local regulations.
Recommended use:

- Maximum suction rate of 0.5 m/s.
- Install at least 2 main drains, each with a suction capacity able to handle the pool's full flow rate.


56378


56378CL090


56378CL129


56378CL144

## NORM main drain

Range of main drains suitable for public and private swimming pools. Supplied with flat or antivortex grilles. Manufactured in white ABS with UV treatment, fitted with a 2" side outlet and a 1 ½" bottom outlet connection, bottom outlet covered by semi-die cut tab.

| | Code | Standard Pack | Standard Weight in kg | Standard Volume in m³ |
|---|---|---|---|---|
| Flat grating - White | **56378** | 4 | 10.60 | 0.069 |
| Flat grating - Beige | **56378CL090** | 4 | 10.60 | 0.069 |
| Flat grating - Light grey | **56378CL129** | 4 | 10.60 | 0.069 |
| Flat grating - Anthracite grey | **56378CL144** | 4 | 10.60 | 0.069 |
| Antivortex grating - White | **56379** | 4 | 10.60 | 0.069 |
| Antivortex grating - Beige | **56379CL090** | 4 | 10.60 | 0.069 |
| Antivortex grating - Light grey | **56379CL129** | 4 | 10.60 | 0.069 |
| Antivortex grating - Anthracite grey | **56379CL144** | 4 | 10.60 | 0.069 |


56379

Complies with Standard **EN 13451-1-3**

Complies with Standards **EN 16582-1** **EN 16713-2**

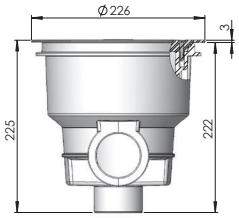


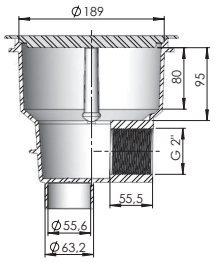


## Main drain with square cover in stainless steel. 2" outlet



2" side outlet. Manufactured in stainless steel. AISI-316. Antivortex lid. Can be used in concrete and prefabricated pools with a 00276 adapter (see page 104). Maximum flow rate: 6 m³/h.

| Code | Standard Pack | Standard Weight in kg | Standard Volume in m³ |
|---|---|---|---|
| **00269** | 1 | 1.14 | 0.01 |

## NORM main drain in polyester and fibreglass - 330 mm x 330 mm



Range of main drains manufactured in polyester resin and fibreglass. Grille in stainless steel or plastic. Optional hydrostatic valve.

| | | | Code | Standard Pack | Standard Weight in kg | Standard Volume in m³ |
|---|---|---|---|---|---|---|
| **Grille in stainless steel** | | | | | | |
| **Outlet connect. to be glued** | **Grille** | **Flow rate** | | | | |
| Ø 75 mm | S.S. | 15 m³/h | **20282N** | 1 | 8 | 0.08 |
| Ø 90 mm | S.S. | 23 m³/h | **20283N** | 1 | 9 | 0.08 |
| Ø 110 mm | S.S. | 27 m³/h | **20284N** | 1 | 10 | 0.08 |
| **Plastic grille** | | | | | | |
| **Outlet connect. to be glued** | **Grille** | **Flow rate** | | | | |
| Ø 75 mm | Plastic | 15 m³/h | **22359N** | 1 | 8 | 0.08 |
| Ø 90 mm | Plastic | 23 m³/h | **22360N** | 1 | 9 | 0.08 |
| Ø 110 mm | Plastic | 28 m³/h | **22361N** | 1 | 10 | 0.08 |
| Ø 125 mm | Plastic | 37 m³/h | **22362N** | 1 | 11 | 0.08 |

Complies with Standard **EN 13451-1/3 2012**

Minimum depth of installation: 1.5 m. Maximum recommended flow rate down drain: 103 m³/h (0.5 m/s).

## CONCRETE POOL - DRAINS





Optional standard American size and antivortex in standard American size

### Model in polyester and fibreglass - 330 mm x 330 mm

With a gelcoat finish. With optional hydrostatic valve.

| Outlet connection to be glued | Grille | Flow rate | Code | Standard Pack | Standard Weight in kg | Standard Volume in m³ |
|---|---|---|---|---|---|---|
| **Grille in stainless steel. AISI-316. Holes < 8 mm** | | | | | | |
| Ø 75 mm | AISI-316 | 16 m³/h | **20282** | 1 | 5 | 0.047 |
| Ø 90 mm | AISI-316 | 22 m³/h | **20283** | 1 | 5 | 0.047 |
| Ø 110 mm | AISI-316 | 33 m³/h | **20284** | 1 | 5 | 0.047 |
| Grille in ABS plastic with protection against UV rays. | | | | | | |
| Ø 75 mm | Plastic | 16 m³/h | **22359** | 1 | 4.5 | 0.034 |
| Ø 90 mm | Plastic | 22 m³/h | **22360** | 1 | 4.5 | 0.034 |
| Ø 110 mm | Plastic | 33 m³/h | **22361** | 1 | 4.5 | 0.034 |
| Ø 125 mm | Plastic | 43 m³/h | **22362** | 1 | 4.5 | 0.034 |

Maximum recommended flow rate in accordance with standard EN 13451-1.



Complies with Standard
**EN 13451-1/3 2012**

Optional:
Standard American sizes

### NORM main drain in polyester and fibreglass - 512 mm x 512 mm

Range of drains manufactured in polyester resin and fibreglass. Grille in AISI-316 stainless steel or plastic. Optional hydrostatic valve.

| Outlet connection to be glued | Grille | Flow rate | Code | Standard Pack | Standard Weight in kg | Standard Volume in m³ |
|---|---|---|---|---|---|---|
| **Grille in stainless steel** | | | | | | |
| Ø 110 mm | S.S. | 42 m³/h | **20285N** | 1 | 16 | 0.23 |
| Ø 125 mm | S.S. | 51 m³/h | **20286N** | 1 | 17 | 0.23 |
| Ø 140 mm | S.S. | 66 m³/h | **20287N** | 1 | 18 | 0.23 |
| Ø 160 mm | S.S. | 95 m³/h | **20288N** | 1 | 19 | 0.23 |
| Ø 200 mm | S.S. | 103 m³/h | **20289N** | 1 | 20 | 0.23 |
| **Plastic grille** | | | | | | |
| Ø 110 mm | Plastic | 42 m³/h | **28709N** | 1 | 15 | 0.23 |
| Ø 125 mm | Plastic | 51 m³/h | **28710N** | 1 | 16 | 0.23 |
| Ø 140 mm | Plastic | 66 m³/h | **28711N** | 1 | 17 | 0.23 |
| Ø 160 mm | Plastic | 95 m³/h | **28712N** | 1 | 18 | 0.23 |
| Ø 200 mm | Plastic | 103 m³/h | **28713N** | 1 | 19 | 0.23 |

Minimum depth of installation: 1.5 m. Maximum recommended flow rate down drain: 103 m³/h (0.5 m/s).

+ info PDB
Further information on **PRODUCTS**
www.astralpool.com

# CONCRETE POOL - DRAINS





## Model in polyester and fibreglass - 512 mm x 512 mm

With a gelcoat finish. With optional hydrostatic valve.

| Outlet connection to be glued | Grille | Flow rate | Code | Standard Pack | Standard Weight in kg | Standard Volume in m³ |
|---|---|---|---|---|---|---|
| **Grille in AISI-316 stainless steel. Holes < 8 mm** | | | | | | |
| Ø 110 mm | AISI-316 | 33 m³/h | **20285** | 1 | 11.5 | 0.132 |
| Ø 125 mm | AISI-316 | 43 m³/h | **20286** | 1 | 11.5 | 0.132 |
| Ø 140 mm | AISI-316 | 54 m³/h | **20287** | 1 | 11.5 | 0.132 |
| Ø 160 mm | AISI-316 | 70 m³/h | **20288** | 1 | 11.5 | 0.132 |
| Ø 200 mm | AISI-316 | 100 m³/h | **20289** | 1 | 11.5 | 0.132 |
| **Grille in ABS plastic with protection against UV rays.** | | | | | | |
| Ø 110 mm | Plastic | 33 m³/h | **28709** | 1 | 11.5 | 0.132 |
| Ø 125 mm | Plastic | 43 m³/h | **28710** | 1 | 11.5 | 0.132 |
| Ø 140 mm | Plastic | 54 m³/h | **28711** | 1 | 11.5 | 0.132 |
| Ø 160 mm | Plastic | 70 m³/h | **28712** | 1 | 11.5 | 0.132 |
| Ø 200 mm | Plastic | 100 m³/h | **28713** | 1 | 11.5 | 0.132 |

Maximum recommended flow rate in accordance with standard EN 13451-1.

# CONCRETE POOL - DRAIN ACCESSORIES



## Hydrostatic valve

To alleviate the pressure that can build up under the pool shell due to groundwater, it is recommended that a hydrostatic valve and a drainage pipe be fitted to the main drain. Hydrostatic valve to be fitted to the 2" bottom outlet on main drains. Made of white ABS, with stainless steel screw and spring. 1½" male thread.

| Code | Standard Pack | Standard Weight in kg | Standard Volume in m³ |
|---|---|---|---|
| **00277** | 4 | 1.0 | 0.003 |



## Drainage pipe

Drainage pipe with 1½" BSP thread connection for main drains with code numbers 01466, 27837 and 27839. Made of ABS.

| Code | Standard Pack | Standard Weight in kg | Standard Volume in m³ |
|---|---|---|---|
| **21581** | 24 | 3.54 | 0.021 |

# CONCRETE POOL - DRAIN GRILLES



## Flush-fit antivortex cover

Special flush-fit design that enables pool cleaners to go over it without blocking it up. Smooth slopes.

The 415 mm x 415 mm cover (25344) can be fitted to the following main drains:

| With stainless steel grille: | With plastic grille: |
|---|---|
| -20282 | -22359 |
| -20283 | -22360 |
| -20284 | -22361 |
| | -22362 |

The 570 mm x 570 mm cover (28556) can be fitted to the following main drains:

| With stainless steel grille: | With plastic grille: |
|---|---|
| -20285 | -28709 |
| -20286 | -28710 |
| -20287 | -28711 |
| -20288 | -28712 |

| | Code | Standard Pack | Standard Weight in kg | Standard Volume in $m^3$ |
|---|---|---|---|---|
| 415 mm x 415 mm, Height: 70 mm | **25344** | 1 | 2.25 | 0.012 |
| 570 mm x 570 mm, Height: 60 mm | **28556** | 1 | 4.00 | 0.032 |

Complies with Standard
**EN 13451-1-3**



## Drain grille in stainless steel

Designed for concrete pools. Support frame and grille in polished stainless steel. Supplied with fixing screws. Other sizes can be made to order.

| | | Code | Standard Pack | Standard Weight in kg | Standard Volume in $m^3$ |
|---|---|---|---|---|---|
| **AISI-304** | | | | | |
| **Size (mm)** | **Max. recommended flow rate** | | | | |
| **200 x 200** | 15 $m^3/h$ (0.5 m/s) | **00284** | 1 | 1.2 | 0.01 |
| **300 x 300** | 43 $m^3/h$ (0.5 m/s) | **00285** | 1 | 2.2 | 0.01 |
| **400 x 400** | 83 $m^3/h$ (0.5 m/s) | **00286** | 1 | 4.0 | 0.03 |
| **500 x 500** | 136 $m^3/h$ (0.5 m/s) | **00287** | 1 | 4.5 | 0.04 |
| **AISI-316** | | | | | |
| **Size (mm)** | **Max. recommended flow rate** | | | | |
| **200 x 200** | 15 $m^3/h$ (0.5 m/s) | **30764** | 1 | 1.2 | 0.01 |
| **300 x 300** | 43 $m^3/h$ (0.5 m/s) | **30765** | 1 | 2.2 | 0.01 |
| **400 x 400** | 83 $m^3/h$ (0.5 m/s) | **30766** | 1 | 4.0 | 0.03 |
| **500 x 500** | 136 $m^3/h$ (0.5 m/s) | **30767** | 1 | 4.5 | 0.04 |

Complies with Standard
**EN 13451-1-3**

Complies with Standards
**EN 16582-1**
**EN 16713-2**

+ info
Further information on **PRODUCTS**
www.astralpool.com

# CONCRETE POOL - ABS INLETS



Complies with Standards
**EN 16582-1**
**EN 16713-2**

## Return inlet/suction nozzle for high flow rates

Return inlet for large flow rates that can also be used as a suction nozzle. Maximum suction flow rate of 30m³/h for a maximum flow rate speed of 4 m/s. Maximum suction flow rate of 5 m³/h for a maximum flow rate speed of 0.5 m/s. PVC body. Connection for Ø 75 or Ø 90mm pipe. Inlets can be installed into bushing 43590 (see page 231). Grille can be adjusted in any direction.

| | Code | Standard Pack | Standard Weight in kg | Standard Volume in m³ |
|---|---|---|---|---|
| Return inlet/suction nozzle for large flows and concrete pools | **41520** | 16 | 4.20 | 0.021 |

## NORM return inlets



Complies with Standard
**13451-1-3**

Range of inlets suitable for installation in public and private pools. Manufactured in white ABS with UV treatment.

| | Code | Standard Pack | Standard Weight in kg | Standard Volume in m³ |
|---|---|---|---|---|
| NORM return inlet for concrete pools | **56498** | 24 | 4.5 | 0.020 |

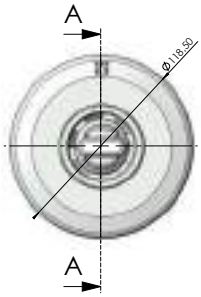


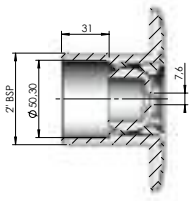

SECCIÓN A-A




## Pool floor return inlet

All-in-one return inlet and suction nozzle. Adjustable flow rate. Made of ABS plastic and screws in stainless steel. Maximum recommended flow rate compliant with standard EN 13451-1: 12 m³/h.

| | Code | Standard Pack | Standard Weight in kg | Standard Volume in m³ |
|---|---|---|---|---|
| Outer 2" thread, int. Ø 50 mm - White | **00303** | 24 | 5.0 | 0.020 |
| Outer 2" thread, int. Ø 50 mm - Beige | **00303CL090** | 24 | 5.0 | 0.020 |
| Outer 2" thread, int. int. Ø 50 mm - Light grey | **00303CL129** | 24 | 5.0 | 0.020 |
| Outer 2" thread, int. Ø 50 mm - Anthracite grey | **00303CL144** | 24 | 5.0 | 0.020 |
| To glue onto Ø 63 mm PN 6, inner Ø 50 mm | **20140** | 20 | 4.4 | 0.021 |

Complies with Standard
**13451-1-3**

Complies with Standards
**EN 16582-1**
**EN 16713-2**



## 3" adjustable pool floor return inlet

Made of white ABS plastic. Suction. Flow rate adjusted by turning the grille. Suction surface area: 0.015 m². Outer Ø 295 mm wall. Flow rate (0.4 m/s) 20 m³/h. Max. recommended flow rate compliant with standard EN 13451-1: 26 m³/h (0.5 m/s.).

| | Code | Standard Pack | Standard Weight in kg | Standard Volume in m³ |
|---|---|---|---|---|
| Grille in AISI-304 stainless steel | **08317** | 2 | 2.65 | 0.047 |
| Grille in white ABS | **11796** | 2 | 2.65 | 0.047 |

## CONCRETE POOL - ABS INLETS



22353



22353CL090



22353CL129



22353CL144

Complies with Standard **13451-1-3**

Complies with Standards **EN 16582-1** **EN 16713-2**

### Pool floor return inlet with swivel joint

Swivel body in PVC. Cover in ABS. Adjuster screw in POM. Maximum flow rate of 10 m³/h. Fits to Ø 75 mm piping and wall conduit with code number 21248.

| | Code | Standard Pack | Standard Weight in kg | Standard Volume in m³ |
|---|---|---|---|---|
| Pool floor inlet - White | **22353** | 24 | 4.1 | 0.022 |
| Pool floor inlet - Beige | **22353CL090** | 24 | 4.1 | 0.022 |
| Pool floor inlet - Light grey | **22353CL129** | 24 | 4.1 | 0.022 |
| Pool floor inlet - Anthracite grey | **22353CL144** | 24 | 4.1 | 0.022 |



### Suction inlet

To be glued to a Ø 63 mm pipe. Body and grille in ABS plastic, screws in stainless steel. Its characteristics make this nozzle particularly suitable for overflow channels. Maximum flow rate: 7 m³/h.

| Code | Standard Pack | Standard Weight in kg | Standard Volume in m³ |
|---|---|---|---|
| **00302** | 12 | 3.1 | 0.016 |

## CONCRETE POOL - STAINLESS STEEL INLETS



Complies with Standard **EN 13451-1-3**

Complies with Standards **EN 16582-1** **EN 16713-2**

### Adjustable pool floor return inlet

2" external thread. Made of AISI-316 stainless steel. Can be fitted in concrete and prefabricated pools. The water flow can be adjusted by loosening or tightening the central screw. Max. recommended flow rate complaint with standard EN 13451-3: 14 m³/h.

| Code | Standard Pack | Standard Weight in kg | Standard Volume in m³ |
|---|---|---|---|
| **15839** | 1 | 0.9 | 0.002 |



Complies with Standard **EN 13451-1-3**

Complies with Standards **EN 16582-1** **EN 16713-2**

### Adjustable return inlet

Manufactured in chrome-plated brass. Grille in AISI-316 stainless steel.

| | Code | Standard Pack | Standard Weight in kg | Standard Volume in m³ |
|---|---|---|---|---|
| Max. flow rate: 21 m³/h 2" inner thread | **00312** | 12 | 7.0 | 0.013 |
| Max. flow rate: 40 m³/h 3" inner thread | **00313** | 6 | 10.0 | 0.014 |

+ info
PDB
Further information on **PRODUCTS**
**www.astralpool.com**

# LINER AND PREFABRICATED POOL - DRAINS

All main drains in the range are supplied with UV protection.
To prevent the risk of suction, install the main drains according to local regulations.
Recommended use:

- Maximum suction rate of 0.5 m/s.
- Install at least 2 main drains, each with a suction capacity able to handle the pool's full flow rate.


**56380**


**56382CL090**


**56382**


**56382CL144**


**56382CL129**

Complies with Standard **EN 13451-1-3**

Complies with Standards **EN 16582-1** **EN 16713-2**

## NORM main drain

New range of main drains suitable for installation in public and private pools. Supplied with flat or antivortex grilles. Manufactured in white ABS with UV treatment, fitted with a 2" side outlet and a 1 ½" bottom outlet connection, bottom outlet covered by semi-die cut tab.

| | Code | Standard Pack | Standard Weight in kg | Standard Volume in m³ |
|---|---|---|---|---|
| Flat grating with inserts - White | **56380** | 4 | 10.60 | 0.069 |
| Flat grating with inserts - Beige | **56380CL090** | 4 | 10.60 | 0.069 |
| Flat grating with inserts - Light grey | **56380CL129** | 4 | 10.60 | 0.069 |
| Flat grating with inserts - Anthracite grey | **56380CL144** | 4 | 10.60 | 0.069 |
| Flat grating without inserts - White | **56381** | 4 | 10.60 | 0.069 |
| Flat grating without inserts - Beige | **56381CL090** | 4 | 10.60 | 0.069 |
| Flat grating without inserts - Light grey | **56381CL129** | 4 | 10.60 | 0.069 |
| Flat grating without inserts - Anthracite grey | **56381CL144** | 4 | 10.60 | 0.069 |
| Antivortex grating with inserts - White | **56382** | 4 | 10.60 | 0.069 |
| Antivortex grating with inserts - Beige | **56382CL090** | 4 | 10.60 | 0.069 |
| Antivortex grating with inserts - Light grey | **56382CL129** | 4 | 10.60 | 0.069 |
| Antivortex grating with inserts - Anthracite grey | **56382CL144** | 4 | 10.60 | 0.069 |
| Antivortex grating without inserts - White | **56383** | 4 | 10.60 | 0.069 |
| Antivortex grating without inserts - Beige | **56383CL090** | 4 | 10.60 | 0.069 |
| Antivortex grating without inserts - Light grey | **56383CL129** | 4 | 10.60 | 0.069 |
| Antivortex grating without inserts - Anthracite grey | **56383CL144** | 4 | 10.60 | 0.069 |



Complies with Standard **13451-1-3**

## NORM main drain in polyester and fibreglass - 355 mm x 355 mm

Range of main drains manufactured in polyester resin and fibreglass. Grille in stainless steel or plastic. Optional hydrostatic valve.

| Outlet connection to be glued | Grille | Flow rate | Code | Standard Pack | Standard Weight in kg | Standard Volume in m³ |
|---|---|---|---|---|---|---|
| Grille in stainless steel | | | | | | |
| Ø 75 mm | Stainless steel | 15 m³/h | **20074N** | 1 | 8 | 0.08 |
| Ø 90 mm | Stainless steel | 23 m³/h | **20075N** | 1 | 9 | 0.08 |
| Ø 110 mm | Stainless steel | 27 m³/h | **20290N** | 1 | 10 | 0.08 |
| Plastic grille | | | | | | |
| Ø 75 mm | Plastic | 15 m³/h | **22416N** | 1 | 8 | 0.08 |
| Ø 90 mm | Plastic | 23 m³/h | **22417N** | 1 | 9 | 0.08 |
| Ø 110 mm | Plastic | 28 m³/h | **22418N** | 1 | 10 | 0.08 |
| Ø 125 mm | Plastic | 37 m³/h | **22419N** | 1 | 11 | 0.08 |

Minimum depth of installation: 1.5 m.
Maximum recommended flow rate down drain: 103 m³/h (0.5 m/s).

Optional standard American size and antivortex in standard American size

# LINER AND PREFABRICATED POOL - DRAINS



Complies with Standard **13451-1-3**

Optional standard American size and antivortex in standard American size

## NORM main drain in polyester and fibreglass - 515 mm x 515 mm

Range of main drains manufactured in polyester resin and fibreglass. Grille in stainless steel or plastic. Optional hydrostatic valve.

Grille in stainless steel

| Outlet connection to be glued | Grille | Flow rate | Code | Standard Pack | Standard Weight in kg | Standard Volume in m³ |
|---|---|---|---|---|---|---|
| Ø 110 mm | Stainless steel | 42 m³/h | **20076N** | 1 | 16 | 0.23 |
| Ø 125 mm | Stainless steel | 51 m³/h | **20077N** | 1 | 17 | 0.23 |
| Ø 140 mm | Stainless steel | 66 m³/h | **20078N** | 1 | 18 | 0.23 |
| Ø 160 mm | Stainless steel | 95 m³/h | **20079N** | 1 | 19 | 0.23 |
| Ø 200 mm | Stainless steel | 103 m³/h | **20291N** | 1 | 20 | 0.23 |

Plastic grille

| Outlet connection to be glued | Grille | Flow rate | Code | Standard Pack | Standard Weight in kg | Standard Volume in m³ |
|---|---|---|---|---|---|---|
| Ø 110 mm | Plastic | 42 m³/h | **28722N** | 1 | 15 | 0.23 |
| Ø 125 mm | Plastic | 51 m³/h | **28723N** | 1 | 16 | 0.23 |
| Ø 140 mm | Plastic | 66 m³/h | **28724N** | 1 | 17 | 0.23 |
| Ø 160 mm | Plastic | 95 m³/h | **28725N** | 1 | 18 | 0.23 |
| Ø 200 mm | Plastic | 103 m³/h | **28726N** | 1 | 19 | 0.23 |

Minimum depth of installation: 1.5 m.
Maximum recommended flow rate down drain: 103 m³/h (0.5 m/s).





Optional:
Standard American sizes

## Main drain in polyester and fibreglass - 355 mm x 355 mm

Made of fibreglass-reinforced polyester. With a gelcoat finish. Comes with gaskets, flange and screws. Holes < 8 mm. Outlet connection to be glued. With optional hydrostatic valve.

Grille in AISI-316 stainless steel

| Outlet connection to be glued | Grille | Flow rate | Code | Standard Pack | Standard Weight in kg | Standard Volume in m³ |
|---|---|---|---|---|---|---|
| Ø 75 mm | AISI-316 | 16 m³/h | **20074** | 1 | 6.5 | 0.047 |
| Ø 90 mm | AISI-316 | 22 m³/h | **20075** | 1 | 6.5 | 0.047 |
| Ø 110 mm | AISI-316 | 33 m³/h | **20290** | 1 | 6.5 | 0.047 |

Max. recommended flow rate: 33.5 m³/h (0.5 m/s)
Recommended flow rate: 20 m³/h (0.3 m/s)

Grille in ABS plastic with protection against UV rays.

| Outlet connection to be glued | Grille | Flow rate | Code | Standard Pack | Standard Weight in kg | Standard Volume in m³ |
|---|---|---|---|---|---|---|
| Ø 75 mm | Plastic | 18 m³/h | **22416** | 1 | 6.5 | 0.047 |
| Ø 90 mm | Plastic | 27 m³/h | **22417** | 1 | 6.5 | 0.047 |
| Ø 110 mm | Plastic | 42 m³/h | **22418** | 1 | 6.5 | 0.047 |
| Ø 125 mm | Plastic | 45 m³/h | **22419** | 1 | 6.5 | 0.047 |

Max. recommended flow rate: 45 m³/h (0.5 m/s)
Recommended flow rate: 27 m³/h (0.3 m/s)

+ info PDB
Further information on **PRODUCTS**
www.astralpool.com

# LINER AND PREFABRICATED POOL - DRAINS



## Main drain in polyester and fibreglass - 515 mm x 515 mm

With a gelcoat finish. Grille in AISI-316 stainless steel. Comes with gaskets, flanges and screws. Holes < 8 mm. Outlet connection to be glued. Recommended flow rate: 62 m³/h (0.3 m/s). Max. recommended flow rate: 103 m³/h (0.5 m/s.). With optional hydrostatic valve.

Grille in AISI-316 stainless steel

| Outlet connection to be glued | Grille | Flow rate | Code | Standard Pack | Standard Weight in kg | Standard Volume in m³ |
|---|---|---|---|---|---|---|
| Ø 110 mm | AISI-316 | 42 m³/h | **20076** | 1 | 1.4 | 0.132 |
| Ø 125 mm | AISI-316 | 51 m³/h | **20077** | 1 | 1.4 | 0.132 |
| Ø 140 mm | AISI-316 | 66 m³/h | **20078** | 1 | 1.4 | 0.132 |
| Ø 160 mm | AISI-316 | 95 m³/h | **20079** | 1 | 1.4 | 0.132 |
| Ø 200 mm | AISI-316 | 103 m³/h | **20291** | 1 | 1.4 | 0.132 |

Grille in ABS plastic with protection against UV rays.

| Outlet connection to be glued | Grille | Flow rate | Code | Standard Pack | Standard Weight in kg | Standard Volume in m³ |
|---|---|---|---|---|---|---|
| Ø 110 mm | Plastic | 42 m³/h | **28722** | 1 | 1.4 | 0.132 |
| Ø 125 mm | Plastic | 51 m³/h | **28723** | 1 | 1.4 | 0.132 |
| Ø 140 mm | Plastic | 66 m³/h | **28724** | 1 | 1.4 | 0.132 |
| Ø 160 mm | Plastic | 95 m³/h | **28725** | 1 | 1.4 | 0.132 |
| Ø 200 mm | Plastic | 103 m³/h | **28726** | 1 | 1.4 | 0.132 |

# LINER AND PREFABRICATED POOL - MAIN DRAIN ACCESSORIES



## Hydrostatic valve

To alleviate the pressure that can build up under the pool shell due to groundwater, it is recommended that a hydrostatic valve and a drainage pipe be fitted to the main drain. Hydrostatic valve to be fitted to the 2" bottom outlet on main drains. Made of white ABS, with stainless steel screw and spring. 1½" male thread.

| Code | Standard Pack | Standard Weight in kg | Standard Volume in m³ |
|---|---|---|---|
| **00277** | 4 | 1.0 | 0.003 |



## Drainage pipe

Drainage pipe with 1½" BSP thread connection for main drains with code numbers 00270, 07880, 27838, 26197 and 27125. Made of ABS.

| Code | Standard Pack | Standard Weight in kg | Standard Volume in m³ |
|---|---|---|---|
| **21581** | 24 | 3.54 | 0.021 |

# LINER AND PREFABRICATED POOL - MAIN DRAIN ACCESSORIES







## Flush-fit antivortex cover

Special flush-fit design that enables pool cleaners to go over it without blocking it up.

The 415 mm x 415 mm cover (25344) can be fitted to the following main drains:

| With stainless steel grille: | With plastic grille: |
|---|---|
| -20074 | -22416 |
| -20075 | -22417 |
| -20290 | -22418 |
| | -22419 |

The 570 mm x 570 mm cover (28556) can be fitted to the following main drains:

| With stainless steel grille: | With plastic grille: |
|---|---|
| -20076 | -28722 |
| -20077 | -28723 |
| -20078 | -28724 |
| -20079 | -28725 |

| | Code | Standard Pack | Standard Weight in kg | Standard Volume in $m^3$ |
|---|---|---|---|---|
| 415 mm x 415 mm. Height: 70 mm | **25344** | 1 | 2.25 | 0.012 |
| 570 mm x 570 mm. Height: 60 mm | **28556** | 1 | 3.90 | 0.015 |

Complies with Standard
**EN 13451-1:2000**

# LINER AND PREFABRICATED POOL - ABS INLETS



**56499**



**56499CL090**



**56499CL129**



**56499CL144**

## NORM return inlets

Range of inlets suitable for installation in public and private pools. Manufactured in white ABS with UV treatment.

| | Code | Standard Pack | Standard Weight in kg | Standard Volume in $m^3$ |
|---|---|---|---|---|
| For prefabricated/liner pools - White | **56499** | 12 | 4.5 | 0.020 |
| For prefabricated/liner pools - Beige | **56499CL090** | 12 | 4.5 | 0.020 |
| For prefabricated/liner pools - Light grey | **56499CL129** | 12 | 4.5 | 0.020 |
| For prefabricated/liner pools - Anthracite grey | **56499CL144** | 12 | 4.5 | 0.020 |
| For prefabricated pools - White | **56500** | 24 | 4.5 | 0.020 |
| For prefabricated pools - Beige | **56500CL090** | 24 | 4.5 | 0.020 |
| For prefabricated pools - Light grey | **56500CL129** | 24 | 4.5 | 0.020 |
| For prefabricated pools - Anthracite grey | **56500CL144** | 24 | 4.5 | 0.020 |

Complies with Standard
**13451-1-3**

+ info PDB
Further information on **PRODUCTS**
www.astralpool.com

# LINER AND PREFABRICATED POOL - ABS INLETS



**00340**



**00340CL090**



**00340CL129**



**00340CL144**

## Pool floor return inlet for prefabricated pools

Return nozzle. Comes with gaskets, flanges and screws. Adjustable flow rate. Max. flow rate: 12 m³/h.

| | Code | Standard Pack | Standard Weight in kg | Standard Volume in m³ |
|---|---|---|---|---|
| 2" outer thread and internal Ø 50 mm - White | **00340** | 12 | 5.4 | 0.020 |
| 2" outer thread and internal Ø 50 mm - Beige | **00340CL090** | 12 | 5.4 | 0.020 |
| 2" outer thread and internal Ø 50 mm - Light grey | **00340CL129** | 12 | 5.4 | 0.020 |
| 2" outer thread and internal Ø 50 mm - Anthracite grey | **00340CL144** | 12 | 5.4 | 0.020 |
| 2" outer thread with NPT outlets | **11584** | 12 | 5.4 | 0.020 |
| To be glued Ø 63 mm PN 6 outer wall, Ø 50 mm inner | **20139** | 12 | 5.4 | 0.021 |

Complies with Standard **13451-1-3**

Complies with Standards **EN 16582-1** **EN 16713-2**

## BCN03 pool floor return inlet



Adjustable pool floor return inlet for liner pools. Designed to be glued to the inside of PN6 and PN10 piping. Made of white ABS, with self-tapping screws or with metal inserts. Plastic or stainless steel flange, depending on the model. Maximum flow rate: 9.5 m³/h.

| | Code | Standard Pack | Standard Weight in kg | Standard Volume in m³ |
|---|---|---|---|---|
| PN6 self-tapping plastic flange | **28230** | 12 | 3.25 | 0.031 |
| With PN6 plastic flange inserts | **28231** | 12 | 3.55 | 0.031 |
| PN10 self-tapping stainless steel flange | **28501** | 12 | 4.24 | 0.031 |
| With PN10 stainless steel inserts | **28502** | 12 | 4.54 | 0.031 |

Complies with Standard **13451-1-3**

Complies with Standards **EN 16582-1** **EN 16713-2**

## BCN03 adjustable pool floor return inlet



Pool floor return inlet for liner pools. Thanks to the adjustable feature, its installation in the pool floor is made extremely easy as it can be fitted after the concrete has been laid with wall conduit 43590.

| | Code | Standard Pack | Standard Weight in kg | Standard Volume in m³ |
|---|---|---|---|---|
| With plastic flange inserts | **43586** | 12 | 2.04 | 0.033 |
| Plastic self-tapping flange | **43587** | 12 | 2.04 | 0.033 |
| With stainless steel flange inserts | **43588** | 12 | 2.04 | 0.033 |
| Self-tapping stainless steel flange | **43589** | 12 | 2.04 | 0.033 |

Complies with Standard **13451-1-3**

Complies with Standards **EN 16582-1** **EN 16713-2**

## 3" adjustable pool floor return inlet



Made of white ABS. Suction. Comes with gaskets, flanges and screws. Flow rate adjusted by turning the grille. Suction surface area: 0.015 m². Flow rate at 0.4 m/s: 20 m³/h. Max. recommended flow rate: 26 m³/h. (0.5 m/s.).

| | Code | Standard Pack | Standard Weight in kg | Standard Volume in m³ |
|---|---|---|---|---|
| Grille in AISI-304 stainless steel | **08316** | 2 | 2.65 | 0.047 |
| Grille in white ABS | **11795** | 2 | 2.65 | 0.047 |

## LINER AND PREFABRICATED POOL - ABS INLETS



### Double gasket kit

Kit made up of a double gasket and the screws necessary for the installation of nozzles in panel pools. Made of TPE, the kit enables the installation of various accessories in pool shells and protects the panelling from coming into contact with water. Easy to install. Prevents corrosion of the panelling in the area that has been die cut.

| | Code | Standard Pack | Standard Weight in kg | Standard Volume in $m^3$ |
|---|---|---|---|---|
| Inserts for nozzles | **43455-0500** | 80 | - | 0.035 |



### Return inlet/suction nozzle for high flow rates

Return inlet for large flow rates that can also be used as a suction nozzle. Maximum suction flow rate of $30m^3/h$ for a maximum flow rate speed of 4 m/s. Maximum suction flow rate of 5 $m^3/h$ for a maximum flow rate speed of 0.5 m/s. PVC body. Connection for Ø 75 or Ø 90 mm pipe. Inlets can be installed into bushing 43590.

| | Code | Standard Pack | Standard Weight in kg | Standard Volume in $m^3$ |
|---|---|---|---|---|
| Panel pools | **41518** | 10 | 5.50 | 0.021 |
| Prefabricated pools | **41521** | 12 | 4.20 | 0.021 |



### Suction nozzle for overflow pools with liner

PVC body. Maximum flow rate of 7 $m^3/h$ for a maximum flow rate velocity of 0.5 m/s. Connection for Ø 75 or Ø 90 piping. Nozzle with double gasket. Thanks to the design of the flange, the nozzle is able to take in all of the water in the overflow channel.

| Code | Standard Pack | Standard Weight in kg | Standard Volume in $m^3$ |
|---|---|---|---|
| **41519** | 12 | 4.83 | 0.021 |

## LINER AND PREFABRICATED POOL - STAINLESS STEEL INLETS



### Adjustable pool floor return inlet

2" external thread. Made of AISI-316 stainless steel. Can be fitted in concrete and prefabricated pools. The water flow can be adjusted by loosening or tightening the central screw. Max. recommended flow rate complaint with standard EN 13451-3: 14 $m^3/h$.

| Code | Standard Pack | Standard Weight in kg | Standard Volume in $m^3$ |
|---|---|---|---|
| **15839** | 1 | 0.9 | 0.002 |

Complies with Standard **EN 13451-1-3**

Complies with Standards **EN 16582-1** **EN 16713-2**





# COMMERCIAL POOLS
# BUILDING SOLUTIONS


474 • Modular prefabricated pools
476 • Modular prefabricated pools - One-off projects
477 • Inoxpool
480 • SkyPool Commercial Pools
483 • Bluespring




ASTRALPOOL

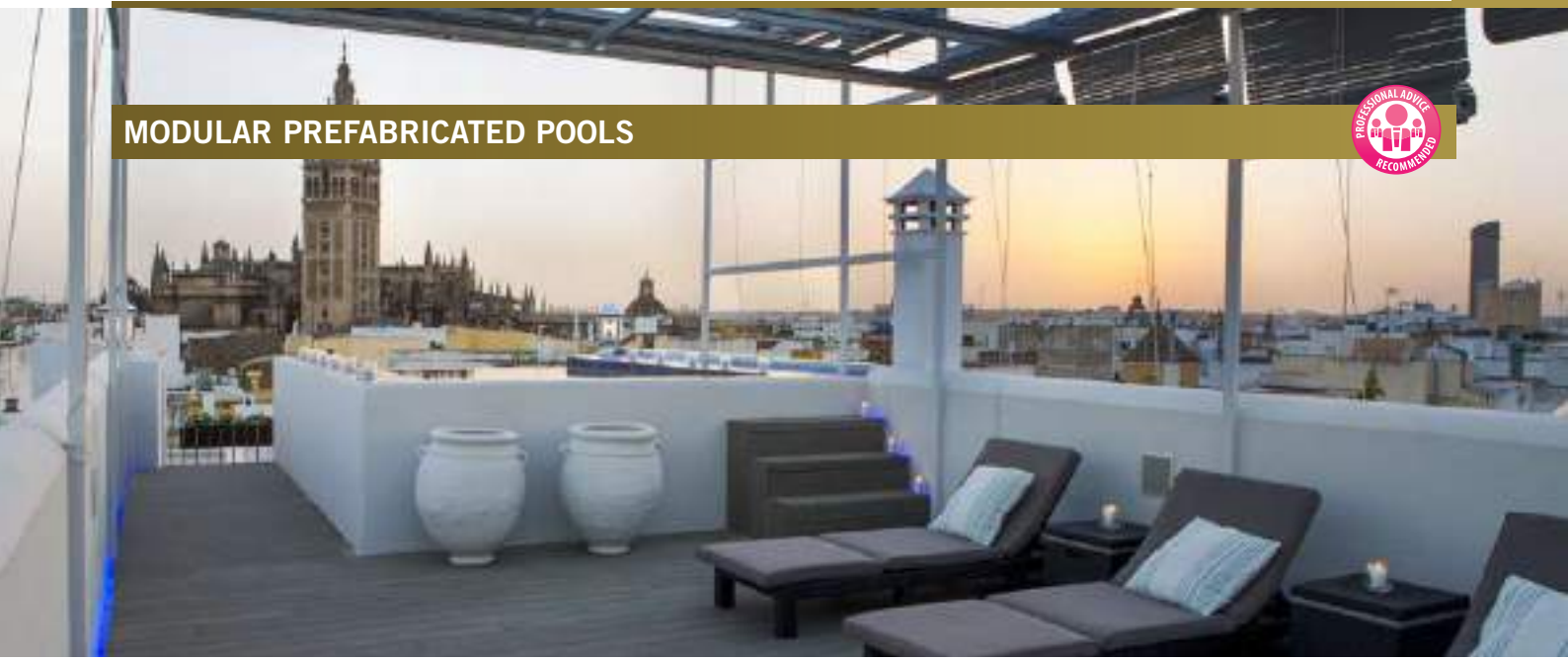

## MODULAR PREFABRICATED POOLS

Freestanding modules for pools and spas, with a reinforced, waterproof composite, ready for the final coating.

Prefabricated modules with all accessories and wall conduits to ensure watertightness in the event of vibrations and water hammer.

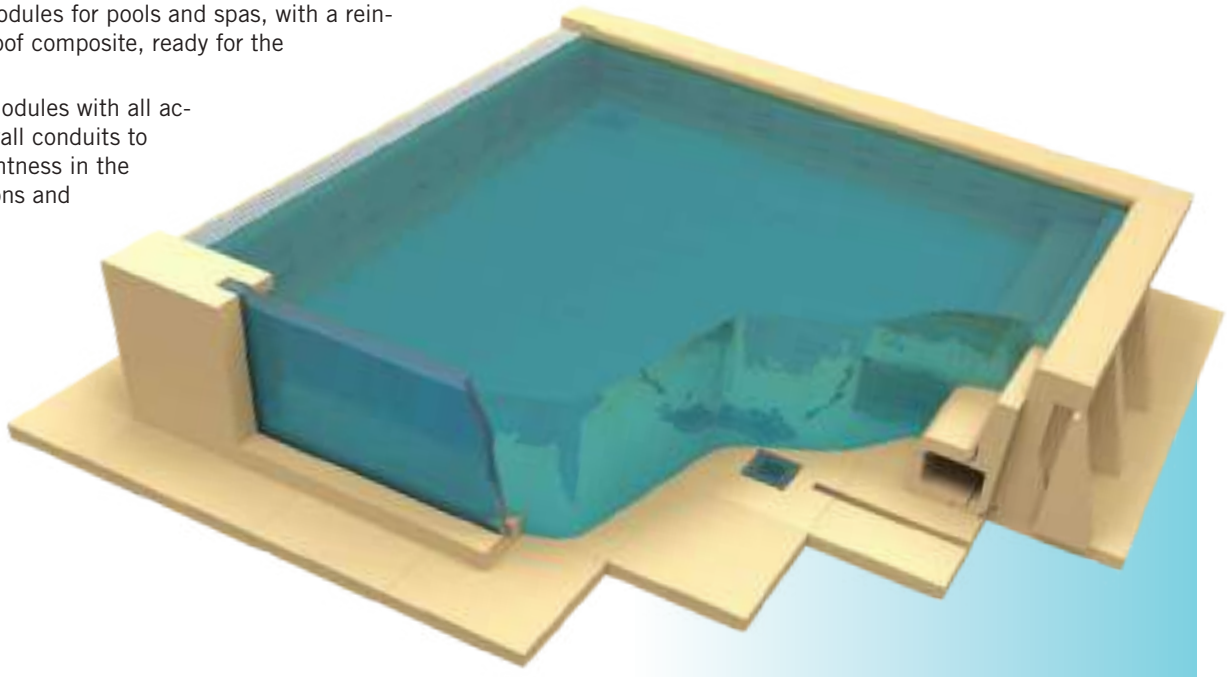

The thermal expansion coefficient of our prefabricated modules is far superior to that of concrete, as a result of which they do not crack over time because structural movement due to expansion and contraction are absorbed.

Ideal for refurbishments, roof tops, basements, etc. Their modular design makes them extremely easy to transport and work freely on the building site.

Exclusive designs without any restrictions, thanks to our computer-controlled systems that enable our clients to come up with their own designs without the need for casts, thus avoiding manual errors.

The prefabricated component parts make it possible to build and refurbish pools to the designers exact specifications, as well as enabling a pool to have exactly the same finish as a traditional one.

- Installation on complex sites
- Modular and freestanding
- Energy savings
- Resistant to water load
  Lightweight framework
- Prefabricated system

## MODULAR PREFABRICATED POOLS




The top finish can be directly applied to the insulation material, which protects it from potential condensation between gaps that give rise to the proliferation of micro-organisms organisms that are a health hazard for humans.

Hardly any power loss (λ= 0,033 W/mK) in comparison with concrete (λ= 2,30 W/mK), which means it pays for itself in a very short space of time.



**To ask for a quote, contact your area sales rep.**

### COMPARATIVE POWER CONSUMPTION TABLE

86% savings

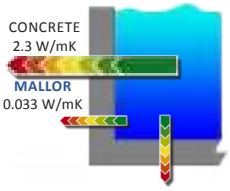


Energy conductivity figures as shown in the Spanish Technical Building Code (CTE).

### LIGHTWEIGHT FRAMEWORK

2320kg lighter per m³

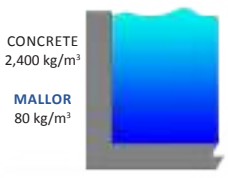


### COMPARATIVE WATER VOLUME TABLE

920kg lighter per m³

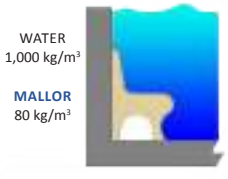


Volume of compact bench 0.27 m³

## MODULAR PREFABRICATED POOLS - ONE-OFF PROJECTS

### IBEROSTAR BAHIA PALMA pool

74,520 kg concrete
2,484 kg prefabricated modules
**31.05 m³**









### CALDEA KIDS pool

85,104 kg concrete
2,837 kg prefabricated modules
**35.46 m³**










## INOXPOOL

### InoxPool

Constructed in one piece of AISI-316L satin stainless steel. Thickness of 2 mm. With overflow channel. Non-slip floor. Hydraulic pre-installation included. Ready to connect. Easy installation, without building work.

Total security and quality. In order to satisfy all your needs we have designed these models of stainless steel pools for those looking for an elegant and sober lifestyle. The quality of their materials and finishes set them apart. They are a gift for the senses!

2 Differents models:

**COMFORT**



**SPORT**







## INOXPOOL

### Model comparison

New

| | 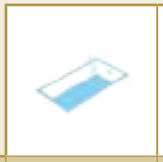 | |  | |  | |  |  |  |
|---|---|---|---|---|---|---|---|---|---|
| | 5 x 3 x 1.2 m | 7 x 3 x 1.2 m | | 9 x 3 x 1.2 m | | 12 x 3 x 1.2 m | | | |
| **MODELS** | **Sport** | **Comfort** | **Sport** | **Comfort** | **Sport** | **Comfort** | **Sport** | | |
| **Code** | **71503** | **71509** | **71510** | **71516** | **71517** | **71523** | **71524** | | |
| **General specifications** | | | | | | | | | |
| Internal dimensions (m) | 5 x 2.85 x 1.2 | 7 x 2.85 x 1.2 | | 8.84 x 2.85 x 1.2 | | 11.84 x 2.85 x 1.2 | | | |
| External dimensions (m) | 5.7 X 3.6 X 1.3 | 7.7 X 3.6 X 1.3 | | 9.6 X 3.6 X 1.3 | | 12.6 X 3.6 X 1.3 | | | |
| Water capacity ($m^3$) | 18 | 24 | | 31 | | 41 | | | |
| Empty weight / Full weight (kg) | 2300 / 20300 | 3300 / 27300 | 2550 / 26550 | 3700 / 34700 | 3050 / 34050 | 4500 / 45500 | 3850 / 44850 | | |
| **Characteristics** | | | | | | | | | |
| Skimmers | - | - | - | - | - | - | - | | |
| Overflow suction | 2 | 2 | 2 | 3 | 3 | 4 | 4 | | |
| Return inlet | 3 | 4 | 3 | 5 | 4 | 6 | 5 | | |
| Bottom cleaner nozzle | 1 | 1 | 1 | 1 | 1 | 2 | 2 | | |
| Main drains | 2 | 2 | 2 | 2 | 2 | 2 | 2 | | |
| Projectors | 2 | 2 | 2 | 2 | 2 | 3 | 3 | | |
| **Accessories** | | | | | | | | | |
| Ladder (3 steps) | • | - | • | - | • | - | • | | |
| Steps | - | • | - | • | - | • | - | | |
| Hydromassage bench | - | • | - | • | - | • | - | | |
| Hydromassage cascade | - | • | - | • | - | • | - | | |
| Hydromassage water jet | - | • | - | • | - | • | - | | |
| Hydromassage beds | - | • | - | • | - | • | - | | |
| Countercurrent | • | - | • | - | • | | • | | |
| Cover | - | • | | • | | • | - | | |
| **Recommended equipment** | | | | | | | | | |
| Hydraulic button and timer | - | **45218 + 35761** | - | **45218 + 35761** | - | **45218 + 35761** | - | | |
| Blower pump for hydro beds | - | **31091** | - | **31091** | - | **31091** | - | | |
| Blower pump for hydro bank | - | **35388** | - | **35388** | - | **35388** | - | | |

## INOXPOOL

Installation

New

### PREPARATION OF THE GROUND



The base the spa or pool must be prepared.

### TRANSFER TO LOCATION



Manufactured in one piece, your transfer must be made by an authorized mode of transport.



The transfer must be made in a reinforced trailer or truck so that it arrives at its destination in perfect condition.

### TRANSFER BY CRANE



Facilities must have easy access (outside) to be able to install the crane that will help to unload the Spa or Pool and put it in place.

### UNLOADING THE POOL



The installation must be checked and secured so that everything is in perfect order.

### LEVELING AND ADJUSTMENTS



Assembling the connections and putting it into operation is the last step before you can enjoy a relaxing and dreamed of space of well-being.

Ask for your new **Spa & Pool INOX SOLUTION** catalogue by AstralPool





## SKYPOOL COMMERCIAL POOLS

### ABOUT SKYPOOL

### PANEL POOLS, THE VERY LATEST TECHNOLOGY THAT ENSURES PRECISION AND ACCURACY



The easiest, quickest and surest way of building any required residential and commercial pool. SkyPool is AstralPool's range of prefabricated panel pools that can be adapted to fit existing infrastructures or new ones.

The use of these totally prefabricated panels that are easy to fasten and assemble together means that an in-ground or above-ground pool can be built in record time.

The steel panels undergo hot-dip galvanisation in a bath of zinc, which gives them excellent protection against rusting so that they last longer and their safety is guaranteed throughout their service life.

### SkyPool, experts in end-to-end solutions

Thanks to SkyPool, AstralPool is the undisputed world leader in prefabricated pools made of galvanized steel panels. Our flexibility and drive, in addition to the way we adapt to the needs and regulations of each market have led us to build pools in more than 60 countries, which has made us one of the companies with the greatest international outreach in the sector.

**Award-winning competition pools.**

As leaders in this sector, we have longstanding experience in the development of solutions for the world of competition. We make pools of any size including the required by FINA standards and regulations.

**End-to-end solutions.**

AstralPool has a multidisciplinary team able to give you support in the development of your project from beginning to end, as well as the degree of experience and know-how expected of a world leader:

· Project analysis.
· Preliminary design study and quote.
· Advice and water treatment.
· Manufacture.
· Worksite management.
· Installation of complete solutions.



## SKYPOOL COMMERCIAL POOLS

### SkyPool is the best choice for many reasons.

**Quick**

The use of completed prefabricated components together with the easy assembly system considerably reduces the time required to build a pool.

**Versatile**

This system can be used for any design, whatever a pool's shape.

**Long-lasting**

New design and manufacturing systems are used to obtain maximum quality, functionality and durability of all pool components. The metal structure has a 20-year warranty.

**Lightweight**

Choose a place and we'll build a pool there! The advantage of the lightweight structure that is easily adaptable is that pools can be built even in awkward conditions. Small spaces, rooftops, stadiums, etc.

**Inexpensive**

As no complex infrastructure has to be built, a high performance pool can be obtained at a lower cost.

**Reliable**

The use of the very best components, together with a totally safe construction system, delivers the reliability required in this type of facility.

**Sustainable**

All components can be recycled, are non-contaminating and are manufactured using processes with a low environmental impact.

### Advantages of SkyPool

**1. Technology**

Thanks to the technology used in the construction of SkyPool panels, they are fully compliant with FINA regulations. There is an extremely easy and efficient system for adjusting the level and angles of a pool. The access through the system's manholes enables all adjustment to be made.

**2. Watertight. No leaks.**

There are no cracks. The perfect fit of the assembled SkyPool panels covered by the liner ensure the pool shell is completely watertight. Furthermore, the system has been designed to withstand land movements and subsidence, in addition to the pressure exerted when a pool is emptied or filled.

**3. High resistance finishes.**

The PVC-P reinforced liner used by SkyPool is watertight, which gives these pools a high level of safety, protection, robustness and durability. Furthermore, it is resistant to chlorinated water and aging caused by external agents. The liner ensures elasticity and is available with a wide range of optional features (colours, etc.).

**4. Quicker installation time.**

It can take as much as two months off the time to manufacture and install an Olympic SkyPool (50 x 25 x 2 m) in comparison with a concrete pool. This considerably reduces indirect and opportunity costs.

**5. Low maintenance.**

As there is access to the pool perimeter, any problems are more quickly located, so repair and maintenance work is easier and costs less.

**6. Earthquakes resistant.**

Build earthquake-resistant pools. The team of Skypool engineers calculates and adapts the system according to the seismic regulations of each country. Under request.

## SKYPOOL COMMERCIAL POOLS

### SkyPool panel models



**BARCELONA PANEL**

Freestanding galvanized steel panel suitable for pools of up to 2.5 m. Fastenings are only required at the bottom.



**CAR PANEL**

Freestanding galvanized steel panel suitable for pools of up to 3 m. Fastenings are required at the top and on the bottom.



**RENOVATION PANEL**

Freestanding galvanized steel panel suitable for pools of up to 2.5 m. Fastenings are only required at the bottom.



**MELBOURNE PANEL**

Freestanding galvanized steel panel suitable for pools of up to 3 m with structure to install the surround of the pool.



# BLUESPRING

## Bluespring

When the sides of the overflow blend with the sky and with the surrounding atmosphere, the fulfillment of the perfect pool is realized, the time when the pool disappears and binds to the infinite lines.

Bluespring is designed to give space to the architectural interventions to harness the magic of the different types of overflow available. The structure has been designed to maintain the integrity of the performances over the years, getting its point of excellence in the reliability using. The best technology at the service of demanding customers who believe in the beauty of their own water space.

**A** Reinforced concrete slab
**B** Steel structure
**C** Compensation channel
**D** Perimetric flooring
**E** Reinforced membrane
**F** Concrete reinforcement
**G** Terrapieno
**H** Fasteners

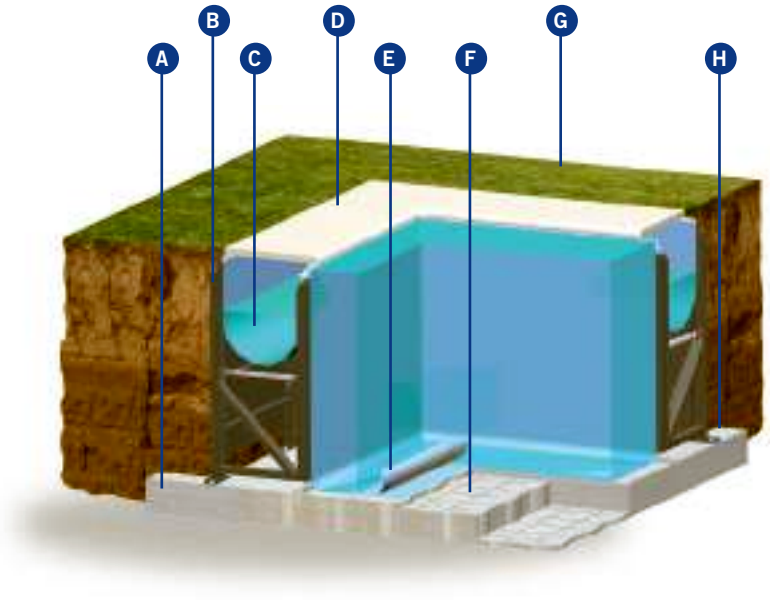


The Bluespring structure technology is made of galvanized and passivated steel with low-carbon Z275 coverage, treated with the exclusive protective Laghetto ZSV-TEC coating.

All the ground supports, the threaded rods anchors, the moving parts and the nuts and bolts are made of stainless steel.

The Bluespring ZSV-TEC structure provides a full height ground retaining panel if used as a classical inground pool, or is equipped with a shortened panel in case it is mounted in above ground situations.

Bluespring offers two standard heights for the pool panel: **130 and 152 centimeters**.

Higher or variable water depth can be obtained directly by varying the design of the bottom slab.

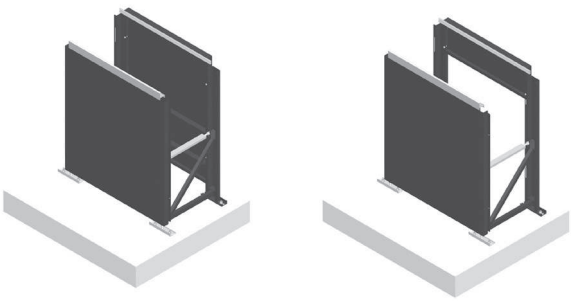

## BLUESPRING

### Bluespring compensation system

New

With Bluespring balance tank is not necessary, thanks to the use of big and capacious overflow duct, which allows to avoid the construction of the external compensation tank, with consequent and evident of space and cost savings.

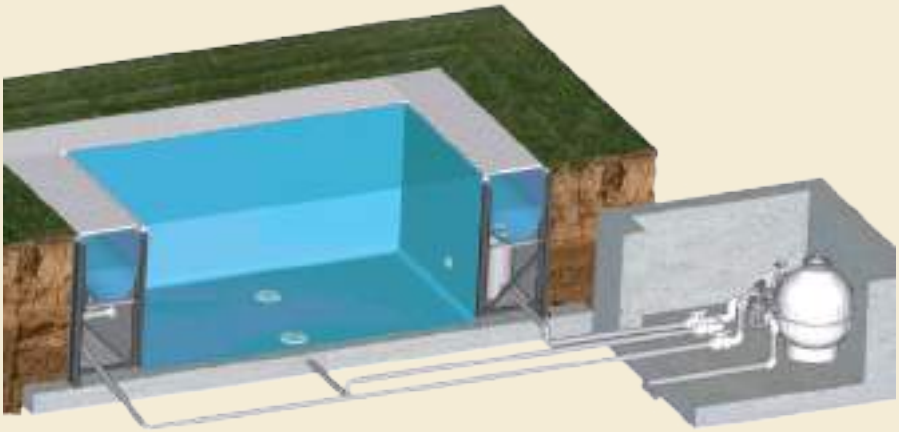





# SPA & POOL **INOX SOLUTION**

E X C L U S I V I T Y



## STAINLESS STEEL **CRAFTSMEN**

Our flexibility and dynamism, as well as our adaptation to the needs and regulations of each market, have led us to build steel solutions in more than 60 countries, making us one of the companies with the greatest international outreach in the sector.

## INTEGRAL SOLUTIONS, UNIQUE DESIGNS AND CUSTOM SOLUTIONS DEVELOPED CREATE EXCLUSIVE SPACES IN A WELLNESS ENVIRONMENT.

We put at your disposal all the tools and our broad experience to turn your project into reality, adapting our designs to the client's needs

ASTRALPOOL

Av. Francesc Macià, 60, Planta 17
08208 Sabadell (Barcelona) Spain
Tel.: +34 93 724 39 00
www.astralpool.com
www.fluidra.com

FLUIDRA

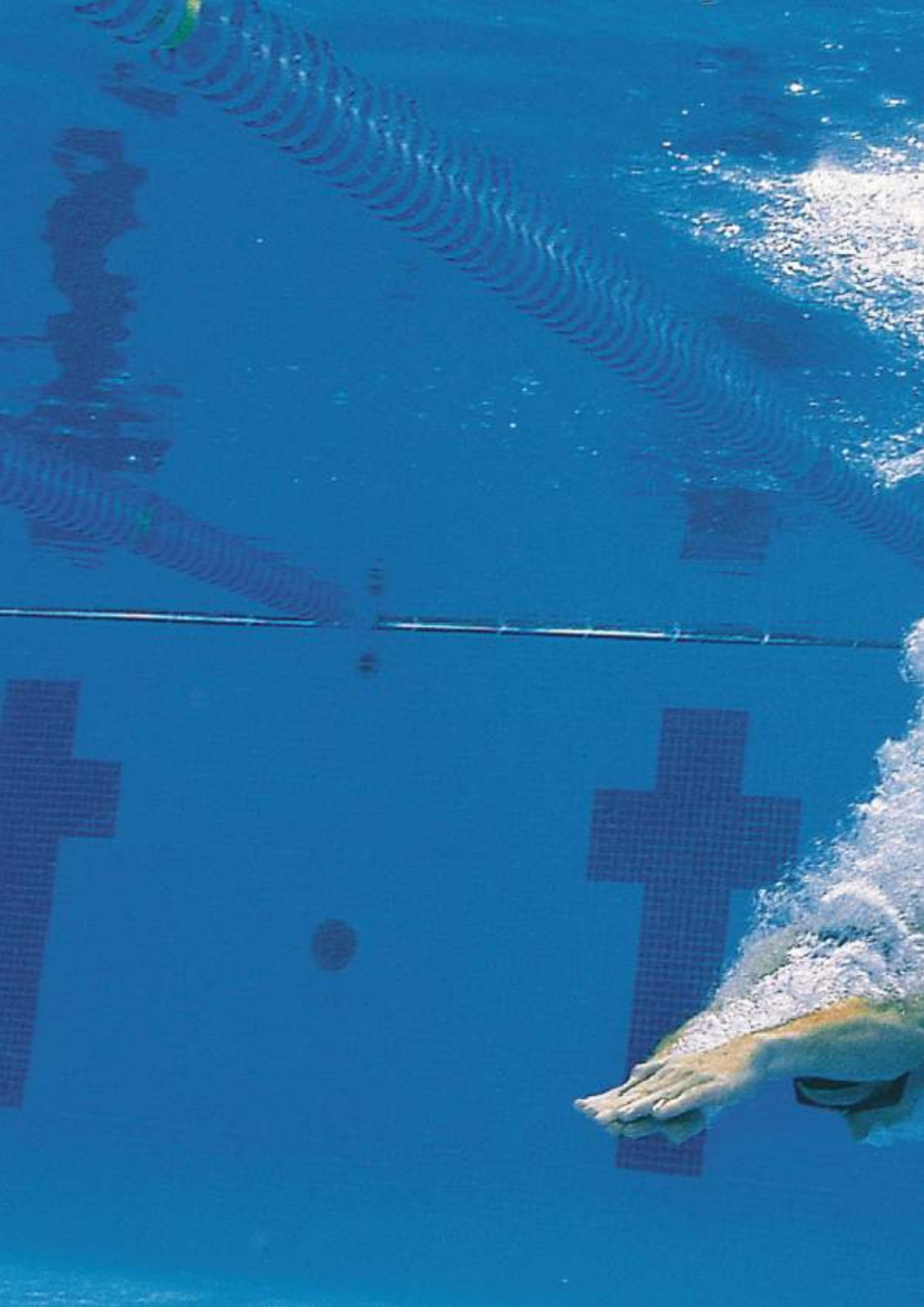



# COMMERCIAL POOLS
# FILTRATION


488 • Public pool filtration coding
489 • Laminated filters
494 • Bobbin wound filters
519 • Valve manifolds
521 • Control boxes
522 • Supports for valve manifolds
523 • Filtration media & accessories

# PUBLIC POOL FILTRATION CODING

## Coding

The filter code is composed of eight digits. The first five digits correspond to the filter code and the last three digits correspond to the model – this information is given in the tables below.

This codification system is used for the Praga, Oslo, Olot, Ampuria, Rodas, Vic, Europe, Vesubio and Delta filters.

| Position | 1 | 2 | 3 | 4 | 5 | – | 6 | 7 | 8 |
|---|---|---|---|---|---|---|---|---|---|

Position 1 to 5: Five digit code of the standard product.

| Position 6<br>Specifies the nozzle plate and vinyester options | |
|---|---|
| 0 | Filter without nozzle plate |
| 1 | Filter with nozzle plate |
| 2 | Vinylester finish |
| 3 | With plate and vinylester |
| | |
| | |
| | |

| Position 7<br>Specifies side opening options | |
|---|---|
| 0 | Without nozzle plates |
| 1 | 1 Ø 225 mm manhole |
| 2 | 1 Ø 400 mm manhole |
| 3 | 2 Ø 225 mm manholes |
| 4 | 2 Ø 400 mm manholes |
| 5 | 1 Ø 500 mm manhole |
| 6 | 1 Ø 600 mm manhole |

| Position 8<br>Specifies sightglass options | |
|---|---|
| 0 | Without sightglasses |
| 1 | 1 sightglass for laminated filter |
| 2 | 1 Ø 135 mm sightglass |
| 3 | 2 Ø 135 mm sightglasses |
| 4 | 2 Ø 225 mm manholes |
| | |
| | |

**Notes**: Rodas filters with nozzle plates are not available.
Ø 500 mm side opening for filters as of Ø 1050 mm.
Ø 600 mm side opening for filters as of Ø 1800 mm.
Maximum vinylester option of 0.5 ppm.

Please enquire pricing for various options:

- Vinylester finish
- Ø 225 mm and Ø 400 mm manhole
- Sightglass
- Plate

## Head loss curve

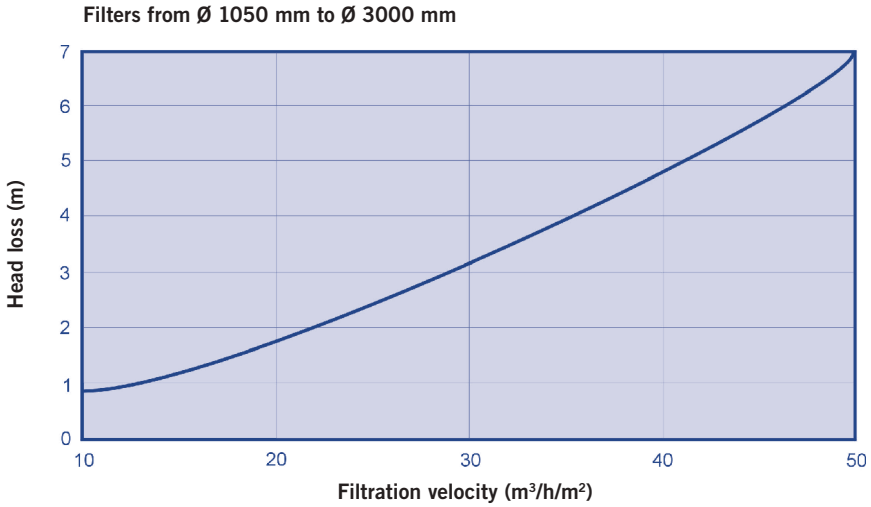

Filtration bed 1 m

# LAMINATED FILTERS



Optional: Standard American sizes

## Vesubio filters - Commercial pool series

Made of polyester resin and fibreglass. Equipped with pressure gauge, and manual air and water purge valves. Ø 400 mm cover Suitable for filtration speeds of 20, 30, 40 and 50 $m^3/h/m^2$. Please ask your dealer for other speeds. All filters can be assembled with valve manifolds. 2½" sand discharge outlet.

**Maximum pressure: 2.5 kg/cm².**

**Filtration bed 1 m**

| Diameter Ø mm | Filtration velocity $m^3/h/m^2$ | Outlet Ø mm | Flow rate $m^3/h$ | Code | Standard Packaging | Standard Weight Kg | Standard Volume $m^3$ |
|---|---|---|---|---|---|---|---|
| 1050 | 20 | 63 | 17 | **41304** | 1 | 110 | 2.25 |
| | 30/40 | 75 | 25/34 | **41305** | 1 | 110 | 2.25 |
| | 50 | 90 | 43 | **41306** | 1 | 110 | 2.25 |
| 1200 | 20/30 | 75 | 22/33 | **41307** | 1 | 125 | 3.37 |
| | 40/50 | 90 | 45/56 | **41308** | 1 | 125 | 3.37 |
| 1400 | 20 | 75 | 30 | **41309** | 1 | 152 | 4.41 |
| | 30 | 90 | 46 | **41310** | 1 | 152 | 4.41 |
| | 40/50 | 110 | 61/77 | **41311** | 1 | 152 | 4.41 |
| 1600 | 20 | 90 | 40 | **41312** | 1 | 185 | 5.66 |
| | 30/40 | 110 | 60/80 | **41313** | 1 | 185 | 5.66 |
| | 50 | 125 | 100 | **41314** | 1 | 185 | 5.66 |
| 1800 | 20 | 90 | 50 | **41315** | 1 | 257 | 7.40 |
| | 30 | 110 | 76 | **41316** | 1 | 257 | 7.40 |
| | 40 | 125 | 101 | **41317** | 1 | 257 | 7.40 |
| | 50 | 140 | 125 | **41318** | 1 | 257 | 7.40 |
| 2000 | 20 | 110 | 62 | **41319** | 1 | 360 | 9.48 |
| | 30 | 125 | 94 | **41320** | 1 | 360 | 9.48 |
| | 40 | 140 | 125 | **41321** | 1 | 360 | 9.48 |
| | 50 | 160 | 157 | **41322** | 1 | 360 | 9.48 |

| Ø D (mm) | Filtration velocity ($m^3/h/m^2$) | Code | Connections | | Flow rate | Pool volume (8h) | Filtration surface | C | A | B | Ø D | Sand load | Gravel load | Grade 1 glass load (57011) | Grade 2 glass load (57012) | Grade 3 glass load (57013) |
|---|---|---|---|---|---|---|---|---|---|---|---|---|---|---|---|---|
| | | | mm | inches | ($m^3/h$) | ($m^3$) | ($m^2$) | (mm) | (mm) | (mm) | (mm) | (kg) | (kg) | (kg) | (kg) | (kg) |
| 1050 | 20 | **41304** | 63 | 2" | 17 | 136 | 0,86 | 1545 | 465 | 500 | 760 | 1125 | 175 | 678 | 221 | 244 |
| | 30/40 | **41305** | 75 | 2½" | 25/34 | 200/272 | | | | | | | | | | |
| | 50 | **41306** | 90 | 3" | 43 | 344 | | | | | | | | | | |
| 1200 | 20/30 | **41307** | 75 | 2½" | 22/33 | 176/264 | 1,13 | 1730 | 675 | 500 | 850 | 1350 | 275 | 846 | 276 | 304 |
| | 40/50 | **41308** | 90 | 3" | 45/56 | 360/448 | | | | | | | | | | |
| 1400 | 20 | **41309** | 75 | 2½" | 30 | 240 | 1,54 | 1845 | 725 | 500 | 1085 | 1850 | 350 | 1146 | 374 | 412 |
| | 30 | **41310** | 90 | 3" | 46 | 368 | | | | | | | | | | |
| | 40/50 | **41311** | 110 | 4" | 61/77 | 488/616 | | | | | | | | | | |
| 1600 | 20 | **41312** | 90 | 3" | 40 | 320 | 2,01 | 1850 | 710 | 500 | 1230 | 2723 | 450 | 1654 | 540 | 595 |
| | 30/40 | **41313** | 110 | 4" | 60/80 | 480/640 | | | | | | | | | | |
| | 50 | **41314** | 125 | 4½" | 100 | 800 | | | | | | | | | | |
| 1800 | 20 | **41315** | 90 | 3" | 50 | 400 | 2,54 | 1915 | 755 | 570 | 1370 | 3175 | 550 | 1941 | 634 | 698 |
| | 30 | **41316** | 110 | 4" | 76 | 608 | | | | | | | | | | |
| | 40 | **41317** | 125 | 4½" | 101 | 808 | | | | | | | | | | |
| | 50 | **41318** | 140 | 5" | 125 | 1000 | | | | | | | | | | |
| 2000 | 20 | **41319** | 110 | 4" | 62 | 496 | 3,14 | 2030 | 775 | 570 | 1560 | 3650 | 675 | 2253 | 736 | 810 |
| | 30 | **41320** | 125 | 4½" | 94 | 752 | | | | | | | | | | |
| | 40 | **41321** | 140 | 5" | 125 | 1000 | | | | | | | | | | |
| | 50 | **41322** | 160 | 6" | 157 | 1256 | | | | | | | | | | |

NB: Coding options according to table on page 488

**Filtration bed 1 m**

# LAMINATED FILTERS



DOES NOT INCLUDE VALVE MANIFOLD

* May be coupled with 2" multiport valve

** May be coupled with 2½" multiport valve.

Optional: Standard American sizes

## Europe filters

Made of polyester resin and fibreglass. Equipped with pressure gauge, and manual air and water purge valves. Ø 400 mm cover Suitable for filtration speeds of 20, 30, 40 and 50 $m^3/h/m^2$. Please ask your dealer for other speeds. All filters can be assembled with valve manifolds. 2½" sand discharge outlet.

**Maximum pressure: 2.5 kg/cm².** **Filtration bed 1 m**

| Diameter Ø mm | Filtration velocity $m^3/h/m^2$ | Outlet Ø mm | Flow rate $m^3/h$ | Code | Standard Packaging | Standard Weight Kg | Standard Volume $m^3$ |
|---|---|---|---|---|---|---|---|
| 1050 | 20* | 63 | 17 | **20070** | 1 | 125 | 2.823 |
| | 30/40** | 75 | 25/34 | **20071** | 1 | 125 | 2.823 |
| | 50 | 90 | 43 | **20072** | 1 | 125 | 2.823 |
| 1200 | 20/30 | 75 | 22/33 | **20068** | 1 | 150 | 3.597 |
| | 40/50 | 90 | 45/56 | **20069** | 1 | 150 | 3.597 |
| 1400 | 20 | 75 | 30 | **21497** | 1 | 214 | 4.90 |
| | 30 | 90 | 46 | **21498** | 1 | 214 | 4.90 |
| | 40/50 | 110 | 61/77 | **21499** | 1 | 214 | 4.90 |
| 1600 | 20 | 90 | 40 | **21500** | 1 | 230 | 6.50 |
| | 30/40 | 110 | 60/80 | **21501** | 1 | 230 | 6.50 |
| | 50 | 125 | 100 | **21502** | 1 | 230 | 6.50 |
| 1800 | 20 | 90 | 50 | **21503** | 1 | 344 | 8.80 |
| | 30 | 110 | 76 | **21504** | 1 | 344 | 8.80 |
| | 40 | 125 | 101 | **21505** | 1 | 344 | 8.80 |
| | 50 | 140 | 125 | **21506** | 1 | 344 | 8.80 |
| 2000 | 20 | 110 | 62 | **21507** | 1 | 435 | 10.58 |
| | 30 | 125 | 94 | **21508** | 1 | 435 | 10.58 |
| | 40 | 140 | 125 | **21509** | 1 | 435 | 10.58 |
| | 50 | 160 | 157 | **21510** | 1 | 435 | 10.58 |
| 2350 | 20 | 125 | 87 | **33820** | 1 | 600 | 15.70 |
| | 30 | 140 | 130 | **33822** | 1 | 600 | 15.70 |
| | 40 | 160 | 174 | **33824** | 1 | 600 | 15.70 |
| | 50 | 200 | 217 | **33826** | 1 | 600 | 15.70 |
| 2500 | 20 | 140 | 100 | **34302** | 1 | 630 | - |
| | 30 | 160 | 150 | **34303** | 1 | 630 | - |
| | 40 | 200 | 200 | **34304** | 1 | 630 | - |
| | 50 | 225 | 225 | **34305** | 1 | 630 | - |

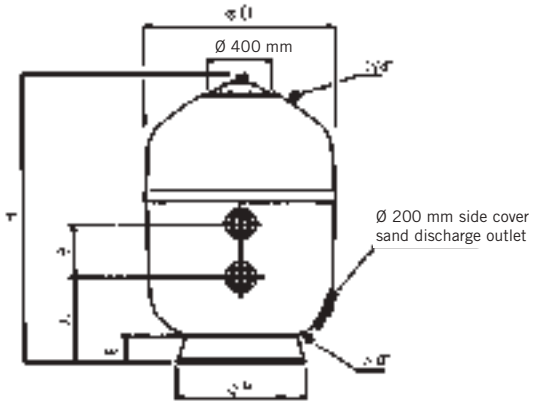


| Ø (mm) | 1050 | 1200 | 1400 | 1600 | 1800 | 2000 | 2350 | 2500 |
|---|---|---|---|---|---|---|---|---|
| Depth of sand medium (m) | 1 | 1 | 1 | 1 | 1 | 1 | 1 | 1 |
| H (mm) | 1860 | 1860 | 2000 | 2100 | 2200 | 2200 | 2430 | 2525 |
| B (mm) | 270* | 350 | 400 | 400 | 400 | 400 | 400 | 500 |
| A (mm) | 540 | 570 | 615 | 710 | 725 | 805 | 950 | 1015 |
| Ø P (mm) | 760 | 850 | 1083 | 1230 | 1370 | 1558 | 1830 | 1830 |
| E (mm) | 170 | 180 | 240 | 250 | 270 | 300 | 355 | - |
| Filtration surface areas ($m^2$) | 0,86 | 1,13 | 1,54 | 2,01 | 2,54 | 3,14 | 4,34 | 4,9 |
| Volume (l) | 1250 | 1575 | 2185 | 2965 | 3850 | 4850 | 7230 | 9385 |
| Sand load (kg) | 1050 | 1360 | 1820 | 2375 | 3010 | 3750 | 5000 | 5600 |
| Gravel load (kg) | 265 | 325 | 410 | 515 | 760 | 1060 | 2000 | 2920 |
| Grade 1 glass load (57011) (kg) | 683 | 876 | 1160 | 1504 | 1959 | 2497 | 3622 | 4395 |
| Grade 2 glass load (57012) (kg) | 223 | 286 | 379 | 491 | 640 | 816 | 1183 | 1436 |
| Grade 3 glass load (57013) (kg) | 246 | 315 | 417 | 541 | 705 | 898 | 1302 | 1580 |
| Total operating weight (kg) | 2060 | 2600 | 3500 | 4700 | 6150 | 7800 | 10786 | 13800 |

* For 2" multiport valve the height will be 230 mm.

**NB: Coding options according to table on page 488**

**Filtration bed 1.2 m**



DOES NOT INCLUDE VALVE MANIFOLD

Optional: Standard American sizes

# LAMINATED FILTERS

## Europe filters

**Maximum pressure: 2.5 kg/cm².**

**Filtration bed 1.2 m**

| Diameter Ø mm | Filtration velocity m³/h/m² | Outlet Ø mm | Flow rate m³/h | Code | Standard Packaging | Standard Weight Kg | Standard Volume m³ |
|---|---|---|---|---|---|---|---|
| 1050 | 20* | 63 | 17 | **31857** | 1 | 140 | 3.04 |
| | 30/40** | 75 | 25/34 | **31858** | 1 | 140 | 3.04 |
| | 50 | 90 | 43 | **31859** | 1 | 140 | 3.04 |
| 1200 | 20/30 | 75 | 22/33 | **31860** | 1 | 155 | 3.89 |
| | 40/50 | 90 | 45/56 | **31861** | 1 | 155 | 3.89 |
| 1400 | 20 | 75 | 30 | **21511** | 1 | 215 | 6.27 |
| | 30 | 90 | 46 | **21512** | 1 | 215 | 6.27 |
| | 40/50 | 110 | 61/77 | **21513** | 1 | 215 | 6.27 |
| 1600 | 20 | 90 | 40 | **21514** | 1 | 255 | 8.31 |
| | 30/40 | 110 | 60/80 | **21515** | 1 | 255 | 8.31 |
| | 50 | 125 | 100 | **21516** | 1 | 255 | 8.31 |
| 1800 | 20 | 90 | 50 | **21517** | 1 | 385 | 10.65 |
| | 30 | 110 | 76 | **21518** | 1 | 385 | 10.65 |
| | 40 | 125 | 101 | **21519** | 1 | 385 | 10.65 |
| | 50 | 140 | 125 | **21520** | 1 | 385 | 10.65 |
| 2000 | 20 | 110 | 62 | **21521** | 1 | 425 | 12.90 |
| | 30 | 125 | 94 | **21522** | 1 | 425 | 12.90 |
| | 40 | 140 | 125 | **21523** | 1 | 425 | 12.90 |
| | 50 | 160 | 157 | **21524** | 1 | 425 | 12.90 |
| 2350 | 20 | 125 | 87 | **33821** | 1 | 630 | 16.80 |
| | 30 | 140 | 130 | **33823** | 1 | 630 | 16.80 |
| | 40 | 160 | 174 | **33825** | 1 | 630 | 16.80 |
| | 50 | 200 | 217 | **33827** | 1 | 630 | 16.80 |
| 2500 | 20 | 140 | 100 | **34306** | 1 | 860 | - |
| | 30 | 160 | 150 | **34307** | 1 | 860 | - |
| | 40 | 200 | 200 | **34308** | 1 | 860 | - |
| | 50 | 225 | 225 | **34309** | 1 | 860 | - |

| Ø (mm) | 1050 | 1200 | 1400 | 1600 | 1800 | 2000 | 2350 | 2500 |
|---|---|---|---|---|---|---|---|---|
| Depth of sand medium (m) | 1,2 | 1,2 | 1,2 | 1,2 | 1,2 | 1,2 | 1,2 | 1,2 |
| H (mm) | 2060 | 2060 | 2200 | 2300 | 2400 | 2400 | 2630 | 2675 |
| B (mm) | 270 | 350 | 400 | 400 | 400 | 400 | 400 | 500 |
| A (mm) | 540 | 570 | 615 | 710 | 725 | 805 | 950 | 1015 |
| Ø P (mm) | 760 | 850 | 1085 | 1230 | 1370 | 1560 | 1830 | 1830 |
| E (mm) | 170 | 180 | 240 | 250 | 270 | 300 | 355 | - |
| Filtration surface areas (m²) | 0,86 | 1,13 | 1,54 | 2,01 | 2,54 | 3,14 | 4,34 | 4,90 |
| Volume (l) | 1500 | 1900 | 2650 | 3560 | 4620 | 5820 | 8060 | - |
| Sand load (kg) | 1300 | 1660 | 2220 | 2950 | 3680 | 4600 | 6130 | 6680 |
| Gravel load (kg) | 265 | 325 | 410 | 515 | 760 | 1060 | 2000 | 2920 |
| Grade 1 glass load (57011) (kg) | 815 | 1034 | 1370 | 1806 | 2311 | 2944 | 4215 | 4962 |
| Grade 2 glass load (57012) (kg) | 266 | 338 | 448 | 590 | 755 | 962 | 1377 | 1621 |
| Grade 2 glass load (57012) (kg) | 293 | 372 | 493 | 649 | 831 | 1059 | 1516 | 1784 |
| Total operating weight (kg) | 2375 | 2950 | 4000 | 5475 | 6950 | 8800 | 12180 | 14460 |

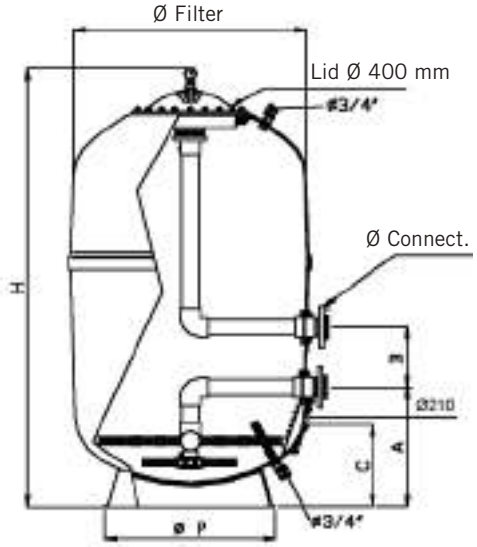

Filtration bed 1.2 m

# LAMINATED FILTERS



SINGLE LAYER



MULTILAYER

## DIN filters

Laminated filter made of polyester resin and fibreglass. Designed as per standard DIN 19643/19605. Ral 5015 colour code.

It is characterised by:

- Bolts in 316 AISI.
- Outlet clear water above nozzle plate in Europe.
- Nozzle plate system 65 units / m².
- 5 years warranty in tank.
- Maximum pressure: 2.5 bar.
- Maximum temperature 50º C.
- Sight glass 50 x 300 mm (one or two sight glasses, depending on model).
- Filter bed height 1,2 m.
- Freeboard 0,5 m.
- Connections in polyester.
- Lateral manhole d.400 in all models except Norma DIN 650 with d.200 mm.
- Top manhole d.400 mm in all models except Norma DIN 650 and 800 with d.200 mm.

**OPTIONAL FEATURES**

- Maximum pressure 4 bar.
- Ozone resistance 10mg/l (DIN 18820).

| | Code | Standard Pack | Standard Weight in kg | Standard Volume in m³ |
|---|---|---|---|---|
| **Monolayer - 1 sight glass** | | | | |
| **DIN Standard** | | | | |
| Ø 650 mm | **66033 126 000** | 1 | - | 1.88 |
| Ø 800 mm | **66034 126 000** | 1 | - | 2.70 |
| Ø 1000 mm | **66035 126 000** | 1 | - | 4.30 |
| Ø 1200 mm | **66036 126 000** | 1 | - | 4.98 |
| **Europe DIN** | | | | |
| **Outlet water above nozzle plate** | | | | |
| Ø 1400 mm | **66037 126 000** | 1 | - | 7.85 |
| Ø 1600 mm | **66038 126 000** | 1 | - | 9.40 |
| Ø 1800 mm | **66039 126 000** | 1 | - | 12.40 |
| Ø 2000 mm | **66040 126 000** | 1 | - | 15.49 |
| **Outlet water under nozzle plate** | | | | |
| Ø 1400 mm | **66685 126 000** | 1 | - | 7.85 |
| Ø 1600 mm | **66686 126 000** | 1 | - | 9.40 |
| Ø 1800 mm | **66687 126 000** | 1 | - | 12.40 |
| Ø 2000 mm | **66688 126 000** | 1 | - | 15.49 |
| **Multilayer - 2 sight glasses** | | | | |
| **DIN Standard** | | | | |
| Ø 650 mm | **66033 127 000** | 1 | - | 1.88 |
| Ø 800 mm | **66034 127 000** | 1 | - | 2.70 |
| Ø 1000 mm | **66035 127 000** | 1 | - | 4.30 |
| Ø 1200 mm | **66036 127 000** | 1 | - | 4.98 |
| **Europe DIN** | | | | |
| **Outlet water above nozzle plate** | | | | |
| Ø 1400 mm | **66037 127 000** | 1 | - | 7.85 |
| Ø 1600 mm | **66038 127 000** | 1 | - | 9.40 |
| Ø 1800 mm | **66039 127 000** | 1 | - | 12.40 |
| Ø 2000 mm | **66040 127 000** | 1 | - | 15.49 |
| **Outlet water under nozzle plate** | | | | |
| Ø 1400 mm | **66685 127 000** | 1 | - | 7.85 |
| Ø 1600 mm | **66686 127 000** | 1 | - | 9.40 |
| Ø 1800 mm | **66687 127 000** | 1 | - | 12.40 |
| Ø 2000 mm | **66688 127 000** | 1 | - | 15.49 |

## LAMINATED FILTERS

### DIN filters

Europe DIN

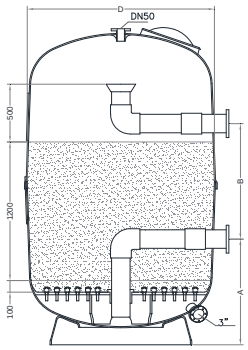


DIN Standard

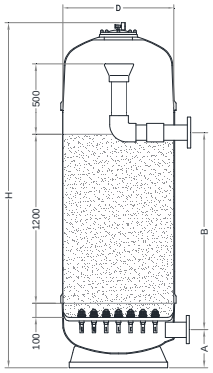


Monolayer - Outlet water above nozzle plate for European DIN.

Europe DIN

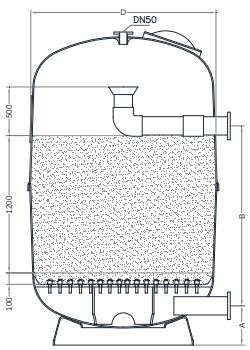


DIN Standard

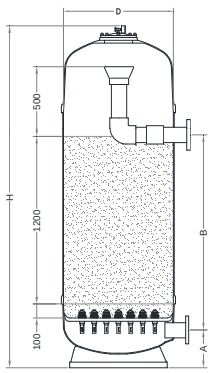


Monolayer - Outlet water under nozzle plate.

Europe DIN

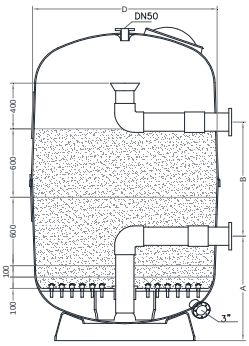


DIN Standard

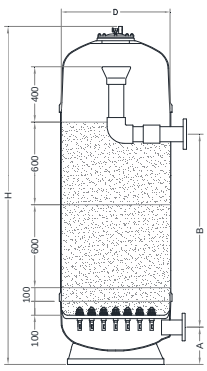


Multilayer - Outlet water above nozzle plate for European DIN.

Europe DIN

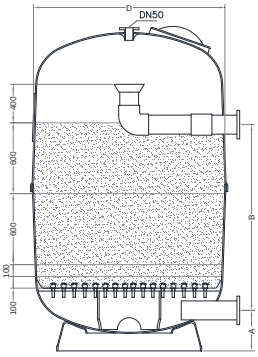


DIN Standard

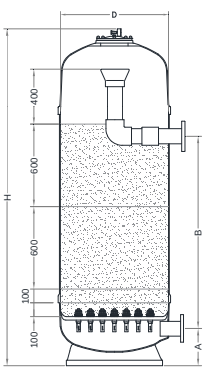


Multilayer - Outlet water under nozzle plate.

### TECHNICAL FEATURES

| | | DIN Standard | | | | Europe DIN | | | |
|---|---|---|---|---|---|---|---|---|---|
| Monolayer (1 sight glass) | Outlet water above nozzle plate | 66033 126 000 | 66034 126 000 | 66035 126 000 | 66036 126 000 | 66037 126 000 | 66038 126 000 | 66039 126 000 | 66040 126 000 |
| | Outlet water under nozzle plate | 66033 126 000 | 66034 126 000 | 66035 126 000 | 66036 126 000 | 66685 126 000 | 66686 126 000 | 66687 126 000 | 66688 126 000 |
| Multilayer (2 sight glasses) | Outlet water above nozzle plate | 66033 127 000 | 66034 127 000 | 66035 127 000 | 66036 127 000 | 66037 127 000 | 66038 127 000 | 66039 127 000 | 66040 127 000 |
| | Outlet water under nozzle plate | 66033 127 000 | 66034 127 000 | 66035 127 000 | 66036 127 000 | 66685 127 000 | 66686 127 000 | 66687 127 000 | 66688 127 000 |
| Ø (mm) | | 650 | 800 | 1000 | 1200 | 1400 | 1600 | 1800 | 2000 |
| Filtration velocity ($m^3/h/m^2$) | | 20 / 30 | 20 / 30 | 20 / 30 | 20 / 30 | 20 / 30 | 20 / 30 | 20 / 30 | 20 / 30 |
| Flow ($m^3/h$) | | 7 / 10 | 10 / 15 | 16 / 23 | 23 / 34 | 31 / 46 | 40 / 60 | 51/76 | 63/94 |
| H (mm) | | 2411 | 2442 | 2617 | 2752 | 2650 | 2738 | 2800 | 2880 |
| A (mm) | Outlet water above nozzle plate | - | - | - | - | 915 | 915 | 915 | 960 |
| | Outlet water under nozzle plate | 270 | 270 | 355 | 385 | 400 | 400 | 400 | 400 |
| B (mm) | Outlet water above nozzle plate | - | - | - | - | 1000 | 1000 | 1000 | 1000 |
| | Outlet water under nozzle plate | 1400 | 1400 | 1400 | 1400 | 1400 | 1400 | 1400 | 1400 |
| D (mm) | | 668 | 818 | 1033 | 1234 | 1440 | 1640 | 1840 | 2040 |
| Input connection (mm) | | 90 | 110 | 140 | 160 | 160 | 160 | 200 | 200 |
| Output connection (mm) | | 75 | 90 | 110 | 140 | 140 | 160 | 160 | 200 |
| MULTILAYER | 1ª layer) Gravel 3 – 5 mm (kg) | 50 | 80 | 120 | 175 | 240 | 310 | 395 | 485 |
| | 2ª layer) Gravel 2 – 3 mm (kg) | 50 | 80 | 120 | 175 | 240 | 310 | 395 | 485 |
| | 3ª layer) Sand 0.4 – 0.8 mm (kg) | 270 | 407 | 635 | 915 | 1245 | 1630 | 2060 | 2545 |
| | 4ª layer) Anthracite 0.6 – 1.6 mm (l) | 160 | 240 | 375 | 540 | 740 | 965 | 1220 | 1508 |
| SINGLE LAYER | Sand 0,7 -1.2 mm (kg) | 535 | 815 | 1270 | 1830 | 2495 | 3255 | 4120 | 5090 |
| | Gravel 2 – 3 mm (kg) | 50 | 80 | 120 | 175 | 240 | 310 | 395 | 485 |
| | Grade 1 glass load (57011) (kg) | 305 | 470 | 730 | 1050 | 1430 | 1865 | 2360 | 2915 |
| | Grade 2 glass load (57012) (kg) | 100 | 155 | 240 | 340 | 470 | 610 | 770 | 950 |
| | Grade 2 glass load (57012) (kg) | 110 | 170 | 260 | 380 | 515 | 670 | 850 | 1050 |

**Filtration bed 1 m**

# BOBBIN WOUND FILTERS



## Vic filters

Industrial bobbin wound filters with diameters from 1050 mm to 3000 mm, with the corresponding flange connections for different filtration velocities. Replaces the Atenas model. New top cover system with quick closing system 400 x 500 mm opening. The air relief valve is fitted into the cover in order to help eliminate air from the filter. 1½" collector arms injected in ABS at the necessary lengths for each of the filters and without joints. Lengths from 90 mm to 525 mm. A reduced head loss is achieved thanks to the greater diameter of the arms.

The 90 mm diameter collector tubing is injected in PVC. Water purge and air relief are faster due to a 1" connection. The distance between the top sand layer and the diffusor head ("freeboard") has been increased to ensure greater water distribution during filtration and to prevent sand entering into the laterals during the backwashing.

In the case of filters with diameters of 2350 mm, 2500 mm and 3000 mm, the top cover is Ø 400 mm that screws into place and has a PRFV high resistance neck ring. The 200 mm, 225 mm and 250 mm connections are in PVC and the foot is plain, both of which are features very similar to the Oslo and Prague models.

DOES NOT INCLUDE VALVE MANIFOLD

For filters with nozzle plates, a side opening (Ø 400 mm or Ø 225 mm) should be made for emptying the filter medium.

Optional: Standard American sizes

**Maximum pressure: 2.5 kg/cm².**

| Diameter Ø mm | Filtration velocity m³/h/m² | Outlet Ø mm | Flow rate m³/h | Code | Standard Packaging | Standard Weight Kg | Standard Volume m³ |
|---|---|---|---|---|---|---|---|
| **1050** | 20 | 63 | 17 | **11511N** | 1 | 120 | 1.9 |
| | 30-40 | 75 | 25-34 | **11517N** | 1 | 120 | 1.9 |
| | 50 | 90 | 43 | **11526N** | 1 | 120 | 1.9 |
| **1200** | 20-30 | 75 | 22-33 | **11512N** | 1 | 154 | 2.7 |
| | 40-50 | 90 | 45-56 | **11522N** | 1 | 154 | 2.7 |
| **1400** | 20 | 75 | 30 | **11513N** | 1 | 173 | 3.7 |
| | 30 | 90 | 46 | **11518N** | 1 | 173 | 3.7 |
| | 40-50 | 110 | 61-77 | **11523N** | 1 | 173 | 3.7 |
| **1600** | 20 | 90 | 40 | **11514N** | 1 | 235 | 5.0 |
| | 30-40 | 110 | 60-80 | **11519N** | 1 | 235 | 5.0 |
| | 50 | 125 | 100 | **11527N** | 1 | 235 | 5.0 |
| **1800** | 20 | 90 | 50 | **11515N** | 1 | 270 | 6.4 |
| | 30 | 110 | 76 | **11520N** | 1 | 270 | 6.4 |
| | 40 | 125 | 101 | **11524N** | 1 | 270 | 6.4 |
| | 50 | 140 | 125 | **11528N** | 1 | 270 | 6.4 |
| **2000** | 20 | 110 | 62 | **11516N** | 1 | 295 | 8.7 |
| | 30 | 125 | 94 | **11521N** | 1 | 295 | 8.7 |
| | 40 | 140 | 125 | **11525N** | 1 | 295 | 8.7 |
| | 50 | 160 | 157 | **11529N** | 1 | 295 | 8.7 |



**Filter base**



**Collector arms**

**NB: Technical features in accordance with the table on the following page**

**Filtration bed 1 m**



DOES NOT INCLUDE VALVE MANIFOLD

For filters with nozzle plates, a side opening (Ø 400 mm or Ø 225 mm) should be made for emptying the filter medium.

Optional: Standard American sizes



**Filter base**



**Collector arms**

# BOBBIN WOUND FILTERS

## Vic filters

| Code 2.5 kg | Ø filter mm | A mm | B mm | C mm | H mm | Ø P mm | Ø flange mm | Filtration surface area ($m^2$) |
|---|---|---|---|---|---|---|---|---|
| **11511N** | 1050 | 685 | 85 | 535 | 1950 | 760 | 63 | 0.86 |
| **11517N** | 1050 | 685 | 85 | 535 | 1950 | 760 | 75 | 0.86 |
| **11526N** | 1050 | 685 | 85 | 535 | 1950 | 760 | 90 | 0.86 |
| **11512N** | 1200 | 680 | 85 | 530 | 1970 | 860 | 75 | 1.13 |
| **11522N** | 1200 | 680 | 85 | 530 | 1970 | 860 | 90 | 1.13 |
| **11513N** | 1400 | 685 | 85 | 575 | 2000 | 1020 | 75 | 1.54 |
| **11518N** | 1400 | 685 | 85 | 575 | 2000 | 1020 | 90 | 1.54 |
| **11523N** | 1400 | 685 | 85 | 575 | 2000 | 1020 | 110 | 1.54 |
| **11514N** | 1600 | 695 | 85 | 625 | 2050 | 1150 | 90 | 2.01 |
| **11519N** | 1600 | 695 | 85 | 625 | 2050 | 1150 | 110 | 2.01 |
| **11527N** | 1600 | 695 | 85 | 625 | 2050 | 1150 | 125 | 2.01 |
| **11515N** | 1800 | 710 | 85 | 670 | 2080 | 1320 | 90 | 2.54 |
| **11520N** | 1800 | 710 | 85 | 670 | 2080 | 1320 | 110 | 2.54 |
| **11524N** | 1800 | 710 | 85 | 670 | 2080 | 1320 | 125 | 2.54 |
| **11528N** | 1800 | 710 | 85 | 670 | 2080 | 1320 | 140 | 2.54 |
| **11516N** | 2000 | 730 | 85 | 715 | 2150 | 1470 | 110 | 3.14 |
| **11521N** | 2000 | 730 | 85 | 715 | 2150 | 1470 | 125 | 3.14 |
| **11525N** | 2000 | 730 | 85 | 715 | 2150 | 1470 | 140 | 3.14 |
| **11529N** | 2000 | 730 | 85 | 715 | 2150 | 1470 | 160 | 3.14 |

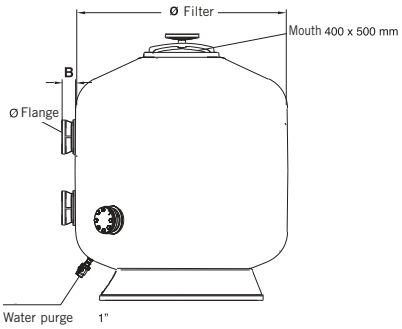


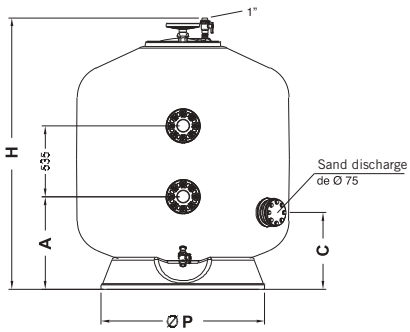


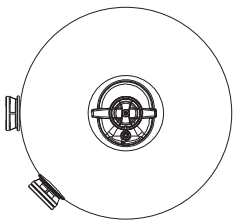

| Type | Ø | 1050 | 1200 | 1400 | 1600 | 1800 | 2000 |
|---|---|---|---|---|---|---|---|
| Single-layer collector arms | Sand load (kg) | 950 | 1375 | 1650 | 2150 | 2800 | 3800 |
| | Gravel load (kg) | 300 | 300 | 450 | 675 | 750 | 1050 |
| | Grade 1 glass load (57011) (kg) | 648 | 872 | 1091 | 1465 | 1844 | 2519 |
| | Grade 2 glass load (57012) (kg) | 212 | 285 | 356 | 479 | 602 | 823 |
| | Grade 2 glass load (57012) (kg) | 233 | 313 | 392 | 527 | 663 | 906 |
| Single layer nozzle plate | Sand load (kg) | 700 | 1200 | 1400 | 1850 | 2400 | 3300 |
| | Gravel load (kg) | 150 | 175 | 250 | 300 | 400 | 500 |
| | Grade 1 glass load (57011) (kg) | 442 | 717 | 860 | 1121 | 1460 | 1982 |
| | Grade 2 glass load (57012) (kg) | 144 | 234 | 281 | 366 | 477 | 647 |
| | Grade 2 glass load (57012) (kg) | 159 | 258 | 309 | 403 | 525 | 173 |

**Filtration bed 1 m**



DOES NOT INCLUDE VALVE MANIFOLD

OTHER SPECIFIC DEPTHS MAY BE MADE TO ORDER.

THE Ø 3000 mm FILTERS WILL BE SHIPPED BY SPECIAL DELIVERY. ASK YOUR DEALER ABOUT ADDITIONAL COSTS.

For filters with nozzle plates, a side opening (Ø 400 mm or Ø 225 mm) should be made for emptying the filter medium.

Optional: Standard American sizes

# BOBBIN WOUND FILTERS

## Praga filters

Polyester and fibreglass single-layer filter Ø400mm lid. Equipped with pressure gauge panel, manual air and water bleed valves and drain plug. Suitable for filtration speeds of 20, 30, 40 and 50 $m^3/h/m^2$.
For other filtration velocities, please enquire.

**Maximum pressure: 2.5 $kg/cm^2$.**

| Diameter Ø mm | Filtration velocity $m^3/h/m^2$ | Outlet Ø mm | Flow rate $m^3/h$ | Code | Standard Packaging | Standard Weight Kg | Standard Volume $m^3$ |
|---|---|---|---|---|---|---|---|
| **1050** | 20 | 63 | 17 | **00687** | 1 | 120 | 2.45 |
| | 30-40 | 75 | 25-34 | **00694** | 1 | 120 | 2.45 |
| | 50 | 90 | 43 | **00707** | 1 | 120 | 2.45 |
| **1200** | 20-30 | 75 | 22-33 | **00688** | 1 | 155 | 3.38 |
| | 40-50 | 90 | 45-56 | **00702** | 1 | 155 | 3.38 |
| **1400** | 20 | 75 | 30 | **00689** | 1 | 198 | 4.75 |
| | 30 | 90 | 46 | **00696** | 1 | 198 | 4.75 |
| | 40 | 110 | 61 | **00703** | 1 | 198 | 4.75 |
| **1600** | 20 | 90 | 40 | **00690** | 1 | 255 | 6.13 |
| | 30-40 | 110 | 60-80 | **00697** | 1 | 255 | 6.13 |
| | 50 | 125 | 100 | **00710** | 1 | 255 | 6.13 |
| **1800** | 20 | 90 | 50 | **00691** | 1 | 285 | 7.25 |
| | 30 | 110 | 76 | **00698** | 1 | 285 | 7.25 |
| | 40 | 125 | 101 | **00705** | 1 | 285 | 7.25 |
| | 50 | 140 | 125 | **00711** | 1 | 285 | 7.25 |
| | 50 | 160 | 125 | **33312** | 1 | 285 | 7.25 |
| **2000** | 20 | 110 | 62 | **00692** | 1 | 355 | 9.92 |
| | 30 | 125 | 94 | **00699** | 1 | 355 | 9.92 |
| | 40 | 140 | 125 | **00706** | 1 | 355 | 9.92 |
| | 50 | 160 | 157 | **05083** | 1 | 355 | 9.92 |
| **2200** | 30 | 140 | 114 | **56937** | 1 | 450 | 13.9 |
| | 40 | 160 | 152 | **56938** | 1 | 450 | 13.9 |
| **2350** | 20 | 125 | 87 | **00693** | 1 | 500 | 17.04 |
| | 30 | 140 | 130 | **00700** | 1 | 500 | 17.04 |
| | 40 | 160 | 175 | **04935** | 1 | 500 | 17.04 |
| **2500** | 20 | 140 | 100 | **08695** | 1 | 750 | 19.5 |
| | 30 | 160 | 150 | **08696** | 1 | 750 | 19.5 |
| | 40 | 200 | 200 | **08697** | 1 | 750 | 19.5 |
| **3000** | 20 | 160 | 140 | **08699** | 1 | 1340 | 29.0 |
| | 30 | 200 | 212 | **08700** | 1 | 1340 | 29.0 |
| | 40 | 225 | 282 | **08701** | 1 | 1340 | 29.0 |

**Note: See technical features on next page**

**Filtration bed 1 m**



DOES NOT INCLUDE VALVE MANIFOLD

OTHER SPECIFIC DEPTHS MAY BE MADE TO ORDER.

THE Ø 3000 mm FILTERS WILL BE SHIPPED BY SPECIAL DELIVERY. ASK YOUR DEALER ABOUT ADDITIONAL COSTS.

Optional: Standard American sizes

## BOBBIN WOUND FILTERS

### Praga filters

Lid Ø 400 mm.

**Maximum pressure: 4 kg/cm²**

| Diameter Ø mm | Filtration velocity m³/h/m² | Outlet Ø mm | Flow rate m³/h | Code | Standard Packaging | Standard Weight Kg | Standard Volume m³ |
|---|---|---|---|---|---|---|---|
| 1050 | 20 | 63 | 17 | **09209** | 1 | 155 | 2.45 |
| | 30-40 | 75 | 25-34 | **00712** | 1 | 155 | 2.45 |
| | 50 | 90 | 43 | **00724** | 1 | 155 | 2.45 |
| 1200 | 20-30 | 75 | 22-33 | **00713** | 1 | 215 | 3.38 |
| | 40-50 | 90 | 45-56 | **00719** | 1 | 215 | 3.38 |
| 1400 | 20 | 75 | 30 | **09210** | 1 | 300 | 4.75 |
| | 30 | 90 | 46 | **00714** | 1 | 300 | 4.75 |
| | 40-50 | 110 | 61-77 | **00720** | 1 | 300 | 4.75 |
| 1600 | 20 | 90 | 40 | **09211** | 1 | 330 | 6.13 |
| | 30-40 | 110 | 60-80 | **00715** | 1 | 330 | 6.13 |
| | 50 | 125 | 100 | **00727** | 1 | 330 | 6.13 |
| 1800 | 20 | 90 | 50 | **09212** | 1 | 400 | 7.25 |
| | 30 | 110 | 76 | **00716** | 1 | 400 | 7.25 |
| | 40 | 125 | 101 | **00722** | 1 | 400 | 7.25 |
| | 50 | 140 | 125 | **00728** | 1 | 400 | 7.25 |
| 2000 | 20 | 110 | 62 | **09213** | 1 | 475 | 9.92 |
| | 30 | 125 | 94 | **00717** | 1 | 475 | 9.92 |
| | 40 | 140 | 125 | **00723** | 1 | 475 | 9.92 |
| | 50 | 160 | 157 | **05132** | 1 | 475 | 9.92 |
| 2200 | 30 | 140 | 114 | **57812** | 1 | 560 | 13.9 |
| | 40 | 160 | 152 | **57813** | 1 | 560 | 13.9 |
| 2350 | 20 | 125 | 87 | **09214** | 1 | 630 | 17.04 |
| | 30 | 140 | 130 | **09217** | 1 | 630 | 17.04 |
| | 40 | 160 | 175 | **09220** | 1 | 630 | 17.04 |
| 2500 | 20 | 140 | 100 | **09215** | 1 | 930 | 19.5 |
| | 30 | 160 | 150 | **09218** | 1 | 930 | 19.5 |
| | 40 | 200 | 200 | **09221** | 1 | 930 | 19.5 |
| 3000 | 20 | 160 | 140 | **09216** | 1 | 1630 | 29.0 |
| | 30 | 200 | 212 | **09219** | 1 | 1630 | 29.0 |
| | 40 | 225 | 282 | **09222** | 1 | 1630 | 29.0 |

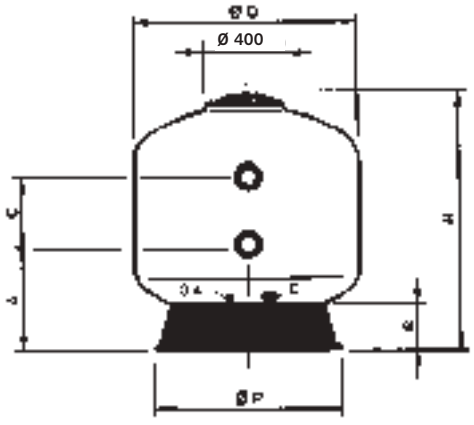


| Ø (mm) | 1050 | 1200 | 1400 | 1600 | 1800 | 2000 | 2200 | 2350 | 2500 | 3000 |
|---|---|---|---|---|---|---|---|---|---|---|
| Depth of sand medium (m) | 1 | 1 | 1 | 1 | 1 | 1 | 1 | 1 | 1 | 1 |
| H (mm) | 1640 | 1780 | 1755 | 1835 | 1875 | 2040 | 2440 | 2520 | 2550 | 2750 |
| B (mm) | 200 | 230 | 240 | 260 | 280 | 300 | 340 | 340 | 340 | 350 |
| A (mm) | 540 | 570 | 585 | 680 | 720 | 790 | 950 | 965 | 1080 | 1100 |
| C (mm) | 645 | 640 | 610 | 515 | 465 | 510 | 510 | 600 | 450 | 440 |
| Ø P (mm) | 755 | 940 | 1085 | 1230 | 1370 | 1550 | 1830 | 1859 | 2000 | 2365 |
| E (mm) | 90 | 90 | 90 | 140 | 140 | 140 | 140 | 140 | 140 | 140 |
| Filtration surface areas (m²) | 0.86 | 1.13 | 1.54 | 2.01 | 2.54 | 3.14 | 3.80 | 4.34 | 4.90 | 7.07 |
| Volume (l) | 1050 | 1500 | 2000 | 2600 | 3400 | 4400 | 6520 | 8045 | 9050 | 12800 |
| Sand load (kg) | 950 | 1375 | 1650 | 2150 | 2800 | 3800 | 4650 | 5275 | 5950 | 8600 |
| Gravel load (kg) | 300 | 300 | 450 | 675 | 750 | 1050 | 1900 | 1800 | 2200 | 3300 |
| Grade 1 glass load (57011) (kg) | 648 | 872 | 1091 | 1465 | 1844 | 2519 | 3388 | 3667 | 4220 | 6160 |
| Grade 2 glass load (57012) (kg) | 212 | 285 | 356 | 479 | 602 | 823 | 1107 | 1198 | 1378 | 2012 |
| Grade 2 glass load (57012) (kg) | 233 | 313 | 392 | 527 | 663 | 906 | 1218 | 1319 | 1518 | 2215 |
| Total operating weight (kg) | 2000 | 2700 | 3700 | 4900 | 6100 | 7900 | 11200 | 12550 | 13760 | 20200 |

**Filtration bed 1 m**

# BOBBIN WOUND FILTERS



## 2.5 bar OC-1 Praga filters

Filters manufactured with a resin and fibreglass bobbin.

- Maximum working pressure: 2.5 bar
- Maximum temperature: 50ºC.
- Height of filter bed: 1 m or 1.2 m
- Colour: RAL 6027.
- Ø400 mm plastic lid.
- Ø¾" manual air bleed valve.
- Special interiors with 3mm slot arms.
- PVC connections.
- Average discharge of Ø90 mm in models Ø1050 to Ø1400 and Ø140 mm in models Ø1600 to Ø3000.
- Ø¾" manual water bleed valve.
- **Filter suitable for OC-1 medium only. Not suitable for sand, glass or other type of filtration media.**



**OC-1 filtration medium**

**Maximum pressure: 2.5 kg/cm².**

| Diameter Ø mm | Filtration velocity m³/h/m² | Outlet Ø mm | Flow rate m³/h | Code | Standard Packaging | Standard Weight Kg | Standard Volume m³ |
|---|---|---|---|---|---|---|---|
| 1050 | 20 | 63 | 17 | **00687 OC1** | 1 | 286 | - |
| | 30/40 | 75 | 25/34 | **00694 OC1** | 1 | 286 | - |
| | 50 | 90 | 43 | **00707 OC1** | 1 | 286 | - |
| 1200 | 20/30 | 75 | 22/33 | **00688 OC1** | 1 | 354 | - |
| | 40/50 | 90 | 45/56 | **00702 OC1** | 1 | 354 | - |
| 1400 | 20 | 75 | 30 | **00689 OC1** | 1 | 504 | - |
| | 30 | 90 | 46 | **00696 OC1** | 1 | 504 | - |
| | 40/50 | 110 | 61/77 | **00703 OC1** | 1 | 504 | - |
| 1600 | 20 | 90 | 40 | **00690 OC1** | 1 | 600 | - |
| | 30/40 | 110 | 60/80 | **00697 OC1** | 1 | 600 | - |
| | 50 | 125 | 100 | **00710 OC1** | 1 | 600 | - |
| 1800 | 20 | 90 | 50 | **00691 OC1** | 1 | 744 | - |
| | 30 | 110 | 76 | **00698 OC1** | 1 | 744 | - |
| | 40 | 125 | 101 | **00705 OC1** | 1 | 744 | - |
| | 50 | 140 | 125 | **00711 OC1** | 1 | 744 | - |
| | 50 | 160 | 125 | **33312 OC1** | 1 | 744 | - |
| 2000 | 20 | 110 | 62 | **00692 OC1** | 1 | 997 | - |
| | 30 | 125 | 94 | **00699 OC1** | 1 | 997 | - |
| | 40 | 140 | 125 | **00706 OC1** | 1 | 997 | - |
| | 50 | 160 | 157 | **05083 OC1** | 1 | 997 | - |

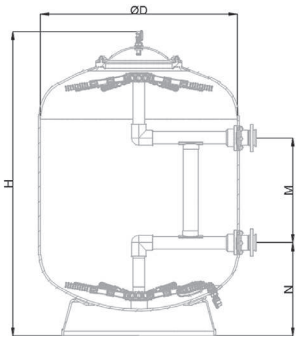


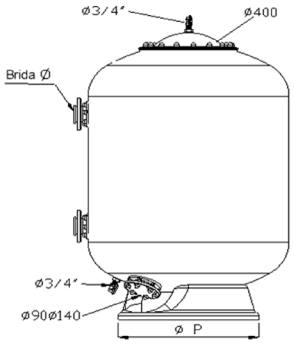


| Ø (mm) | 1050 | 1200 | 1400 | 1600 | 1800 | 2000 |
|---|---|---|---|---|---|---|
| H (mm) | 1640 | 1780 | 1755 | 1835 | 1875 | 2040 |
| M (mm) | 645 | 640 | 610 | 515 | 465 | 510 |
| N (mm) | 540 | 570 | 585 | 680 | 720 | 790 |
| P (mm) | 755 | 940 | 1085 | 1230 | 1370 | 1550 |
| Filtration surface areas (m²) | 0.86 | 1.13 | 1.54 | 2.01 | 2.54 | 3.14 |
| OC-1 load (kg) | 176 | 229 | 319 | 385 | 494 | 667 |

NB: Coding options according to table on page 488

THIS TABLE ONLY COVERS HIGH PERFORMANCE OSLO AND OLOT BOBBIN WOUND FILTERS

# BOBBIN WOUND FILTERS

## Vertical high performance bobbin wound filters



Oslo Olot

DOES NOT INCLUDE VALVE MANIFOLD

General features:
- 100% resistant to corrosion unlike conventional steel filters
- Maximum operating temperature 50º C
- Comply with European standards for pressure vessels 97/23/CE included in section 3 of article 3
- Hydraulic pressure test 1.5 times the maximum admissible pressure

Technical features of internal components:
- Internal components and pipe in PVC
- Laterals and nozzles in PP
- Airwash connection in models with underdrain nozzle plates
- Bolts, nuts and washers in AISI-316
- EPDM seals and gaskets.

Advantages of using an underdrain nozzle plate system over the conventional lateral system:
- There are no areas beneath the nozzles for water to stagnate as could occur in a lateral system
- Optimum filter bed back wash with an uniform water distribution
- Possibility of air wash with consequent saving of clean water
- The lateral manhole is recommended for sand discharge

The characteristics of liquids to be filtered should be indicated clearly when requesting ozone or other chemical resistant coatings for the filter interior.



RECOMMENDED SAND, GRAVEL AND GLASS LOADS

| **SINGLE-LAYER - Collector arms - Filtration bed 1.2 m in depth** | | | | | | | | | | | | | |
|---|---|---|---|---|---|---|---|---|---|---|---|---|---|
| **Diameter mm** | | **1050** | **1200** | **1400** | **1600** | **1800** | **2000** | **2200** | **2350** | **2500** | **2600** | **2800** | **3000** |
| Sand load (kg) | | 1300 | 1775 | 2300 | 3000 | 3800 | 4650 | 5625 | 6300 | 7075 | 8176 | 9483 | 10575 |
| Gravel load (kg) | | 300 | 350 | 500 | 775 | 850 | 1150 | 1400 | 1800 | 1975 | 2123 | 2463 | 3850 |
| Grade 1 glass load (57011) (kg) | | 832 | 1107 | 1457 | 1961 | 2419 | 3015 | 3651 | 4205 | 4699 | 5351 | 6207 | 7471 |
| Grade 2 glass load (57012) (kg) | | 272 | 361 | 476 | 641 | 790 | 985 | 1193 | 1373 | 1535 | 1748 | 2027 | 2440 |
| Grade 2 glass load (57012) (kg) | | 299 | 398 | 524 | 705 | 870 | 1084 | 1313 | 1512 | 1690 | 1924 | 2232 | 2687 |
| **MULTI--LAYER - Collector arms - Filtration bed 1.2 m in depth** | | | | | | | | | | | | | |
| **Diameter mm** | | **1050** | **1200** | **1400** | **1600** | **1800** | **2000** | **2200** | **2350** | **2500** | **2600** | **2800** | **3000** |
| Hydroanthracite (0.8-1.6) Kg | 600 mm | 450 | 575 | 775 | 1000 | 1275 | 1575 | 1900 | 2175 | 2450 | 2548 | 2956 | 3550 |
| Sand (0,4-0,8) (Kg) | 400 mm | 475 | 625 | 825 | 1100 | 1400 | 1700 | 2050 | 2350 | 2675 | 2973 | 3448 | 3850 |
| Gravel (1-2) (Kg) | 100 mm | 150 | 175 | 250 | 300 | 400 | 500 | 600 | 675 | 775 | 796 | 924 | 1100 |
| Gravel (2-3) (Kg) | 100 mm (1) | 300 | 350 | 500 | 775 | 850 | 1150 | 1400 | 1800 | 1975 | 2123 | 2463 | 3850 |
| **SINGLE-LAYER - Nozzle plate - Filtration bed 1.2 m in depth** | | | | | | | | | | | | | |
| **Diameter mm** | | **1050** | **1200** | **1400** | **1600** | **1800** | **2000** | **2200** | **2350** | **2500** | **2600** | **2800** | **3000** |
| Sand load (kg) | | 1300 | 1775 | 2300 | 3000 | 3800 | 4050 | 5625 | 6300 | 7075 | 8176 | 9483 | 10575 |
| Gravel load (kg) | | 150 | 175 | 250 | 300 | 400 | 500 | 600 | 675 | 775 | 796 | 924 | 1100 |
| Grade 1 glass load (57011) (kg) | | 757 | 1019 | 1332 | 1725 | 2195 | 2376 | 3253 | 3645 | 4102 | 4690 | 5441 | 6102 |
| Grade 2 glass load (57012) (kg) | | 247 | 333 | 435 | 563 | 717 | 776 | 1063 | 1191 | 1340 | 1532 | 1777 | 1993 |
| Grade 2 glass load (57012) (kg) | | 272 | 367 | 479 | 620 | 789 | 845 | 1170 | 1311 | 1475 | 1687 | 1957 | 2194 |
| **MULTI--LAYER - Nozzle plate - Filtration bed 1.2 m in depth** | | | | | | | | | | | | | |
| **Diameter mm** | | **1050** | **1200** | **1400** | **1600** | **1800** | **2000** | **2200** | **2350** | **2500** | **2600** | **2800** | **3000** |
| Hydroanthracite (0.8-1.6) Kg | 600 mm | 450 | 575 | 775 | 1000 | 1275 | 1575 | 1900 | 2175 | 2450 | 2548 | 2956 | 3550 |
| Sand (0,4-0,8) (Kg) | 400 mm | 475 | 625 | 825 | 1100 | 1400 | 1700 | 2050 | 2350 | 2675 | 2973 | 3448 | 3850 |
| Gravel (1-2) (Kg) | 100 mm | 150 | 175 | 250 | 300 | 400 | 500 | 600 | 675 | 775 | 796 | 924 | 1100 |
| Gravel (3-5) (Kg) | 100 mm | 150 | 175 | 250 | 300 | 400 | 500 | 600 | 675 | 775 | 796 | 924 | 1100 |
| **MULTI--LAYER - Nozzle plate - Filtration bed 1.5 m in depth** | | | | | | | | | | | | | |
| **Diameter mm** | | **1050** | **1200** | **1400** | **1600** | **1800** | **2000** | **2200** | **2350** | **2500** | **2600** | **2800** | **3000** |
| Hydroanthracite (0.8-1.6) Kg | 600 mm | 450 | 575 | 775 | 1000 | 1275 | 1575 | 1900 | 2175 | 2450 | 2548 | 2956 | 3550 |
| Sand (0,4-0,8) (Kg) | 600 mm | 725 | 950 | 1250 | 1650 | 2100 | 2550 | 3100 | 3525 | 4025 | 4460 | 5172 | 5775 |
| Gravel (1-2) (Kg) | 100 mm | 150 | 175 | 250 | 300 | 400 | 500 | 600 | 675 | 775 | 796 | 924 | 1100 |
| Gravel (2-3) (Kg) | 100 mm | 150 | 175 | 250 | 300 | 400 | 500 | 600 | 675 | 775 | 796 | 924 | 1100 |
| Gravel (3-5) (Kg) | 100 mm | 150 | 175 | 250 | 300 | 400 | 500 | 600 | 675 | 775 | 796 | 924 | 1100 |

Densities: Hydroanthracite = 0.8 Kg/dm$^3$ - Sand = 1.4 Kg/dm$^3$ - Gravel = 1.5 Kg/dm$^3$

(1) 100 mm above laterals

**Filtration bed 1.2 m**

# BOBBIN WOUND FILTERS

## Oslo filters



DOES NOT INCLUDE VALVE MANIFOLD

OTHER SPECIFIC DEPTHS MAY BE MADE TO ORDER.

THE Ø 3000 mm FILTERS WILL BE SHIPPED BY SPECIAL DELIVERY. ASK YOUR DEALER ABOUT ADDITIONAL COSTS.

Optional:
Standard American sizes

**Characteristics:**
Vertical high performance bobbin wound filters

**Collector system:**
A - Conventional collector system using laterals with 0.3 mm slots. For working pressure of 2.5 and 4 bars.
B - Nozzle plate with 0.5 mm slots. For working pressure of 2.5 and 4 bars.

**Fitted with:**
- Pressure gauge panel
- Manual air vent and water purge

**Options:**
- Positioning of water connections flanges, sightglasses and manhole covers are provided according to customer specification.
- Diameters of connections and purges depend on customer specifications
- For other variations such as height, chemical resistant internal coating, pressure rating, etc., please enquire.

**Maximum pressure: 2.5 kg/cm².**

| Diameter Ø mm | Filtration velocity m³/h/m² | Outlet Ø mm | Flow rate m³/h | Code | Standard Packaging | Standard Weight Kg | Standard Volume m³ |
|---|---|---|---|---|---|---|---|
| 1050 | 30 | 75 | 25 | **04611** | 1 | 207 | 2.5 |
| | 40 | 90 | 34 | **04612** | 1 | 207 | 2.5 |
| 1200 | 30 | 75 | 33 | **04613** | 1 | 234 | 3.2 |
| | 40 | 110 | 45 | **04650** | 1 | 234 | 3.2 |
| 1400 | 30 | 90 | 46 | **04615** | 1 | 294 | 4.7 |
| | 40 | 125 | 61 | **04616** | 1 | 294 | 4.7 |
| 1600 | 30 | 110 | 60 | **04619** | 1 | 360 | 6.2 |
| | 40 | 140 | 80 | **04651** | 1 | 360 | 6.2 |
| 1800 | 30 | 125 | 76 | **04623** | 1 | 416 | 8.5 |
| | 40 | 160 | 101 | **04624** | 1 | 416 | 8.5 |
| 2000 | 30 | 125 | 94 | **04626** | 1 | 483 | 10.3 |
| | 40 | 160 | 125 | **04652** | 1 | 483 | 10.3 |
| 2200 | 30 | 140 | 114 | **56935** | 1 | 567 | 14.8 |
| | 40 | 160 | 152 | **56936** | 1 | 567 | 14.8 |
| 2350 | 30 | 140 | 130 | **08693** | 1 | 651 | 15.8 |
| | 40 | 200 | 175 | **08694** | 1 | 651 | 15.8 |
| 2500 | 30 | 160 | 150 | **08704** | 1 | 820 | 20.8 |
| | 40 | 225 | 200 | **08706** | 1 | 820 | 20.8 |
| 3000 | 30 | 200 | 212 | **08708** | 1 | 1300 | 31.0 |
| | 40 | 250 | 282 | **08710** | 1 | 1300 | 31.0 |



**Lateral manhole Ø 400 mm**



**Nozzle plate**



**Sightglass**

**Filtration bed 1.2 m**



LARGE FILTERS OF MORE THAN 2500 mm WILL BE SHIPPED BY SPECIAL DELIVERY. ASK YOUR DEALER ABOUT ADDITIONAL COSTS.

For filters with nozzle plates, a side opening (Ø 400 mm or Ø 225 mm) should be made for emptying the filter medium.

Optional:
Standard American sizes

## BOBBIN WOUND FILTERS

### Oslo filters

**Maximum pressure: 4 kg/cm²**

| Diameter Ø mm | Filtration velocity m³/h/m² | Outlet Ø mm | Flow rate m³/h | Code | Standard Packaging | Standard Weight Kg | Standard Volume m³ |
|---|---|---|---|---|---|---|---|
| 1050 | 30 | 75 | 25 | **05168** | 1 | 230 | 2.5 |
| | 40 | 90 | 34 | **05173** | 1 | 230 | 2.5 |
| 1200 | 30 | 75 | 33 | **05169** | 1 | 265 | 3.2 |
| | 40 | 110 | 45 | **05174** | 1 | 265 | 3.2 |
| 1400 | 30 | 90 | 46 | **07436** | 1 | 364 | 4.7 |
| | 40 | 125 | 61 | **07437** | 1 | 364 | 4.7 |
| 1600 | 30 | 110 | 60 | **05170** | 1 | 442 | 6.2 |
| | 40 | 140 | 80 | **05175** | 1 | 442 | 6.2 |
| 1800 | 30 | 125 | 76 | **07438** | 1 | 518 | 8.5 |
| | 40 | 160 | 101 | **07439** | 1 | 518 | 8.5 |
| 2000 | 30 | 125 | 94 | **05171** | 1 | 644 | 10.3 |
| | 40 | 160 | 125 | **05176** | 1 | 644 | 10.3 |
| 2200 | 30 | 140 | 114 | **57810** | 1 | 715 | 14.8 |
| | 40 | 160 | 152 | **57811** | 1 | 715 | 14.8 |
| 2350 | 30 | 140 | 130 | **05172** | 1 | 786 | 15.8 |
| | 40 | 200 | 175 | **05177** | 1 | 786 | 15.8 |
| 2500 | 30 | 160 | 150 | **08712** | 1 | 964 | 20.8 |
| | 40 | 225 | 200 | **08714** | 1 | 964 | 20.8 |
| 3000 | 30 | 200 | 212 | **08716** | 1 | 1613 | 31.0 |
| | 40 | 250 | 282 | **08718** | 1 | 1613 | 31.0 |

| Type | Multi-layer collector arms | | | | | Multi-layer nozzle plate | | | | |
|---|---|---|---|---|---|---|---|---|---|---|
| Ø D (mm) | Sand load (kg) | Gravel load kg | Grade 1 glass load (57011) kg | Grade 2 glass load (57012) kg | Grade 3 glass load (57013) kg | Sand load (kg) | Gravel load kg | Grade 1 glass load (57011) kg | Grade 2 glass load (57012) kg | Grade 3 glass load (57013) kg |
| **1050** | 1300 | 300 | 832 | 272 | 299 | 1300 | 150 | 757 | 247 | 272 |
| **1200** | 1775 | 350 | 1107 | 361 | 398 | 1775 | 175 | 1019 | 333 | 367 |
| **1400** | 2300 | 500 | 1457 | 476 | 524 | 2300 | 250 | 1332 | 435 | 479 |
| **1600** | 3000 | 775 | 1961 | 641 | 705 | 3000 | 300 | 1725 | 563 | 620 |
| **1800** | 3800 | 850 | 2419 | 790 | 870 | 3800 | 400 | 2195 | 717 | 789 |
| **2000** | 4650 | 1150 | 3015 | 985 | 1084 | 4050 | 500 | 2376 | 776 | 845 |
| **2200** | 5625 | 1400 | 3651 | 1193 | 1313 | 5625 | 600 | 3253 | 1063 | 1170 |
| **2350** | 6300 | 1800 | 4205 | 1373 | 1512 | 6300 | 675 | 3645 | 1191 | 1311 |
| **2500** | 7075 | 1975 | 4699 | 1535 | 1690 | 7075 | 775 | 4102 | 1340 | 1475 |
| **3000** | 10575 | 3850 | 7471 | 2440 | 2687 | 10575 | 1100 | 6102 | 1993 | 2194 |

NB: Coding options according to table on page 488

## BOBBIN WOUND FILTERS

### Oslo filters

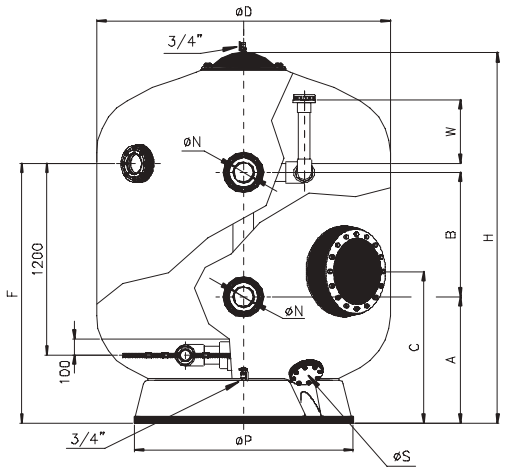


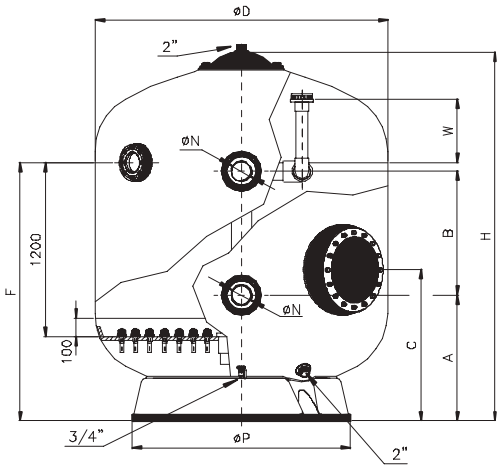


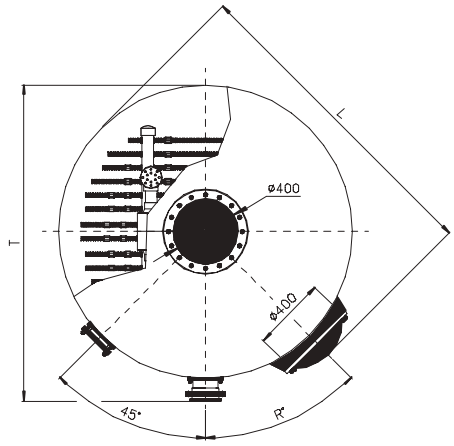


Oslo collector arms

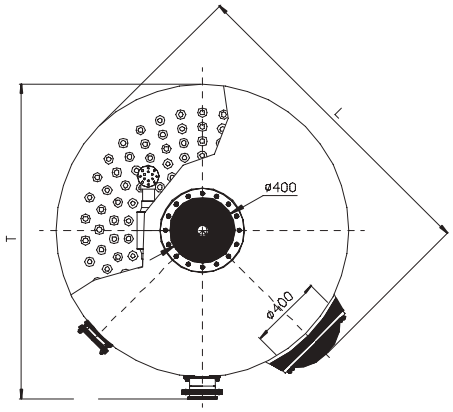


Oslo nozzle plate

| Ø D (mm) | Filtration velocity (m³/h/m²) | Ø N (mm) | | 2,5 bar Code | 4 bar Code | Flow rate m³/h | Filtration area (m²) | Volume (l) | A (mm) | B (mm) | C (mm) | F (mm) | H (mm) | L (mm) | Ø P (mm) | R | Ø S (mm) | T (mm) | W (mm) | Total operating weight (kg) |
|---|---|---|---|---|---|---|---|---|---|---|---|---|---|---|---|---|---|---|---|---|
| **1050** | 30 | 75 | DN65 | **04611** | **05168** | 25 | 0.86 | 1500 | 650 | 940 | 770 | 1550 | 2070 | 1240 | 750 | 55° | 90 | 1220 | 325 | 2450 |
| | 40 | 90 | DN80 | **04612** | **05173** | 34 | | | | | | | | | | | | | | |
| **1200** | 30 | 75 | DN65 | **04613** | **05169** | 33 | 1.13 | 1860 | 670 | 830 | 770 | 1550 | 2080 | 1390 | 940 | 45° | 90 | 1380 | 350 | 3000 |
| | 40 | 110 | DN100 | **04650** | **05174** | 45 | | | | | | | | | | | | | | |
| **1400** | 30 | 90 | DN80 | **04615** | **07436** | 46 | 1.54 | 2700 | 680 | 820 | 840 | 1570 | 2175 | 1590 | 1085 | 45° | 90 | 1570 | 350 | 4300 |
| | 40 | 125 | DN110 | **04616** | **07437** | 61 | | | | | | | | | | | | | | |
| **1600** | 30 | 110 | DN100 | **04619** | **05170** | 60 | 2.01 | 3620 | 780 | 800 | 870 | 1625 | 2310 | 1790 | 1230 | 45° | 140 | 1780 | 400 | 5825 |
| | 40 | 140 | DN125 | **04651** | **05175** | 80 | | | | | | | | | | | | | | |
| **1800** | 30 | 125 | DN110 | **04623** | **07438** | 76 | 2.54 | 4725 | 790 | 780 | 950 | 1625 | 2320 | 1990 | 1370 | 45° | 140 | 2000 | 400 | 7300 |
| | 40 | 160 | DN150 | **04624** | **07439** | 101 | | | | | | | | | | | | | | |
| **2000** | 30 | 125 | DN110 | **04626** | **05171** | 94 | 3.14 | 5800 | 790 | 840 | 950 | 1695 | 2460 | 2190 | 1550 | 45° | 140 | 2200 | 400 | 9000 |
| | 40 | 160 | DN150 | **04652** | **05176** | 125 | | | | | | | | | | | | | | |
| **2200** | 30 | 140 | DN125 | **56935** | **57810** | 114 | 3.80 | 7080 | 960 | 700 | 1100 | 1750 | 2580 | 2390 | 1860 | 45° | 140 | 2400 | 450 | 12500 |
| | 40 | 160 | DN150 | **56936** | **57811** | 152 | | | | | | | | | | | | | | |
| **2350** | 30 | 140 | DN125 | **08693** | **05172** | 130 | 4.34 | 8800 | 1065 | 700 | 1130 | 1850 | 2720 | 2550 | 1860 | 45° | 140 | 2550 | 500 | 13750 |
| | 40 | 200 | DN175 | **08694** | **05177** | 175 | | | | | | | | | | | | | | |
| **2500** | 30 | 160 | DN150 | **08704** | **08712** | 150 | 4.90 | 9850 | 1125 | 450 | 1080 | 1760 | 2750 | 2700 | 2000 | 45° | 140 | 2750 | 500 | 14885 |
| | 40 | 225 | DN200 | **08706** | **08714** | 200 | | | | | | | | | | | | | | |
| **3000** | 30 | 200 | DN175 | **08708** | **08716** | 212 | 7.07 | 15350 | 1150 | 600 | 1140 | 1870 | 2950 | 3200 | 2365 | 45° | 140 | 3200 | 500 | 21615 |
| | 40 | 250 | DN225 | **08710** | **08718** | 282 | | | | | | | | | | | | | | |

**Filtration bed 1,2 m y 1.5 m**

# BOBBIN WOUND FILTERS



DOES NOT INCLUDE VALVE MANIFOLD

THE Ø 3000 mm FILTERS WILL BE SHIPPED BY SPECIAL DELIVERY. ASK YOUR DEALER ABOUT ADDITIONAL COSTS.

Optional:
Standard American sizes

## Olot filters

**Features:** **According to DIN 19605/19643 Standard**

**Collector system:**
Nozzle plate with 0.5 mm slots, working pressure 2.5 bar.

**Fitted with:**
- Pressure gauge panel
- Manual air vent and water purge
- Air wash connection flange
- Ø 400 mm manhole

**Options:**
- Positioning of water connections flanges, sightglasses and manhole covers are provided according to customer specification.
- Diameters of connections and purges depend on customer specifications
- For other variations such as height, chemical resistant internal coating, pressure rating, etc., please enquire.

**Maximum pressure: 2 kg/cm²**

**Filtration bed 1.2 m**

| Diameter Ø mm | Filtration velocity m³/h/m² | Outlet Ø mm | Flow rate m³/h | Code | Standard Packaging | Standard Weight Kg | Standard Volume m³ |
|---|---|---|---|---|---|---|---|
| **1050** | 30 | 110 | 25 | **07355** | 1 | 265 | 2.95 |
| **1200** | 30 | 125 | 33 | **07356** | 1 | 345 | 3.86 |
| **1400** | 30 | 140 | 46 | **07447** | 1 | 380 | 5.22 |
| **1600** | 30 | 160 | 60 | **07357** | 1 | 420 | 7.09 |
| **1800** | 30 | 200 | 76 | **07448** | 1 | 470 | 9.09 |
| **2000** | 30 | 225 | 94 | **07358** | 1 | 540 | 11.25 |
| **2200** | 30 | 225 | 114 | **56934** | 1 | - | 15.34 |
| **2350** | 30 | 250 | 130 | **07359** | 1 | 825 | 16.20 |
| **2500** | 30 | 250 | 150 | **19335** | 1 | 940 | 24.40 |
| **2600** | 30 | 250 | 160 | **23969** | 1 | 1021 | 25.21 |
| **2800** | 30 | 250 | 185 | **23970** | 1 | 1135 | 29.50 |
| **3000** | 30 | 250 | 212 | **19336** | 1 | 1425 | 30.00 |

**Filtration bed 1.5 m**

| Diameter Ø mm | Filtration velocity m³/h/m² | Outlet Ø mm | Flow rate m³/h | Code | Standard Packaging | Standard Weight Kg | Standard Volume m³ |
|---|---|---|---|---|---|---|---|
| **1050** | 30 | 110 | 25 | **18227** | 1 | 285 | 3.21 |
| **1200** | 30 | 125 | 33 | **18228** | 1 | 385 | 4.20 |
| **1400** | 30 | 140 | 46 | **18229** | 1 | 420 | 5.68 |
| **1600** | 30 | 160 | 60 | **18230** | 1 | 460 | 7.69 |
| **1800** | 30 | 200 | 76 | **18231** | 1 | 515 | 9.58 |
| **2000** | 30 | 225 | 94 | **18232** | 1 | 625 | 12.90 |
| **2350** | 30 | 250 | 130 | **18233** | 1 | 920 | 17.50 |
| **2500** | 30 | 250 | 150 | **19337** | 1 | 1010 | 25.87 |
| **2600** | 30 | 250 | 160 | **23971** | 1 | 1144 | 26.51 |
| **2800** | 30 | 250 | 185 | **23972** | 1 | 1264 | 30.63 |
| **3000** | 30 | 250 | 212 | **19338** | 1 | 1590 | 32.12 |

NB: Coding options according to table on page 488

## BOBBIN WOUND FILTERS

### Olot filters

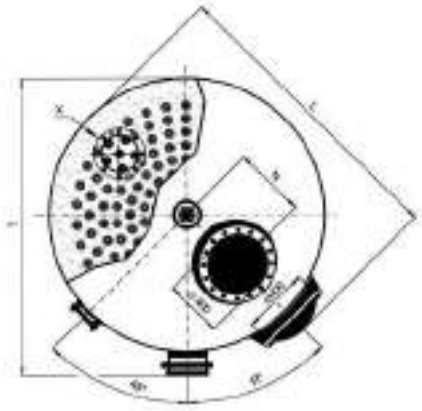

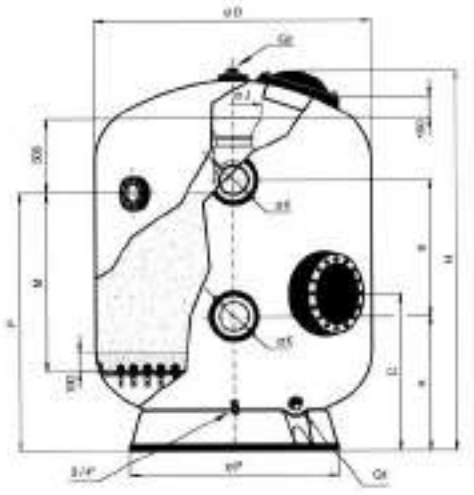

| | | | | | | | | | | | | | |
|---|---|---|---|---|---|---|---|---|---|---|---|---|---|
| **Ø D (mm)** | | **1050** | **1200** | **1400** | **1600** | **1800** | **2000** | **2200** | **2350** | **2500** | **2600** | **2800** | **3000** |
| **Filtration velocity (m³/h/m²)** | | 30 | 30 | 30 | 30 | 30 | 30 | 30 | 30 | 30 | 30 | 30 | 30 |
| **Ø K (mm)** | | 110 | 125 | 140 | 160 | 200 | 225 | 225 | 250 | 250 | 250 | 250 | 250 |
| | | DN100 | DN110 | DN125 | DN150 | DN175 | DN200 | DN200 | DN225 | DN225 | DN225 | DN225 | DN225 |
| **FILTER BED 1.2 m** | **Code** | **07355** | **07356** | **07447** | **07357** | **07448** | **07358** | **56934** | **07359** | **19335** | **23969** | **23970** | **19336** |
| | **H (mm)** | 2380 | 2400 | 2420 | 2520 | 2570 | 2660 | 2690 | 2800 | 2850 | 2920 | 3030 | 2900 |
| | **F (mm)** | 1615 | 1635 | 1645 | 1690 | 1740 | 1750 | 1820 | 1870 | 1870 | 1880 | 1920 | 1880 |
| | **Vol. (l)** | 1735 | 2175 | 3000 | 4350 | 5450 | 6650 | 7930 | 9575 | 11700 | 12800 | 15500 | 18000 |
| | **Total operating weight (kg)** | 2600 | 3325 | 4475 | 6250 | 7500 | 9625 | 11815 | 13600 | 15500 | 16650 | 19500 | 22500 |
| **FILTER BED 1.5 m** | **Code** | **18227** | **18228** | **18229** | **18230** | **18231** | **18232** | **65547** | **18233** | **19337** | **23971** | **23972** | **19338** |
| | **H (mm)** | 2680 | 2700 | 2720 | 2820 | 2870 | 2960 | 2990 | 3100 | 3150 | 3220 | 3330 | 3200 |
| | **F (mm)** | 1915 | 1935 | 1945 | 1990 | 2040 | 2050 | 2120 | 2170 | 2170 | 2180 | 2220 | 2180 |
| | **Vol (l)** | 1995 | 2745 | 3590 | 5150 | 6350 | 7650 | 9070 | 11255 | 12950 | 14100 | 16900 | 19700 |
| | **Total operating weight (kg)** | 3000 | 3900 | 5300 | 7150 | 8750 | 11250 | 13130 | 15800 | 17950 | 19400 | 22600 | 26250 |
| **Flow rate (m³/h)** | | 25 | 33 | 46 | 60 | 76 | 94 | 114 | 130 | 150 | 160 | 185 | 212 |
| **Filtration area (m²)** | | 0,86 | 1,13 | 1,54 | 2,01 | 2,54 | 3,14 | 3,80 | 4,34 | 4,90 | 5,31 | 6,16 | 7,07 |
| **Number of injectors** | | 59 | 78 | 102 | 134 | 168 | 200 | 200 | 286 | 333 | 333 | 381 | 433 |
| **A (mm)** | | 700 | 700 | 830 | 830 | 900 | 950 | 950 | 1050 | 1100 | 1160 | 1230 | 1140 |
| **B (mm)** | | 1000 | 1000 | 900 | 950 | 920 | 760 | 750 | 680 | 600 | 600 | 650 | 600 |
| **C (mm)** | | 830 | 840 | 840 | 870 | 950 | 950 | 1130 | 1130 | 1100 | 1200 | 1230 | 1220 |
| **L (mm)** | | 1240 | 1390 | 1600 | 1810 | 1990 | 2194 | 2390 | 2550 | 2720 | 2800 | 3000 | 3220 |
| **Ø P (mm)** | | 730 | 940 | 1080 | 1230 | 1390 | 1550 | 1860 | 1850 | 2050 | 2050 | 2200 | 2360 |
| **T (mm)** | | 1220 | 1380 | 1570 | 1780 | 2000 | 2240 | 2450 | 2630 | 2750 | 2800 | 3000 | 3270 |
| **N (mm)** | | 0 | 130 | 130 | 400 | 450 | 480 | 520 | 550 | 700 | 600 | 600 | 720 |
| **Ø X sightglass (mm)** | | 125 | 250 | 250 | 250 | 250 | 250 | 250 | 250 | 250 | 250 | 250 | 250 |
| **° R** | | 55° | 45° | 45° | 45° | 45° | 45° | 45° | 45° | 45° | 45° | 45° | 45° |
| **Ø J (mm)** | | 380 | 380 | 380 | 380 | 380 | 380 | 380 | 600 | 600 | 600 | 600 | 600 |
| **Ø G1** | | 2" | 2" | 2" | 2" | 75 | 75 | 75 | 75 | 75 | 90 | 110 | 140 |
| **Ø G2*** | | 2" | 2" | 2" | 2" | 2" | 2" | 75 | 75 | 75 | 75 | 75 | 75 |

* In models Ø 1050 mm, 1200 mm and 1400 mm, this fitting is fitted on to the cover.

# BOBBIN WOUND FILTERS

## Construction features of the filter according to DIN 18820:

- (1) Chemical protective gel-coat barrier isoneopenliglical type CSS-UP3.
Superior hardness and resistance to the abrasion of sand and salt water. Complies with German standard KTW recommendations and certified by LVHT.
The optional vinylester layer for protection against ozone is of the CCS-PHAS class.
- (2) Polyester reinforced laminated resin with randomly orientated fibreglass filament GF-UP1type.
- Reinforced in MW areas under greater stress with an additional woven matting, alternating non-aligned (4) with aligned fibres (3).
- A set of radial bobbin layers (5) (7) on the cylindrical part and a set of polar layers (6) along the entire filter body with type GF-UP1 made with numeric control machinery. The most essential feature of these filters is their mechanical resistance which enables them to withstand greater internal pressures.
- All filters are submitted to a seasoning process at a temperature of 60°C.

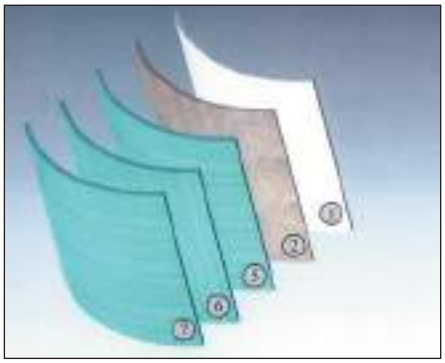





## Ø 1050 mm and Ø 1200 mm Rodas filters



**Ø 1050 mm**
**Ø 1200 mm**

**General features:**
- 100% resistant to corrosion unlike conventional steel filters
- Excellent relation between filter weight and its mechanical characteristics
- Maximum operating temperature 50º C
- Comply with European standards for pressure vessels 97/23/CE included in section 3 of article 3
- Hydraulic pressure test 1.5 times the maximum admissible pressure
- Resistance and thickness calculations are based on norms BS-4994 and AD Merkblatt N1

**Fitted with:**
- Pressure gauge panel
- Manual air vent and water purge
- Ø 400 mm lateral manhole and Ø 140 mm top port

**Characteristics of internal components:**
- Internal components and pipe in PVC
- PP laterals with 0.3 slots
- Bolts, nuts and washers in AISI-316
- EPDM seals and gaskets.

**Filter bed depth 0.6 m**

## BOBBIN WOUND FILTERS

### Ø 1050 mm and Ø 1200 mm Rodas filters



**Ø 1050 mm**
**Ø 1200 mm**

**Maximum pressure: 2.5 kg/cm²**

**Ø 1050 mm filters**

| Filter length (mm) | Filtration velocity m³/h/m² | Outlet Ø mm | Flow rate m³/h | Code | Standard Packaging | Standard Weight Kg | Standard Volume m³ |
|---|---|---|---|---|---|---|---|
| 1900 | 20 | 75 | 34 | **05102** | 1 | 230 | 2.95 |
| | 30 | 90 | 52 | **05105** | 1 | 230 | 2.95 |
| | 40 | 110 | 69 | **05108** | 1 | 230 | 2.95 |
| 2300 | 20 | 110 | 42 | **11331** | 1 | 280 | 3.57 |
| | 30 | 125 | 64 | **11332** | 1 | 280 | 3.57 |
| | 40 | 140 | 85 | **11333** | 1 | 280 | 3.57 |
| 2500 | 20 | 110 | 46 | **24842** | 1 | 305 | 3.88 |
| | 30 | 125 | 70 | **24843** | 1 | 305 | 3.88 |
| | 40 | 140 | 93 | **24844** | 1 | 305 | 3.88 |
| 2700 | 20 | 110 | 50 | **11334** | 1 | 330 | 4.20 |
| | 30 | 125 | 75 | **11335** | 1 | 330 | 4.20 |
| | 40 | 140 | 100 | **11336** | 1 | 330 | 4.20 |
| 3000 | 20 | 110 | 56 | **22647** | 1 | 370 | 4.67 |
| | 30 | 140 | 84 | **22648** | 1 | 370 | 4.67 |
| | 40 | 160 | 112 | **22649** | 1 | 370 | 4.67 |

**Ø 1200 mm filters**

| Filter length (mm) | Filtration velocity m³/h/m² | Outlet Ø mm | Flow rate m³/h | Code | Standard Packaging | Standard Weight Kg | Standard Volume m³ |
|---|---|---|---|---|---|---|---|
| 1900 | 20 | 110 | 39 | **22650** | 1 | 270 | 3.08 |
| | 30 | 125 | 59 | **22651** | 1 | 270 | 3.08 |
| | 40 | 140 | 79 | **22652** | 1 | 270 | 3.08 |
| 2300 | 20 | 110 | 48 | **22653** | 1 | 330 | 3.73 |
| | 30 | 140 | 73 | **22654** | 1 | 330 | 3.73 |
| | 40 | 160 | 97 | **22655** | 1 | 330 | 3.73 |
| 2500 | 20 | 125 | 53 | **24845** | 1 | 360 | 4.05 |
| | 30 | 140 | 79 | **24846** | 1 | 360 | 4.05 |
| | 40 | 160 | 106 | **24847** | 1 | 360 | 4.05 |
| 2700 | 20 | 125 | 57 | **22656** | 1 | 390 | 4.38 |
| | 30 | 140 | 86 | **22657** | 1 | 390 | 4.38 |
| | 40 | 160 | 115 | **22658** | 1 | 390 | 4.38 |
| 3000 | 20 | 125 | 64 | **22659** | 1 | 435 | 4.86 |
| | 30 | 140 | 96 | **22660** | 1 | 435 | 4.86 |
| | 40 | 160 | 129 | **22661** | 1 | 435 | 4.86 |

See the sand, gravel and glass media loads on the next page

Filter bed depth 0.6 m



Ø 1050 mm
Ø 1200 mm

## BOBBIN WOUND FILTERS

### Ø 1050 mm and Ø 1200 mm Rodas filters

Maximum pressure: 4 kg/cm²

**Ø 1050 mm filters**

| Filter length (mm) | Filtration velocity m³/h/m² | Outlet Ø mm | Flow rate m³/h | Code | Standard Packaging | Standard Weight Kg | Standard Volume m³ |
|---|---|---|---|---|---|---|---|
| 1900 | 20 | 75 | 34 | 07124 | 1 | 270 | 2.95 |
| | 30 | 90 | 52 | 07125 | 1 | 270 | 2.95 |
| | 40 | 110 | 69 | 07126 | 1 | 270 | 2.95 |
| 2300 | 20 | 110 | 42 | 11321 | 1 | 330 | 3.57 |
| | 30 | 125 | 64 | 11322 | 1 | 330 | 3.57 |
| | 40 | 140 | 85 | 11323 | 1 | 330 | 3.57 |
| 2500 | 20 | 110 | 46 | 25016 | 1 | 355 | 3.88 |
| | 30 | 125 | 70 | 25017 | 1 | 355 | 3.88 |
| | 40 | 140 | 93 | 25018 | 1 | 355 | 3.88 |
| 2700 | 20 | 110 | 50 | 11326 | 1 | 380 | 4.20 |
| | 30 | 125 | 75 | 11327 | 1 | 380 | 4.20 |
| | 40 | 140 | 100 | 11328 | 1 | 380 | 4.20 |
| 3000 | 20 | 110 | 56 | 22683 | 1 | 420 | 4.67 |
| | 30 | 140 | 84 | 22684 | 1 | 420 | 4.67 |
| | 40 | 160 | 112 | 20895 | 1 | 420 | 4.67 |

**Ø 1200 mm filters**

| Filter length (mm) | Filtration velocity m³/h/m² | Outlet Ø mm | Flow rate m³/h | Code | Standard Packaging | Standard Weight Kg | Standard Volume m³ |
|---|---|---|---|---|---|---|---|
| 1900 | 20 | 110 | 39 | 22685 | 1 | 310 | 3.08 |
| | 30 | 125 | 59 | 22686 | 1 | 310 | 3.08 |
| | 40 | 140 | 79 | 22687 | 1 | 310 | 3.08 |
| 2300 | 20 | 110 | 48 | 22688 | 1 | 375 | 3.73 |
| | 30 | 140 | 73 | 22689 | 1 | 375 | 3.73 |
| | 40 | 160 | 97 | 20897 | 1 | 375 | 3.73 |
| 2500 | 20 | 125 | 53 | 25019 | 1 | 410 | 4.05 |
| | 30 | 140 | 79 | 25020 | 1 | 410 | 4.05 |
| | 40 | 160 | 106 | 25021 | 1 | 410 | 4.05 |
| 2700 | 20 | 125 | 57 | 22690 | 1 | 440 | 4.38 |
| | 30 | 140 | 86 | 22691 | 1 | 440 | 4.38 |
| | 40 | 160 | 115 | 20898 | 1 | 440 | 4.38 |
| 3000 | 20 | 125 | 64 | 22692 | 1 | 480 | 4.86 |
| | 30 | 140 | 96 | 22693 | 1 | 480 | 4.86 |
| | 40 | 160 | 129 | 20899 | 1 | 480 | 4.86 |

| | Ø 1050 filters | | | | | Ø 1200 filters | | | | |
|---|---|---|---|---|---|---|---|---|---|---|
| Filter length (mm) | 1900 | 2300 | 2500 | 2700 | 3000 | 1900 | 2300 | 2500 | 2700 | 3000 |
| Sand load (kg) | 950 | 1250 | 1525 | 1800 | 2250 | 1100 | 1425 | 1750 | 2075 | 2325 |
| Gravel load (kg) | 350 | 475 | 575 | 700 | 775 | 425 | 550 | 700 | 825 | 925 |
| Grade 1 glass load (57011) (kg) | 673 | 893 | 1087 | 1294 | 1568 | 789 | 10022 | 1268 | 1501 | 1682 |
| Grade 2 glass load (57012) (kg) | 220 | 292 | 355 | 423 | 512 | 258 | 334 | 414 | 490 | 549 |
| Grade 2 glass load (57012) (kg) | 242 | 321 | 391 | 465 | 564 | 284 | 368 | 456 | 540 | 605 |

## BOBBIN WOUND FILTERS

### Ø 1050 mm and Ø 1200 mm Rodas filters

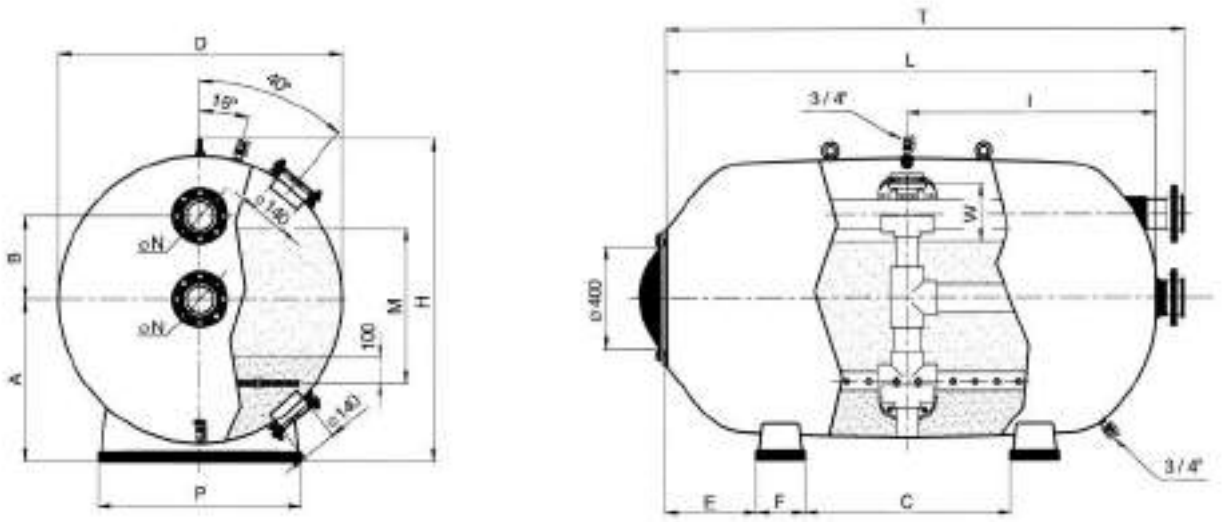


| Length (mm) | Filtration velocity m³/h/m² | Ø N (mm) | | 2,5 bar Code | 4 bar Code | Flow rate m³/h | Filtration area (m²) | Volume (l) | A (mm) | B (mm) | C (mm) | E (mm) | F (mm) | H (mm) | I (mm) | P (mm) | T (mm) | W (mm) | Total operating weight (kg) | Sand load Granulometry 1 - 1,2 mm | Sand load Granulometry 0,4 - 0,8 mm |
|---|---|---|---|---|---|---|---|---|---|---|---|---|---|---|---|---|---|---|---|---|---|
| **Diameter 1050 mm - Filter bed depth 0.6 m.** | | | | | | | | | | | | | | | | | | | | | |
| **1900** | 20 | 75 | DN65 | **05102** | **07124** | 34 | 1,72 | 1480 | 630 | 325 | 760 | 380 | 190 | 1260 | 950 | 800 | 2160 | 170 | 2530 | 350 | 950 |
| | 30 | 90 | DN80 | **05105** | **07125** | 52 | | | | | | | | | | | | | | | |
| | 40 | 110 | DN100 | **05108** | **07126** | 69 | | | | | | | | | | | | | | | |
| **2300** | 20 | 110 | DN100 | **11331** | **11321** | 42 | 2,12 | 1820 | 630 | 325 | 1000 | 460 | 190 | 1260 | 1150 | 800 | 2560 | 170 | 3100 | 475 | 1250 |
| | 30 | 125 | DN110 | **11332** | **11322** | 64 | | | | | | | | | | | | | | | |
| | 40 | 140 | DN125 | **11333** | **11323** | 85 | | | | | | | | | | | | | | | |
| **2500** | 20 | 110 | DN100 | **24842** | **25016** | 46 | 2,32 | 2000 | 630 | 325 | 1120 | 500 | 190 | 1260 | 1250 | 800 | 2760 | 170 | 3380 | 575 | 1525 |
| | 30 | 125 | DN110 | **24843** | **25017** | 70 | | | | | | | | | | | | | | | |
| | 40 | 140 | DN125 | **24844** | **25018** | 93 | | | | | | | | | | | | | | | |
| **2700** | 20 | 110 | DN100 | **11334** | **11326** | 50 | 2,51 | 2170 | 630 | 325 | 1240 | 540 | 190 | 1260 | 1350 | 800 | 2960 | 170 | 3670 | 700 | 1800 |
| | 30 | 125 | DN110 | **11335** | **11327** | 75 | | | | | | | | | | | | | | | |
| | 40 | 140 | DN125 | **11336** | **11328** | 100 | | | | | | | | | | | | | | | |
| **3000** | 20 | 110 | DN100 | **22647** | **22683** | 56 | 2,81 | 2430 | 630 | 325 | 1420 | 600 | 190 | 1260 | 1500 | 800 | 3260 | 170 | 4100 | 775 | 20250 |
| | 30 | 140 | DN125 | **22648** | **22684** | 84 | | | | | | | | | | | | | | | |
| | 40 | 160 | DN150 | **22649** | **20895** | 112 | | | | | | | | | | | | | | | |
| **Diameter 1200 mm - Filter bed depth 0.6 m.** | | | | | | | | | | | | | | | | | | | | | |
| 1900 | 20 | 75 | DN100 | **22650** | **22685** | 39 | 1,96 | 1900 | 725 | 325 | 760 | 380 | 200 | 1390 | 950 | 900 | 2130 | 225 | 3220 | 425 | 1100 |
| | 30 | 90 | DN110 | **22651** | **22686** | 59 | | | | | | | | | | | | | | | |
| | 40 | 110 | DN125 | **22652** | **22687** | 79 | | | | | | | | | | | | | | | |
| 2300 | 20 | 110 | DN100 | **22653** | **22688** | 48 | 2,42 | 2350 | 725 | 325 | 1000 | 460 | 200 | 1390 | 1150 | 900 | 2530 | 225 | 3960 | 550 | 1425 |
| | 30 | 125 | DN125 | **22654** | **22689** | 73 | | | | | | | | | | | | | | | |
| | 40 | 140 | DN150 | **22655** | **20897** | 97 | | | | | | | | | | | | | | | |
| 2500 | 20 | 110 | DN110 | **24845** | **25019** | 53 | 2,65 | 2580 | 725 | 325 | 1120 | 500 | 200 | 1390 | 1250 | 900 | 2750 | 225 | 4320 | 700 | 1750 |
| | 30 | 125 | DN125 | **24846** | **25020** | 79 | | | | | | | | | | | | | | | |
| | 40 | 140 | DN150 | **24847** | **25021** | 106 | | | | | | | | | | | | | | | |
| 2700 | 20 | 110 | DN110 | **22656** | **22690** | 57 | 2,87 | 2800 | 725 | 325 | 1240 | 540 | 200 | 1390 | 1350 | 900 | 2950 | 225 | 4690 | 825 | 2075 |
| | 30 | 125 | DN125 | **22657** | **22691** | 86 | | | | | | | | | | | | | | | |
| | 40 | 140 | DN150 | **22658** | **20898** | 115 | | | | | | | | | | | | | | | |
| 3000 | 20 | 110 | DN110 | **22659** | **22692** | 64 | 3,21 | 3140 | 725 | 325 | 1420 | 600 | 200 | 1390 | 1500 | 900 | 3250 | 225 | 5240 | 925 | 2325 |
| | 30 | 140 | DN125 | **22660** | **22693** | 96 | | | | | | | | | | | | | | | |
| | 40 | 160 | DN150 | **22661** | **20899** | 129 | | | | | | | | | | | | | | | |

**MEDIA RECOMMENDATIONS - Sand = 1.4 Kg/dm³ - Gravel = 1.5 Kg/dm³**

Filtration bed 0.8 and 1 m

# BOBBIN WOUND FILTERS



DOES NOT INCLUDE VALVE MANIFOLD

Ø 1400 mm
Ø 1600 mm
Ø 1800 mm

Optional:
Standard American sizes

## Ø 1400 mm and Ø 1600 mm Rodas filters

**General features:**
- 100% resistant to corrosion unlike conventional steel filters
- Maximum operating temperature 50º C
- Comply with European standards for pressure vessels 97/23/CE included in section 3 of article 3
- Hydraulic pressure test 1.5 times the maximum admissible pressure

**Fitted with:**
- Pressure gauge panel
- Manual air vent and water purge
- Ø 400 mm lateral manhole

**Characteristics of internal components:**
- Internal components and pipe in PVC
- PP laterals with 0.3 slots
- Bolts, nuts and washers in AISI-316
- EPDM seals and gaskets.

**Maximum pressure: 2.5 kg/cm².**

**Filters Ø 1400 mm - Filtration bed 0.8 m**

| Filter length (mm) | Filtration velocity m³/h/m² | Outlet Ø mm | Flow rate m³/h | Code | Standard Packaging | Standard Weight Kg | Standard Volume m³ |
|---|---|---|---|---|---|---|---|
| 1900 | 20 | 110 | 45 | **24848** | 1 | 340 | 4.84 |
| | 30 | 125 | 67 | **24849** | 1 | 340 | 4.84 |
| | 40 | 140 | 89 | **24850** | 1 | 340 | 4.84 |
| 2500 | 20 | 110 | 60 | **24854** | 1 | 435 | 6.23 |
| | 30 | 140 | 91 | **24855** | 1 | 435 | 6.23 |
| | 40 | 160 | 121 | **24856** | 1 | 435 | 6.23 |
| 3000 | 20 | 125 | 73 | **24860** | 1 | 530 | 7.44 |
| | 30 | 160 | 110 | **24861** | 1 | 530 | 7.44 |
| | 40 | 200 | 147 | **24862** | 1 | 530 | 7.44 |

**Filters Ø 1600 mm - Filtration bed 1 m**

| Filter length (mm) | Filtration velocity m³/h/m² | Outlet Ø mm | Flow rate m³/h | Code | Standard Packaging | Standard Weight Kg | Standard Volume m³ |
|---|---|---|---|---|---|---|---|
| 1900 | 20 | 110 | 49 | **22662** | 1 | 400 | 5.49 |
| | 30 | 140 | 74 | **22663** | 1 | 400 | 5.49 |
| | 40 | 160 | 99 | **22664** | 1 | 400 | 5.49 |
| 2500 | 20 | 140 | 67 | **24866** | 1 | 520 | 7.18 |
| | 30 | 160 | 101 | **24867** | 1 | 520 | 7.18 |
| | 40 | 200 | 134 | **24868** | 1 | 520 | 7.18 |
| 3000 | 20 | 140 | 82 | **22671** | 1 | 620 | 8.60 |
| | 30 | 160 | 123 | **22672** | 1 | 620 | 8.60 |
| | 40 | 200 | 164 | **22673** | 1 | 620 | 8.60 |

See the sand, gravel and glass loads on page 511

**Filtration bed 0.8 and 1 m**



DOES NOT INCLUDE VALVE MANIFOLD

**Ø 1400 mm**
**Ø 1600 mm**
**Ø 1800 mm**

Optional:
Standard American sizes

# BOBBIN WOUND FILTERS

## Ø 1400 mm, Ø 1600 mm and Ø 1800 mm Rodas filters

**Maximum pressure: 2.5 kg/cm².**

**Filters Ø 1800 mm - Filtration bed 1 m**

| Filter length (mm) | Filtration velocity m³/h/m² | Outlet Ø mm | Flow rate m³/h | Code | Standard Packaging | Standard Weight Kg | Standard Volume m³ |
|---|---|---|---|---|---|---|---|
| 2500 | 20 | 125 | 75 | **24875** | 1 | 585 | 10.40 |
| | 30 | 160 | 112 | **24876** | 1 | 585 | 10.40 |
| | 40 | 200 | 150 | **24877** | 1 | 585 | 10.40 |
| 3000 | 20 | 140 | 92 | **24881** | 1 | 700 | 12.25 |
| | 30 | 160 | 137 | **24882** | 1 | 700 | 12.25 |
| | 40 | 200 | 183 | **24883** | 1 | 700 | 12.25 |
| 3500 | 20 | 140 | 108 | **24887** | 1 | 875 | 14.20 |
| | 30 | 200 | 162 | **24888** | 1 | 875 | 14.20 |
| | 40 | 225 | 216 | **24889** | 1 | 875 | 14.20 |
| 4000 | 20 | 160 | 125 | **24893** | 1 | 930 | 16.00 |
| | 30 | 200 | 187 | **24894** | 1 | 930 | 16.00 |
| | 40 | 225 | 250 | **24895** | 1 | 930 | 16.00 |

**Maximum pressure: 4 kg/cm²**

**Filters Ø 1400 mm - Filtration bed 0.8 m**

| Filter length (mm) | Filtration velocity m³/h/m² | Outlet Ø mm | Flow rate m³/h | Code | Standard Packaging | Standard Weight Kg | Standard Volume m³ |
|---|---|---|---|---|---|---|---|
| 1900 | 20 | 110 | 45 | **25022** | 1 | 385 | 4.84 |
| | 30 | 125 | 67 | **25023** | 1 | 385 | 4.84 |
| | 40 | 140 | 89 | **25024** | 1 | 385 | 4.84 |
| 2500 | 20 | 110 | 60 | **25028** | 1 | 485 | 6.23 |
| | 30 | 140 | 91 | **25029** | 1 | 485 | 6.23 |
| | 40 | 160 | 121 | **25030** | 1 | 485 | 6.23 |
| 3000 | 20 | 125 | 73 | **25034** | 1 | 585 | 7.44 |
| | 30 | 160 | 110 | **25035** | 1 | 585 | 7.44 |
| | 40 | 200 | 147 | **25036** | 1 | 585 | 7.44 |

**See the sand, gravel and glass media loads on the next page**

**Filtration bed 0.8 and 1 m**



DOES NOT INCLUDE VALVE MANIFOLD

**Ø 1400 mm**
**Ø 1600 mm**
**Ø 1800 mm**

Optional:
Standard American sizes

## BOBBIN WOUND FILTERS

### Ø 1400 mm, Ø 1600 mm and Ø 1800 mm Rodas filters

**Maximum pressure: 4 kg/cm²**

**Filters Ø 1600 mm - Filtration bed 1 m**

| Filter length (mm) | Filtration velocity m³/h/m² | Outlet Ø mm | Flow rate m³/h | Code | Standard Packaging | Standard Weight Kg | Standard Volume m³ |
|---|---|---|---|---|---|---|---|
| 1900 | 20 | 110 | 49 | **22694** | 1 | 450 | 5.49 |
| | 30 | 140 | 74 | **22695** | 1 | 450 | 5.49 |
| | 40 | 160 | 99 | **20900** | 1 | 450 | 5.49 |
| 2500 | 20 | 140 | 67 | **25040** | 1 | 570 | 7.18 |
| | 30 | 160 | 101 | **25041** | 1 | 570 | 7.18 |
| | 40 | 200 | 134 | **25042** | 1 | 570 | 7.18 |
| 3000 | 20 | 140 | 82 | **22700** | 1 | 685 | 8.60 |
| | 30 | 160 | 123 | **22701** | 1 | 685 | 8.60 |
| | 40 | 200 | 164 | **20903** | 1 | 685 | 8.60 |

**Filters Ø 1800 mm - Filtration bed 1 m**

| Filter length (mm) | Filtration velocity m³/h/m² | Outlet Ø mm | Flow rate m³/h | Code | Standard Packaging | Standard Weight Kg | Standard Volume m³ |
|---|---|---|---|---|---|---|---|
| 2500 | 20 | 125 | 75 | **25049** | 1 | 680 | 10.40 |
| | 30 | 160 | 112 | **25050** | 1 | 680 | 10.40 |
| | 40 | 200 | 150 | **25051** | 1 | 680 | 10.40 |
| 3000 | 20 | 140 | 92 | **25055** | 1 | 805 | 12.25 |
| | 30 | 160 | 137 | **25056** | 1 | 805 | 12.25 |
| | 40 | 200 | 183 | **25057** | 1 | 805 | 12.25 |
| 3500 | 20 | 140 | 108 | **25061** | 1 | 930 | 14.20 |
| | 30 | 200 | 162 | **25062** | 1 | 930 | 14.20 |
| | 40 | 225 | 216 | **25063** | 1 | 930 | 14.20 |
| 4000 | 20 | 160 | 125 | **25067** | 1 | 1055 | 16.00 |
| | 30 | 200 | 187 | **25068** | 1 | 1055 | 16.00 |
| | 40 | 225 | 250 | **25069** | 1 | 1055 | 16.00 |

| | Ø 1400 filters | | | Ø 1600 filters | | | Ø 1800 filters | | | |
|---|---|---|---|---|---|---|---|---|---|---|
| **Filter length (mm)** | **1900** | **2500** | **3000** | **1900** | **2500** | **3000** | **2500** | **3000** | **3500** | **4000** |
| **Sand load (kg)** | 2100 | 2825 | 3450 | 2850 | 3875 | 4750 | 4850 | 5925 | 7000 | 8075 |
| **Gravel load (kg)** | 575 | 800 | 1000 | 600 | 850 | 1050 | 975 | 1225 | 1475 | 1700 |
| **Grade 1 glass load (57011) (kg)** | 1389 | 1882 | 2310 | 1796 | 2458 | 3018 | 3033 | 3722 | 4411 | 5087 |
| **Grade 2 glass load (57012) (kg)** | 454 | 615 | 754 | 586 | 803 | 986 | 991 | 1216 | 1441 | 1662 |
| **Grade 2 glass load (57012) (kg)** | 500 | 677 | 831 | 646 | 884 | 1085 | 1091 | 1338 | 1586 | 1830 |

## BOBBIN WOUND FILTERS

### Ø 1400 mm, Ø 1600 mm and Ø 1800 mm Rodas filters

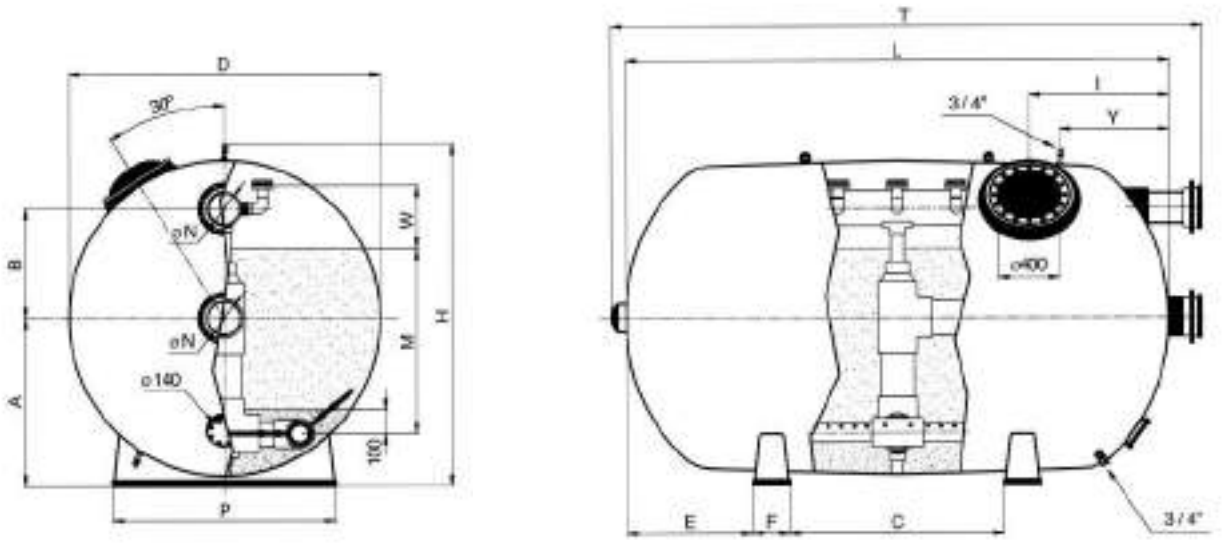


| Length (mm) | Filtration velocity m³/h/m² | Ø N (mm) | | 2,5 bar | 4 bar | Flow rate m³/h | Filtration area (m²) | Volume (l) | A (mm) | B (mm) | C (mm) | E (mm) | F (mm) | H (mm) | I (mm) | P (mm) | T (mm) | W (mm) | Y (mm) | Total operating weight (kg) | Sand load Granulometry | |
|---|---|---|---|---|---|---|---|---|---|---|---|---|---|---|---|---|---|---|---|---|---|---|
| | | | | Code | Code | | | | | | | | | | | | | | | | 1 - 1.2 mm | 0.4 - 0.8 mm |
| **Diameter 1400 mm - Filter bed depth 0.8–1.2 m.** | | | | | | | | | | | | | | | | | | | | | | |
| **1900** | 20 | 110 | DN100 | **24848** | **25022** | 45 | 2.23 | 2530 | 810 | 390 | 720 | 380 | 210 | 1600 | 820 | 1080 | 2160 | 220 | 1380 | 4250 | 575 | 2100 |
| | 30 | 125 | DN110 | **24849** | **25023** | 67 | | | | | | | | | | | | | | | | |
| | 40 | 140 | DN125 | **24850** | **25024** | 89 | | | | | | | | | | | | | | | | |
| **2500** | 20 | 110 | DN100 | **24854** | **25028** | 60 | 3.02 | 3460 | 810 | 390 | 1080 | 500 | 210 | 1600 | 820 | 1080 | 2780 | 220 | 1380 | 5740 | 800 | 2825 |
| | 30 | 140 | DN125 | **24855** | **25029** | 91 | | | | | | | | | | | | | | | | |
| | 40 | 160 | DN150 | **24856** | **25030** | 121 | | | | | | | | | | | | | | | | |
| **3000** | 20 | 125 | DN110 | **24860** | **25034** | 73 | 3.67 | 4230 | 810 | 390 | 1380 | 600 | 210 | 1600 | 820 | 1080 | 3320 | 220 | 1380 | 6990 | 1000 | 3450 |
| | 30 | 160 | DN150 | **24861** | **25035** | 110 | | | | | | | | | | | | | | | | |
| | 40 | 200 | DN175 | **24862** | **25036** | 147 | | | | | | | | | | | | | | | | |
| **Diameter 1600 mm - Filter bed depth 1–1.2 m,** | | | | | | | | | | | | | | | | | | | | | | |
| **1900** | 20 | 110 | DN100 | **22662** | **22694** | 49 | 2.47 | 3220 | 925 | 475 | 470 | 475 | 240 | 1830 | 800 | 1230 | 2220 | 250 | 1380 | 5420 | 600 | 2850 |
| | 30 | 140 | DN125 | **22663** | **22695** | 74 | | | | | | | | | | | | | | | | |
| | 40 | 160 | DN150 | **22664** | **20900** | 99 | | | | | | | | | | | | | | | | |
| **2500** | 20 | 140 | DN125 | **24866** | **25040** | 67 | 3.36 | 4430 | 925 | 475 | 1020 | 500 | 240 | 1830 | 800 | 1230 | 2820 | 250 | 1380 | 7400 | 850 | 3875 |
| | 30 | 160 | DN150 | **24867** | **25041** | 101 | | | | | | | | | | | | | | | | |
| | 40 | 200 | DN175 | **24868** | **25042** | 134 | | | | | | | | | | | | | | | | |
| **3000** | 20 | 140 | DN125 | **22671** | **22700** | 82 | 4.1 | 5430 | 925 | 475 | 1320 | 600 | 240 | 1830 | 800 | 1230 | 3360 | 250 | 1380 | 9020 | 1050 | 4750 |
| | 30 | 160 | DN150 | **22672** | **22701** | 123 | | | | | | | | | | | | | | | | |
| | 40 | 200 | DN175 | **22673** | **20903** | 164 | | | | | | | | | | | | | | | | |
| **Diameter 1800 mm - Filter bed depth 1–1.2 m,** | | | | | | | | | | | | | | | | | | | | | | |
| **2500** | 20 | 125 | DN110 | **24875** | **25049** | 75 | 3.74 | 5530 | 1040 | 550 | 1020 | 380 | 270 | 2050 | 870 | 1380 | 2820 | 350 | 1250 | 9170 | 975 | 4850 |
| | 30 | 160 | DN150 | **24876** | **25050** | 112 | | | | | | | | | | | | | | | | |
| | 40 | 200 | DN175 | **24877** | **25051** | 150 | | | | | | | | | | | | | | | | |
| **3000** | 20 | 140 | DN125 | **24881** | **25055** | 92 | 4.58 | 6800 | 1040 | 550 | 1320 | 460 | 270 | 2050 | 870 | 1380 | 3320 | 350 | 1500 | 11230 | 1225 | 5925 |
| | 30 | 160 | DN150 | **24882** | **25056** | 137 | | | | | | | | | | | | | | | | |
| | 40 | 200 | DN175 | **24883** | **25057** | 183 | | | | | | | | | | | | | | | | |
| **3500** | 20 | 140 | DN125 | **24887** | **25061** | 108 | 5.41 | 8070 | 1040 | 550 | 1620 | 500 | 270 | 2050 | 870 | 1380 | 3850 | 350 | 1750 | 13290 | 1475 | 7000 |
| | 30 | 200 | DN175 | **24888** | **25062** | 162 | | | | | | | | | | | | | | | | |
| | 40 | 225 | DN200 | **24889** | **25063** | 216 | | | | | | | | | | | | | | | | |
| **4000** | 20 | 160 | DN150 | **24893** | **25067** | 125 | 6.25 | 9340 | 1040 | 550 | 1920 | 540 | 270 | 2050 | 870 | 1380 | 4350 | 350 | 2000 | 15350 | 1700 | 8075 |
| | 30 | 200 | DN175 | **24894** | **25068** | 187 | | | | | | | | | | | | | | | | |
| | 40 | 225 | DN200 | **24895** | **25069** | 250 | | | | | | | | | | | | | | | | |

**MEDIA RECOMMENDATIONS - Sand = 1.4 Kg/dm³ - Gravel = 1.5 Kg/dm³**

Filtration bed
1 and 1.2 m

# BOBBIN WOUND FILTERS



DOES NOT INCLUDE
VALVE MANIFOLD

Ø 2000 mm
Ø 2350 mm

Optional:
Standard American sizes

## Ø 2000 mm and Ø 2350 mm Rodas filters

**General features:**
- 100% resistant to corrosion unlike conventional steel filters
- Maximum operating temperature 50º C
- Comply with European standards for pressure vessels 97/23/CE included in section 3 of article 3
- Hydraulic pressure test 1.5 times the maximum admissible pressure

**Fitted with:**
- Pressure gauge panel
- Manual air vent and water purge
- Ø 400 mm lateral manhole

**Characteristics of internal components:**
- Internal components and pipe in PVC
- PP laterals with 0.3 slots
- Bolts, nuts and washers in AISI-316
- EPDM seals and gaskets.

**Maximum pressure: 2.5 kg/cm².**

**Filters Ø 2000 mm**

| Filter length (mm) | Filtration velocity m³/h/m² | Outlet Ø mm | Flow rate m³/h | Code | Standard Packaging | Standard Weight Kg | Standard Volume m³ |
|---|---|---|---|---|---|---|---|
| 2500 | 20 | 140 | 87 | **05103** | 1 | 650 | 13.20 |
| | 30 | 160 | 130 | **05106** | 1 | 650 | 13.20 |
| | 40 | 200 | 174 | **05109** | 1 | 650 | 13.20 |
| 3000 | 20 | 140 | 106 | **24899** | 1 | 775 | 15.65 |
| | 30 | 160 | 159 | **24900** | 1 | 775 | 15.65 |
| | 40 | 200 | 212 | **24901** | 1 | 775 | 15.65 |
| 3500 | 20 | 160 | 125 | **05104** | 1 | 900 | 18.10 |
| | 30 | 200 | 187 | **05107** | 1 | 900 | 18.10 |
| | 40 | 225 | 250 | **05110** | 1 | 900 | 18.10 |
| 4000 | 20 | 160 | 144 | **24908** | 1 | 1025 | 20.55 |
| | 30 | 200 | 216 | **24909** | 1 | 1025 | 20.55 |
| | 40 | 225 | 288 | **24910** | 1 | 1025 | 20.55 |
| 4500 | 20 | 200 | 163 | **24914** | 1 | 1150 | 23.00 |
| | 30 | 225 | 245 | **24915** | 1 | 1150 | 23.00 |
| | 40 | 250 | 326 | **24916** | 1 | 1150 | 23.00 |

See the sand, gravel and glass loads on page 515

**Filtration bed 1 and 1.2 m**

# BOBBIN WOUND FILTERS



DOES NOT INCLUDE VALVE MANIFOLD

**Ø 2000 mm**
**Ø 2350 mm**

Optional:
Standard American sizes

## Ø 2000 mm and Ø 2350 mm Rodas filters

**Maximum pressure: 2.5 kg/cm².**

**Filters Ø 2350 mm**

| Filter length (mm) | Filtration velocity m³/h/m² | Outlet Ø mm | Flow rate m³/h | Code | Standard Packaging | Standard Weight Kg | Standard Volume m³ |
|---|---|---|---|---|---|---|---|
| 3000 | 20 | 160 | 119 | **24917** | 1 | 1350 | 20.25 |
| | 30 | 200 | 178 | **24918** | 1 | 1350 | 20.25 |
| | 40 | 225 | 238 | **24919** | 1 | 1350 | 20.25 |
| 3500 | 20 | 160 | 141 | **17120** | 1 | 1500 | 23.00 |
| | 30 | 200 | 212 | **16696** | 1 | 1500 | 23.00 |
| | 40 | 225 | 282 | **17121** | 1 | 1500 | 23.00 |
| 4000 | 20 | 200 | 163 | **24926** | 1 | 1650 | 25.75 |
| | 30 | 225 | 245 | **24927** | 1 | 1650 | 25.75 |
| | 40 | 250 | 327 | **24928** | 1 | 1650 | 25.75 |
| 4500 | 20 | 200 | 186 | **22674** | 1 | 1800 | 28.50 |
| | 30 | 225 | 279 | **22675** | 1 | 1800 | 28.50 |
| | 40 | 250 | 371 | **22676** | 1 | 1800 | 28.50 |
| 5000 | 20 | 200 | 208 | **24935** | 1 | 1950 | 31.25 |
| | 30 | 250 | 312 | **24936** | 1 | 1950 | 31.25 |
| | 40 | 350 | 416 | **24937** | 1 | 1950 | 31.25 |

**Maximum pressure: 4 kg/cm²**

**Filters Ø 2000 mm**

| Filter length (mm) | Filtration velocity m³/h/m² | Outlet Ø mm | Flow rate m³/h | Code | Standard Packaging | Standard Weight Kg | Standard Volume m³ |
|---|---|---|---|---|---|---|---|
| 2500 | 20 | 140 | 87 | **07127** | 1 | 795 | 13.20 |
| | 30 | 160 | 130 | **07128** | 1 | 795 | 13.20 |
| | 40 | 200 | 174 | **07129** | 1 | 795 | 13.20 |
| 3000 | 20 | 140 | 106 | **25073** | 1 | 945 | 15.65 |
| | 30 | 160 | 159 | **25074** | 1 | 945 | 15.65 |
| | 40 | 200 | 212 | **25075** | 1 | 945 | 15.65 |
| 3500 | 20 | 160 | 125 | **07130** | 1 | 1100 | 18.10 |
| | 30 | 200 | 187 | **07131** | 1 | 1100 | 18.10 |
| | 40 | 225 | 250 | **07132** | 1 | 1100 | 18.10 |
| 4000 | 20 | 160 | 144 | **25082** | 1 | 1260 | 20.55 |
| | 30 | 200 | 216 | **25083** | 1 | 1260 | 20.55 |
| | 40 | 225 | 288 | **25084** | 1 | 1260 | 20.55 |
| 4500 | 20 | 200 | 163 | **25088** | 1 | 1420 | 23.00 |
| | 30 | 225 | 245 | **25089** | 1 | 1420 | 23.00 |
| | 40 | 250 | 326 | **25090** | 1 | 1420 | 23.00 |

**See the sand, gravel and glass media loads on the next page**

Filtration bed
1 and 1.2 m



DOES NOT INCLUDE
VALVE MANIFOLD

Ø 2000 mm
Ø 2350 mm

Optional:
Standard American sizes

## BOBBIN WOUND FILTERS

### Ø 2000 mm and Ø 2350 mm Rodas filters

**Maximum pressure: 4 kg/cm²**

**Filters Ø 2350 mm**

| Filter length (mm) | Filtration velocity m³/h/m² | Outlet Ø mm | Flow rate m³/h | Code | Standard Packaging | Standard Weight Kg | Standard Volume m³ |
|---|---|---|---|---|---|---|---|
| 3000 | 20 | 160 | 119 | **25091** | 1 | 1150 | 20.25 |
| | 30 | 200 | 178 | **25092** | 1 | 1150 | 20.25 |
| | 40 | 225 | 238 | **25093** | 1 | 1150 | 20.25 |
| 3500 | 20 | 160 | 141 | **22702** | 1 | 1300 | 23.00 |
| | 30 | 200 | 212 | **22703** | 1 | 1300 | 23.00 |
| | 40 | 225 | 282 | **22704** | 1 | 1300 | 23.00 |
| 4000 | 20 | 200 | 163 | **25100** | 1 | 1450 | 25.75 |
| | 30 | 225 | 245 | **25101** | 1 | 1450 | 25.75 |
| | 40 | 250 | 327 | **25102** | 1 | 1450 | 25.75 |
| 4500 | 20 | 200 | 186 | **22705** | 1 | 1600 | 28.50 |
| | 30 | 225 | 279 | **22706** | 1 | 1600 | 28.50 |
| | 40 | 250 | 371 | **22707** | 1 | 1600 | 28.50 |
| 5000 | 20 | 200 | 208 | **25109** | 1 | 1750 | 31.25 |
| | 30 | 250 | 312 | **25110** | 1 | 1750 | 31.25 |
| | 40 | 350 | 416 | **25111** | 1 | 1750 | 31.25 |

| | Ø 2000 filters | | | | | Ø 2350 filters | | | | |
|---|---|---|---|---|---|---|---|---|---|---|
| **Filter length (mm)** | **2500** | **3000** | **3500** | **4000** | **4500** | **3000** | **3500** | **4000** | **4500** | **5000** |
| **Sand load (kg)** | 6575 | 8025 | 9475 | 10925 | 12375 | 9300 | 11050 | 12800 | 14525 | 16250 |
| **Gravel load (kg)** | 1050 | 1300 | 1550 | 1800 | 2075 | 2575 | 3125 | 3650 | 4200 | 4750 |
| **Grade 1 glass load (57011) (kg)** | 3976 | 4862 | 5748 | 6634 | 7533 | 6166 | 7359 | 8540 | 9720 | 10900 |
| **Grade 2 glass load (57012) (kg)** | 1299 | 1588 | 1877 | 2167 | 2460 | 2014 | 2404 | 2789 | 3175 | 3560 |
| **Grade 3 glass load (57013) (kg)** | 1430 | 1748 | 2067 | 2386 | 2709 | 2218 | 2647 | 3071 | 3495 | 3920 |

## BOBBIN WOUND FILTERS

### Ø 2000 mm and Ø 2350 mm Rodas filters

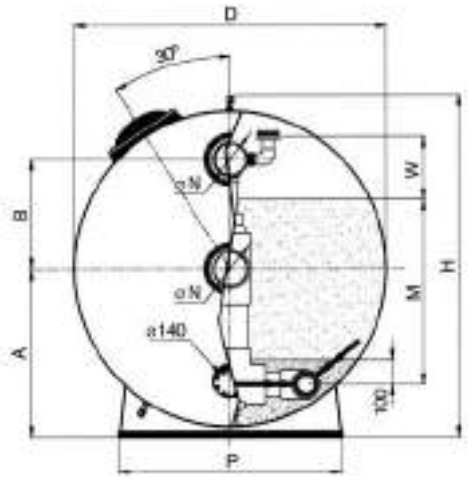


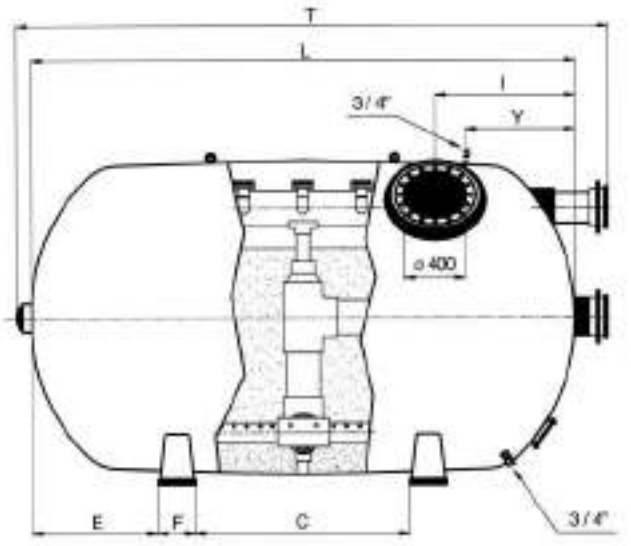


| Length (mm) | Filtration velocity m³/h/m² | Ø N (mm) | | 2.5 bar | 4 bar | Flow rate m³/h | Filtration area (m²) | Volume (l) | A (mm) | B (mm) | * C (mm) | E (mm) | F (mm) | H (mm) | I (mm) | P (mm) | T (mm) | W (mm) | Y (mm) | Total operating weight (kg) | Sand load Granulometry | |
|---|---|---|---|---|---|---|---|---|---|---|---|---|---|---|---|---|---|---|---|---|---|---|
| | | | | Code | Code | | | | | | | | | | | | | | | | 1 - 1.2 mm | 0.4 - 0.8 mm |
| **Diameter 2000 mm - Filter bed depth 1–1.2 m** | | | | | | | | | | | | | | | | | | | | | | |
| **2500** | 20 | 140 | DN125 | **05103** | **07127** | 87 | 4.34 | 6900 | 1090 | 710 | 500 | 500 | 500 | 2220 | 925 | 1470 | 2820 | 410 | 1250 | 11300 | 1050 M=1.2 m | 6575 M=1,2 m |
| | 30 | 160 | DN150 | **05106** | **07128** | 130 | | | | | | | | | | | | | | | | |
| | 40 | 200 | DN175 | **05109** | **07129** | 174 | | | | | | | | | | | | | | | | |
| **3000** | 20 | 140 | DN125 | **24899** | **25073** | 106 | 5.3 | 8470 | 1090 | 710 | 810 | 600 | 500 | 2220 | 925 | 1470 | 3320 | 410 | 1500 | 13790 | 1300 M=1,2 m | 8025 M=1,2 m |
| | 30 | 160 | DN150 | **24900** | **25074** | 159 | | | | | | | | | | | | | | | | |
| | 40 | 200 | DN175 | **24901** | **25075** | 212 | | | | | | | | | | | | | | | | |
| **3500** | 20 | 160 | DN150 | **05104** | **07130** | 125 | 6.25 | 10040 | 1090 | 710 | 1070 | 725 | 500 | 2220 | 925 | 1470 | 3850 | 410 | 1750 | 16280 | 1550 M=1.2 m | 9475 M=1,2 m |
| | 30 | 200 | DN175 | **05107** | **07131** | 187 | | | | | | | | | | | | | | | | |
| | 40 | 225 | DN200 | **05110** | **07132** | 250 | | | | | | | | | | | | | | | | |
| **4000** | 20 | 160 | DN150 | **24908** | **25082** | 144 | 7.21 | 11600 | 1090 | 710 | 650 | 600 | 500 | 2220 | 925 | 1470 | 4350 | 410 | 2000 | 18780 | 1800 M=1.2 m | 10925 M=1,2 m |
| | 30 | 200 | DN175 | **24909** | **25083** | 216 | | | | | | | | | | | | | | | | |
| | 40 | 225 | DN200 | **24910** | **25084** | 288 | | | | | | | | | | | | | | | | |
| **4500** | 20 | 200 | DN175 | **24914** | **25088** | 163 | 8.16 | 13180 | 1090 | 710 | 795 | 600 | 500 | 2220 | 925 | 1470 | 4880 | 410 | 2250 | 21380 | 2075 M=1,2 m | 12375 M=1,2 m |
| | 30 | 225 | DN200 | **24915** | **25089** | 245 | | | | | | | | | | | | | | | | |
| | 40 | 250 | DN225 | **24916** | **25090** | 326 | | | | | | | | | | | | | | | | |
| **Diameter 2350 mm - Filter bed depth 1–1.2 m** | | | | | | | | | | | | | | | | | | | | | | |
| **3000** | 20 | 160 | DN150 | **24917** | **25091** | 119 | 5.94 | 11130 | 1270 | 710 | 800 | 600 | 500 | 2560 | 925 | 1740 | 3350 | 500 | 1500 | 18300 | 2575 M=1,2 m | 9300 M=1,2 m |
| | 30 | 200 | DN175 | **24918** | **25092** | 178 | | | | | | | | | | | | | | | | |
| | 40 | 225 | DN200 | **24919** | **25093** | 238 | | | | | | | | | | | | | | | | |
| **3500** | 20 | 160 | DN150 | **17120** | **22702** | 141 | 7.06 | 13300 | 1270 | 710 | 1100 | 700 | 500 | 2560 | 925 | 1740 | 3850 | 500 | 1750 | 21790 | 3125 M=1,2 m | 11050 M=1,2 m |
| | 30 | 200 | DN175 | **16696** | **22703** | 212 | | | | | | | | | | | | | | | | |
| | 40 | 225 | DN200 | **17121** | **22704** | 282 | | | | | | | | | | | | | | | | |
| **4000** | 20 | 200 | DN175 | **24926** | **25100** | 163 | 8.17 | 15470 | 1270 | 710 | 650 | 600 | 500 | 2560 | 925 | 1740 | 4380 | 500 | 2000 | 25280 | 3650 M=1,2 m | 12800 M=1,2 m |
| | 30 | 225 | DN200 | **24927** | **25101** | 245 | | | | | | | | | | | | | | | | |
| | 40 | 250 | DN225 | **24928** | **25102** | 327 | | | | | | | | | | | | | | | | |
| **4500** | 20 | 200 | DN175 | **22674** | **22705** | 186 | 9.28 | 17640 | 1270 | 710 | 820 | 700 | 500 | 2560 | 925 | 1740 | 4880 | 500 | 2250 | 28880 | 4200 M=1,2 m | 14525 M=1,2 m |
| | 30 | 225 | DN200 | **22675** | **22706** | 279 | | | | | | | | | | | | | | | | |
| | 40 | 250 | DN225 | **22676** | **22707** | 371 | | | | | | | | | | | | | | | | |
| **5000** | 20 | 200 | DN175 | **24935** | **25109** | 208 | 10.4 | 19800 | 1270 | 710 | 600 | 600 | 500 | 2560 | 925 | 1740 | 5440 | 500 | 2500 | 32380 | 4750 M=1,2 m | 16250 M=1,2 m |
| | 30 | 250 | DN225 | **24936** | **25110** | 312 | | | | | | | | | | | | | | | | |
| | 40 | 315 | DN250 | **24937** | **25111** | 416 | | | | | | | | | | | | | | | | |

**MEDIA RECOMMENDATIONS : Hydroanthracite = 0.8 Kg/dm³ - Sand = 1.4 Kg/dm³ - Gravel = 1.5 Kg/dm³**

*With lengths (dimension L) of 4000 mm or more, an additional central support is provided.

**Filtration bed 1 and 1.2 m**



DOES NOT INCLUDE VALVE MANIFOLD

**Ø 2500 mm**

Optional: Standard American sizes

LARGE FILTERS OF MORE THAN 3000 mm WILL BE SHIPPED BY SPECIAL DELIVERY. ASK YOUR DEALER ABOUT ADDITIONAL COSTS. ABOUT ADDITIONAL COSTS.

# BOBBIN WOUND FILTERS

## Ø 2500 mm Rodas filters

**General features:**
- 100% resistant to corrosion unlike conventional steel filters
- Maximum operating temperature 50º C
- Comply with European standards for pressure vessels 97/23/CE included in section 3 of article 3
- Hydraulic pressure test 1.5 times the maximum admissible pressure

**Fitted with:**
- Pressure gauge panel
- Manual air vent and water purge
- Ø 400 mm lateral manhole

**Characteristics of internal components:**
- Internal components and pipe in PVC
- PP laterals with 0.3 slots
- Bolts, nuts and washers in AISI-316
- EPDM seals and gaskets.

**Maximum pressure: 2.5 kg/cm².** **Filters Ø 2500 mm**

| Filter length (mm) | Filtration velocity m³/h/m² | Outlet Ø mm | Flow rate m³/h | Code | Standard Packaging | Standard Weight Kg | Standard Volume m³ |
|---|---|---|---|---|---|---|---|
| 3500 | 20 | 160 | 149 | **24938** | 1 | 1285 | 28.00 |
| | 30 | 200 | 223 | **24939** | 1 | 1285 | 28.00 |
| | 40 | 225 | 297 | **24940** | 1 | 1285 | 28.00 |
| 4000 | 20 | 200 | 172 | **22677** | 1 | 1450 | 31.80 |
| | 30 | 225 | 258 | **22678** | 1 | 1450 | 31.80 |
| | 40 | 250 | 345 | **22679** | 1 | 1450 | 31.80 |
| 4500 | 20 | 200 | 196 | **24947** | 1 | 1615 | 35.55 |
| | 30 | 250 | 294 | **24948** | 1 | 1615 | 35.55 |
| | 40 | 315 | 392 | **24949** | 1 | 1615 | 35.55 |
| 5000 | 20 | 200 | 220 | **22680** | 1 | 1780 | 39.30 |
| | 30 | 250 | 329 | **22681** | 1 | 1780 | 39.30 |
| | 40 | 315 | 439 | **22682** | 1 | 1780 | 39.30 |

**Maximum pressure: 4 kg/cm²** **Filters Ø 2500 mm**

| Filter length (mm) | Filtration velocity m³/h/m² | Outlet Ø mm | Flow rate m³/h | Code | Standard Packaging | Standard Weight Kg | Standard Volume m³ |
|---|---|---|---|---|---|---|---|
| 3500 | 20 | 160 | 149 | **25112** | 1 | 1505 | 28.00 |
| | 30 | 200 | 223 | **25113** | 1 | 1505 | 28.00 |
| | 40 | 225 | 297 | **25114** | 1 | 1505 | 28.00 |
| 4000 | 20 | 200 | 172 | **22708** | 1 | 1670 | 31.80 |
| | 30 | 225 | 258 | **22709** | 1 | 1670 | 31.80 |
| | 40 | 250 | 345 | **22710** | 1 | 1670 | 31.80 |
| 4500 | 20 | 200 | 196 | **25121** | 1 | 1835 | 35.55 |
| | 30 | 250 | 294 | **25122** | 1 | 1835 | 35.55 |
| | 40 | 315 | 392 | **25123** | 1 | 1835 | 35.55 |
| 5000 | 20 | 200 | 220 | **22711** | 1 | 2000 | 39.30 |
| | 30 | 250 | 329 | **22712** | 1 | 2000 | 39.30 |
| | 40 | 315 | 439 | **22713** | 1 | 2000 | 39.30 |

## BOBBIN WOUND FILTERS

### Ø 2500 mm Rodas filters

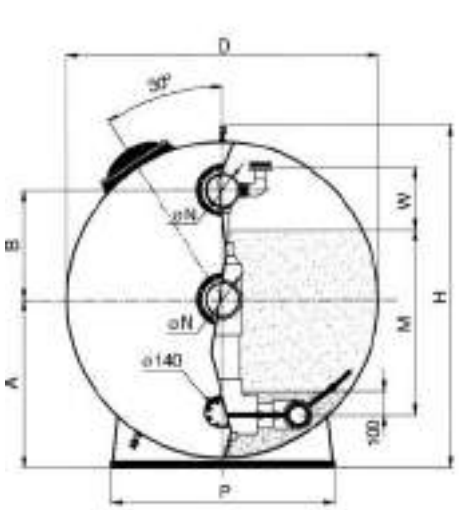


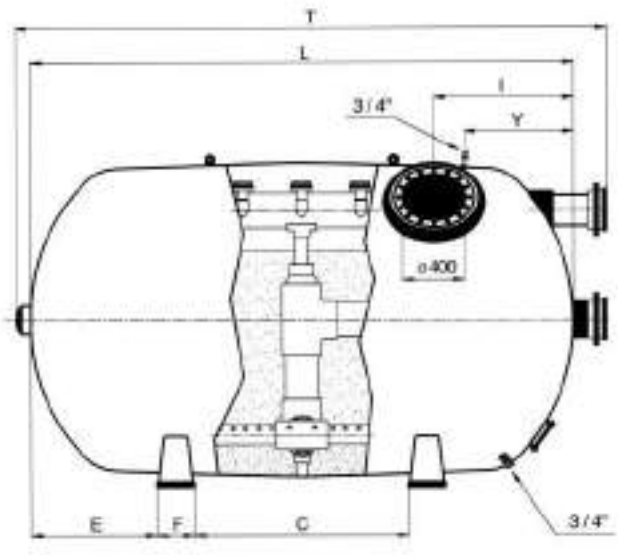


| Length (mm) | Filtering velocity (m³/h/m²) | Ø N (mm) | | 2,5 bar Code | 4 bar Code | Flow rate m³/h | Filtration area (m²) | Volume (l) | A (mm) | B (mm) | * C (mm) | E (mm) | F (mm) | H (mm) | I (mm) | P (mm) | T (mm) | W (mm) | Y (mm) | Total operating weight (kg) | Sand load Granulomety 1 - 1.2 mm | Sand load Granulomety 0.4 - 0.8 mm |
|---|---|---|---|---|---|---|---|---|---|---|---|---|---|---|---|---|---|---|---|---|---|---|
| **Diameter 2500 mm - Filter bed depth 1–1.2 m** | | | | | | | | | | | | | | | | | | | | | | |
| **3500** | 20 | 160 | DN150 | **24938** | **25112** | 149 | 7.34 | 14920 | 1360 | 710 | 960 | 770 | 500 | 2710 | 1300 | 1850 | 3850 | 500 | 1750 | 24320 | 3175 M=1,2 m | 11675 M=1,2 m |
| | 30 | 200 | DN175 | **24939** | **25113** | 223 | | | | | | | | | | | | | | | | |
| | 40 | 225 | DN200 | **24940** | **25114** | 297 | | | | | | | | | | | | | | | | |
| **4000** | 20 | 200 | DN175 | **22677** | **22708** | 172 | 8.62 | 17380 | 1360 | 710 | 500 | 750 | 500 | 2710 | 1300 | 1850 | 4380 | 500 | 2000 | 28250 | 3725 M=1,2 m | 13500 M=1,2 m |
| | 30 | 225 | DN200 | **22678** | **22709** | 258 | | | | | | | | | | | | | | | | |
| | 40 | 250 | DN225 | **22679** | **22710** | 345 | | | | | | | | | | | | | | | | |
| **4500** | 20 | 200 | DN175 | **24947** | **25121** | 196 | 9.80 | 19830 | 1360 | 710 | 750 | 750 | 500 | 2710 | 1300 | 1850 | 4940 | 500 | 2250 | 32300 | 4300 M=1,2 m | 15350 M=1.2 m |
| | 30 | 250 | DN225 | **24948** | **25122** | 294 | | | | | | | | | | | | | | | | |
| | 40 | 315 | DN250 | **24949** | **25123** | 392 | | | | | | | | | | | | | | | | |
| **5000** | 20 | 200 | DN175 | **22680** | **22711** | 220 | 10.98 | 22300 | 1360 | 710 | 500 | 750 | 500 | 2710 | 1300 | 1850 | 5440 | 500 | 2500 | 36230 | 4850 M=1,2 m | 17200 M=1,2 m |
| | 30 | 250 | DN225 | **22681** | **22712** | 329 | | | | | | | | | | | | | | | | |
| | 40 | 315 | DN250 | **22682** | **22713** | 439 | | | | | | | | | | | | | | | | |

**MEDIA RECOMMENDATIONS - SAND = 1.4 KG/DM³ - GRAVEL = 1.5 KG/DM³**

*With lengths (dimension L) of 4000 mm or more, an additional central support is provided.

| | Ø 2500 filters | | | |
|---|---|---|---|---|
| **Filter length (mm)** | **3500** | **4000** | **4500** | **5000** |
| **Sand load (kg)** | 11675 | 13500 | 15350 | 17200 |
| **Gravel load (kg)** | 3175 | 3725 | 4300 | 4850 |
| **Grade 1 glass load (57011) (kg)** | 7713 | 8945 | 10203 | 11448 |
| **Grade 2 glass load (57012) (kg)** | 2519 | 2922 | 3333 | 3739 |
| **Grade 3 glass load (57013) (kg)** | 2774 | 3217 | 3669 | 4117 |

# VALVE MANIFOLDS

## Valve manifold - Coding



**All manifolds are supplied disassembled**
(See brackets on page 522)

Manual or automatically driven valve manifolds made of PVC (PN-10) with flanges for connection to filters as per DIN-2501 standard.

PVC butterfly valves and ball valves.

Automatic valve manifolds, driven either by electric power or pneumatically, for carrying out filtration, backwashing, rinsing and shut down of the filters. Fitted with two valves without safety blocks (electric) or dual action (pneumatic), and the remaining valves with safety blocks (electric) or spring return (pneumatic), to avoid accidentally emptying a pool.



**Assembly with control box**
See page 521



A B

**A: Electric driven without safety block**
**B: Pneumatic driven spring return**

In order to facilitate sales and prices, a new code system for filter manifolds has been introduced to Catalogues. It consists in assigning a code to each model of manifold as shown in these tables. There is a total of 60 codes and subsequently, in order to determine exactly which filter is being referred to, a system of variations is used, given that the retail price does not vary.
To work out the variation the type and diameter of the filter must be identified, as the output diameters match the manifold code.
For manifolds with more than one filter please consult.

**Table showing filter type**

| | |
|---|---|
| BB | Berlin bobbin wound filter - 0.6 m filter bed (FB) |
| BS | Praga bobbin wound filter |
| BA | Oslo bobbin wound filter |
| OL | Olot bobbin wound filter 1.2 m and 1.5 m filter bed |
| AM | Ampuria bobbin wound filter 1.2 m and 1.5 m filter bed |
| HZ | Rodas bobbin wound filter |
| EU | Europa laminated filter |
| VP | Vesubio laminated filter - 0.6 m filter bed |
| VI | Vic bobbin wound filter |
| VO | Vesubio laminated filter - 1 m filter bed |

**Table showing filter diameter**

| | |
|---|---|
| 10 | 1050 |
| 12 | 1200 |
| 14 | 1400 |
| 16 | 1600 |
| 18 | 1800 |
| 20 | 2000 |
| 23 | 2350 |
| 25 | 2500 |
| 26 | 2600 |
| 28 | 2800 |
| 30 | 3000 |

| **Examples:** | **Code** | **Var.** | **Mod.** |
|---|---|---|---|
| Manual manifold 4 Val. for Praga filter D.2000-140 | 1.- **00767** | BS | 20 |
| Electric manifold 5 Val. for Praga filter D.1800-125 | 2.- **00785E** | BS | 18 |
| Manual manifold 5 Val. for Olot filter D.1200-125 | 3.- **00785** | OL | 12 |
| Pneumatic manifold 5 Val. for Vic filter D.2350-160 | 4.- **09177N** | VI | 23 |

## VALVE MANIFOLDS

Optional features for manual manifolds: Standard American sizes

### Valve manifold for one filter

| Ø | Code | Description |
|---|---|---|
| | **Manual manifolds - 4-way valve** | |
| 63 | 00747 | 4-WAY VALVE MANUAL MANIFOLD D. 63 |
| 75 | 00749 | 4-WAY VALVE MANUAL MANIFOLD D. 75 |
| 90 | 00754 | 4-WAY VALVE MANUAL MANIFOLD D. 90 |
| 110 | 00758 | 4-WAY VALVE MANUAL MANIFOLD D.110 |
| 125 | 00763 | 4-WAY VALVE MANUAL MANIFOLD D.125 |
| 140 | 00767 | 4-WAY VALVE MANUAL MANIFOLD D.140 |
| 160 | 09205 | 4-WAY VALVE MANUAL MANIFOLD D.160 |
| 200 | 09160 | 4-WAY VALVE MANUAL MANIFOLD D.200 |
| 225 | 09164 | 4-WAY VALVE MANUAL MANIFOLD D.225 |
| 250 | 26244 | 4-WAY VALVE MANUAL MANIFOLD D.250 |
| | **Electric manifolds - 4-way valve** | |
| 63 | 00747E | 4-WAY VALVE ELECTRIC MANIFOLD D. 63 |
| 75 | 00749E | 4-WAY VALVE ELECTRIC MANIFOLD D. 75 |
| 90 | 00754E | 4-WAY VALVE ELECTRIC MANIFOLD D. 90 |
| 110 | 00758E | 4-WAY VALVE ELECTRIC MANIFOLD D.110 |
| 125 | 00763E | 4-WAY VALVE ELECTRIC MANIFOLD D.125 |
| 140 | 00767E | 4-WAY VALVE ELECTRIC MANIFOLD D.140 |
| 160 | 09205E | 4-WAY VALVE ELECTRIC MANIFOLD D.160 |
| 200 | 09160E | 4-WAY VALVE ELECTRIC MANIFOLD D.200 |
| 225 | 09164E | 4-WAY VALVE ELECTRIC MANIFOLD D.225 |
| 250 | 26244E | 4-WAY VALVE ELECTRIC MANIFOLD D.250 |
| | **Pneumatic manifolds - 4-way valve** | |
| 63 | 00747N | 4-WAY VALVE PNEUMATIC MANIFOLD D. 63 |
| 75 | 00749N | 4-WAY VALVE PNEUMATIC MANIFOLD D. 75 |
| 90 | 00754N | 4-WAY VALVE PNEUMATIC MANIFOLD D. 90 |
| 110 | 00758N | 4-WAY VALVE PNEUMATIC MANIFOLD D.110 |
| 125 | 00763N | 4-WAY VALVE PNEUMATIC MANIFOLD D.125 |
| 140 | 00767N | 4-WAY VALVE PNEUMATIC MANIFOLD D.140 |
| 160 | 09205N | 4-WAY VALVE PNEUMATIC MANIFOLD D.160 |
| 200 | 09160N | 4-WAY VALVE PNEUMATIC MANIFOLD D.200 |
| 225 | 09164N | 4-WAY VALVE PNEUMATIC MANIFOLD D.225 |
| 250 | 26244N | 4-WAY VALVE PNEUMATIC MANIFOLD D.250 |

| Ø | Code | Description |
|---|---|---|
| | **Manual manifolds - 5-way valve** | |
| 63 | 00769 | 5-WAY VALVE MANUAL MANIFOLD D. 63 |
| 75 | 00771 | 5-WAY VALVE MANUAL MANIFOLD D. 75 |
| 90 | 00776 | 5-WAY VALVE MANUAL MANIFOLD D. 90 |
| 110 | 00780 | 5-WAY VALVE MANUAL MANIFOLD D.110 |
| 125 | 00785 | 5-WAY VALVE MANUAL MANIFOLD D.125 |
| 140 | 00789 | 5-WAY VALVE MANUAL MANIFOLD D.140 |
| 160 | 09177 | 5-WAY VALVE MANUAL MANIFOLD D.160 |
| 200 | 09180 | 5-WAY VALVE MANUAL MANIFOLD D.200 |
| 225 | 09185 | 5-WAY VALVE MANUAL MANIFOLD D.225 |
| 250 | 19133 | 5-WAY VALVE MANUAL MANIFOLD D.250 |
| | **Electric manifolds - 5-way valve** | |
| 63 | 00769E | 5-WAY VALVE ELECTRIC MANIFOLD D. 63 |
| 75 | 00771E | 5-WAY VALVE ELECTRIC MANIFOLD D. 75 |
| 90 | 00776E | 5-WAY VALVE ELECTRIC MANIFOLD D. 90 |
| 110 | 00780E | 5-WAY VALVE ELECTRIC MANIFOLD D.110 |
| 125 | 00785E | 5-WAY VALVE ELECTRIC MANIFOLD D.125 |
| 140 | 00789E | 5-WAY VALVE ELECTRIC MANIFOLD D.140 |
| 160 | 09177E | 5-WAY VALVE ELECTRIC MANIFOLD D.160 |
| 200 | 09180E | 5-WAY VALVE ELECTRIC MANIFOLD D.200 |
| 225 | 09185E | 5-WAY VALVE ELECTRIC MANIFOLD D.225 |
| 250 | 19133E | 5-WAY VALVE ELECTRIC MANIFOLD D.250 |
| | **Pneumatic manifolds - 5-way valve** | |
| 63 | 00769N | 5-WAY VALVE PNEUMATIC MANIFOLD D. 63 |
| 75 | 00771N | 5-WAY VALVE PNEUMATIC MANIFOLD D. 75 |
| 90 | 00776N | 5-WAY VALVE PNEUMATIC MANIFOLD D. 90 |
| 110 | 00780N | 5-WAY VALVE PNEUMATIC MANIFOLD D.110 |
| 125 | 00785N | 5-WAY VALVE PNEUMATIC MANIFOLD D.125 |
| 140 | 00789N | 5-WAY VALVE PNEUMATIC MANIFOLD D.140 |
| 160 | 09177N | 5-WAY VALVE PNEUMATIC MANIFOLD D.160 |
| 200 | 09180N | 5-WAY VALVE PNEUMATIC MANIFOLD D.200 |
| 225 | 09185N | 5-WAY VALVE PNEUMATIC MANIFOLD D.225 |
| 250 | 19133N | 5-WAY VALVE PNEUMATIC MANIFOLD D.250 |

+ info
Further information on **PRODUCTS**
**www.astralpool.com**

# CONTROL BOXES



## Control panel for valve manifolds

Control panel for electrically or pneumatically actuated manifolds of 4 or 5 valves. For automatic filtration, backwashing, rinsing and shut-down operations. Fitted with automatic programming installation that enables the execution of all the required operations and can be personalized to suit your requirements. Quick and easy installation with numbered terminal connection strip. Voltage 230 V single phase. Does not include valve manifold.

| | Code | Standard Pack | Standard Weight in kg | Standard Volume in $m^3$ |
|---|---|---|---|---|
| **For 4 valves** | | | | |
| 2 valves without block, 2 valves with block. Electric actuator | **41005** | 1 | 6 | 0.04 |
| 2 valves double acting, 2 valves spring return. Pneumatic actuator | **41009** | 1 | 6 | 0.04 |
| **For 5 valves** | | | | |
| 2 valves without block, 3 valves with block. Electric actuator | **41007** | 1 | 6 | 0.04 |
| 2 valves double acting, 3 valves spring return. Pneumatic actuator | **41011** | 1 | 6 | 0.04 |



Distance between PVC valve manifold supports

| Ø mm | RATED PRESSURE | | | |
|---|---|---|---|---|
| | 0.4 MPa | 0.6 MPa | 1.0 MPa | 1.6 MPa |
| **10** | - | - | - | 0.3 |
| **12** | - | - | - | 0.3 |
| **16** | - | - | - | 0.3 |
| **20** | - | - | - | 0.4 |
| **25** | - | - | 0.5 | 0.5 |
| **32** | - | - | 0.6 | 0.6 |
| **40** | - | 0.8 | 0.8 | 0.8 |
| **50** | - | 0.9 | 0.9 | 0.9 |
| **63** | 1.0 | 1.0 | 1.0 | 1.0 |
| **75** | 1.0 | 1.0 | 1.2 | 1.2 |
| **90** | 1.0 | 1.2 | 1.3 | 1.4 |
| **110** | 1.2 | 1.3 | 1.5 | 1.7 |
| **125** | 1.3 | 1.5 | 1.7 | 1.9 |
| **140** | 1.3 | 1.6 | 1.8 | 2.0 |
| **160** | 1.5 | 1.7 | 2.0 | 2.2 |
| **180** | 1.6 | 1.8 | 2.1 | 2.4 |
| **200** | 1.7 | 1.9 | 2.3 | 2.6 |
| **225** | 1.8 | 2.1 | 2.5 | 2.9 |
| **250** | 1.8 | 2.2 | 2.6 | 3.0 |
| **280** | 2.0 | 2.3 | 2.8 | 3.2 |
| **315** | 2.1 | 2.5 | 3.0 | 3.5 |
| **355** | 2.2 | 2.7 | 3.2 | 3.8 |
| **400** | 2.4 | 2.8 | 3.4 | 4.0 |
| **450** | 2.5 | 3.0 | 3.7 | 4.3 |
| **500** | 2.7 | 3.2 | 3.9 | 4.6 |

Overhead PVC pressure pipes should be mounted on supports. The distance between them should be as shown in the table.
Distance between supports in m (according to UNE 53.399).

These distances are based on a maximum temperature of 20 ºC.
In the case of higher temperatures, the values shown should be multiplied by the following reduction coefficients:

- Between 20 and 30 ºC, coefficient of 0.9

- Between 35 and 45 ºC, coefficient of 0.85

In vertical installations, the distance between supports may be as shown in the table multiplied by 1.3.

Factory programmed automation as follows

| | Actuator types | |
|---|---|---|
| | **Electric** | **Pneumatic** |
| **For 4 valves** | 2 valves without block | 2 double acting valves |
| | 2 valves with block | 2 spring return valves |
| | Program A | Program C |
| | Code 41005 | Code 41009 |
| | 4 valves without block | 4 valves without block |
| | Program A | Program A |
| | Code 41006 | Code 41010 |
| **For 5 valves** | 2 valves without block | 2 double acting valves |
| | 3 valves with block | 4 spring return valves |
| | Program B | Program D |
| | Code 41007 | Code 41011 |
| | 5 valves without block | 5 double acting valves |
| | Program B | Program B |
| | Code 41008 | Code 41012 |

+ info
Further information on **PRODUCTS**
**www.astralpool.com**

# SUPPORTS FOR VALVE MANIFOLDS



## Valve manifold brackets

Easy assembly valve manifold brackets from Ø 63 mm for all filter types. Totally adjustable in height, consisting of vertical support pipes in zinc-plated steel, together with box of accessories.

| | Code | Standard Pack | Standard Weight in kg | Standard Volume in m³ |
|---|---|---|---|---|
| **Zinc-plated steel** | | | | |
| Height 1.85 m | **28690** | 1 | 3.8 | - |
| Height 2.30 m | **28691** | 1 | 4.5 | - |
| Height 3.0 m | **28692** | 1 | 5.9 | - |
| **Box of accessories consisting of:** | | | | |
| **2 support brackets with anti-vibration clamps,** | | | | |
| and fixing bolts and accessories | | | | |
| For Ø 63 mm pipe | **42598** | 1 | 1.5 | 0.011 |
| For Ø 75 mm pipe | **28693** | 1 | 1.5 | 0.011 |
| For Ø 90 mm pipe | **28694** | 1 | 1.5 | 0.011 |
| For Ø 110 mm pipe | **28695** | 1 | 1.5 | 0.011 |
| For Ø 125 mm pipe | **28696** | 1 | 1.5 | 0.011 |
| For Ø 140 mm pipe | **28697** | 1 | 1.5 | 0.011 |
| For Ø 160 mm pipe | **28698** | 1 | 2.5 | 0.011 |
| For Ø 200 mm pipe | **28699** | 1 | 2.5 | 0.011 |
| For Ø 225 mm pipe | **28700** | 1 | 2.5 | 0.011 |
| **Accessory box for additional supports:** | | | | |
| Fixing plug and protection cap | **28701** | 1 | - | - |



## Wall brackets for valve manifold

For all filter type from Ø 63 mm pipe onwards. Consisting in zinc- plated steel support bracket with anti-vibration clamp and fixing screws. Supply: 1 vertical support with manifold bracket.

| | Code | Standard Pack | Standard Weight in kg | Standard Volume in m³ |
|---|---|---|---|---|
| For Ø 63 mm pipe | **35585** | 1 | 1.0 | 0.007 |
| For Ø 75 mm pipe | **00855** | 1 | 1.2 | 0.007 |
| For Ø 90 mm pipe | **00856** | 1 | 1.3 | 0.007 |
| For Ø 110 mm pipe | **00857** | 1 | 1.4 | 0.007 |
| For Ø 125 mm pipe | **00858** | 1 | 1.4 | 0.007 |
| For Ø 140 mm pipe | **00859** | 1 | 1.5 | 0.007 |
| For Ø 160 mm pipe | **00860** | 1 | 1.6 | 0.007 |
| For Ø 200 mm pipe | **00861** | 1 | 1.7 | 0.007 |
| For Ø 225 mm pipe | **00862** | 1 | 1.7 | 0.007 |
| For Ø 250 mm pipe | **36120** | 1 | 2.0 | 0.011 |
| For Ø 315 mm pipe | **36602** | 1 | 2.4 | 0.011 |

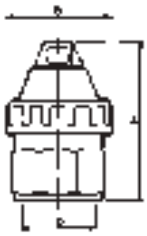







## Air vents

| | Code | Standard Pack | Standard Weight in kg | Standard Volume in m³ |
|---|---|---|---|---|
| **Standard Air vent** | | | | |
| In cast Aluminium painted | | | | |
| yellow. Inner ball in PVC | | | | |
| Ø 1" | **04143** | 12 | 2.3 | 0.009 |
| Ø 1 1/2" | **04144** | 12 | 4.0 | 0.009 |
| Ø 2" | **04145** | 12 | 4.5 | 0.018 |
| **Double effect air vent** | | | | |
| Body in PP and fibreglass. Maximum pressure 16 Kg/cm² | | | | |
| Seal in nitrile rubber. | | | | |
| Ø 1" | **49381** | 1 | 0.3 | 0.001 |
| Ø 2" U-bend outlet with PVC elbow | **49382** | 1 | 0.7 | 0.001 |

| Code | D | A (mm) | B (mm) |
|---|---|---|---|
| **04143** | 1" | 74 | 44 |
| **04144** | 1 1/2" | 105 | 69 |
| **04145** | 2" | 105 | 69 |

# FILTRATION MEDIA & ACCESSORIES



## OC-1 filtration medium

**OC-1 filtration load: The future of pool filtration**

OC refers to Open Cell and OC-1 is a mechanical filter that uses open-cell filtration technology to filter water with a high quality, increasing the water saving and energy potential. The filtration media is an extruded plastic compound comprising a base of High Density Polyethylene with Calcium Carbonate

- Saves water: exclusive filtration method that reduces water consumption by more than 40%
- Saves power: lets you use a smaller pump or lower the power to get the same flow you would with traditional filtration media.
- Saves time: OC-1 reduces backwash frequency to less than a third of traditional methods, meaning more leisure time for you.
- The OC-1 media has been tested in accordance with current European standard EN16713-1.

| | Code | Standard Pack | Standard Weight in kg | Standard Volume in $m^3$ |
|---|---|---|---|---|
| OC-1 50L filtration media bag | **69752** | 1 | 9.0 | 0.05 |
| OC-1 20L filtration media bag | **69753** | 1 | 3.6 | 0.02 |



## Active Clear Glass

AstralPool launches the new activated glass filter media Active Clear Glass.

The new product has the following benefits:

- More efficient and environmentally friendly filtration.
- Greater filtration capacity.
- Water and energy savings.
- Cleaner filter bed as bacteria does not remain trapped and fewer chemical products are needed.

| | Code | Standard Pack | Standard Weight in kg | Standard Volume in $m^3$ |
|---|---|---|---|---|
| **Granulomety** | | | | |
| 0.5 mm - 1.0 mm | **57011** | 1 | 25.0 | 0.667 |
| 1.0 mm - 3.0 mm | **57012** | 1 | 25.0 | 0.667 |
| 3.0 mm - 7.0 mm | **57013** | 1 | 25.0 | 0.667 |

| | | | % Volume of the filter bed | |
|---|---|---|---|---|
| | **Code** | **Range** | **Filters D < 900 mm** | **Filters D > 900 mm** |
| **Range 1** | **57011** | 0.5 - 1.0 mm | 0.8 | 0.6 |
| **Range 2** | **57012** | 1.0 - 3.0 mm | 0 | 0.2 |
| **Range 3** | **57013** | 3,0 - 7,0 mm | 0.2 | 0.2 |



## Silex

Please ask for a quotation for other grades. 25 Kg bag.

| | Code | Standard Pack | Standard Weight in kg | Standard Volume in $m^3$ |
|---|---|---|---|---|
| Granulometry 0.4 - 0.8 mm | **00596** | 1 | 25 | 0.667 |

+ info PDB
Further information on **PRODUCTS**
**www.astralpool.com**

# FILTRATION MEDIA & ACCESSORIES

## Gravel

Please ask for a quotation for other grades. 25 Kg bag.

| | Code | Standard Pack | Standard Weight in kg | Standard Volume in $m^3$ |
|---|---|---|---|---|
| Granulometry 1 - 2 mm | **10697** | 1 | 25 | 0.667 |
| Granulometry 3 - 5 mm | **11346** | 1 | 25 | 0.667 |

## Anthracite

Please ask for a quotation for other grades. 50 Kg bag.

| | Code | Standard Pack | Standard Weight in kg | Standard Volume in $m^3$ |
|---|---|---|---|---|
| Granulometry 0.8 - 1.6 mm | **03696** | 1 | 50 | 0.8 |



## Zeolite

Natural porous material that has higher filtration qualities than the normal substrate. It can be compared to that of diatomaceous earth but at a lower price and lasting much longer. Bags 30 Kg.

| | Code | Standard Pack | Standard Weight in kg | Standard Volume in $m^3$ |
|---|---|---|---|---|
| Zeolite standard 0.5 - 1 mm | **25845** | 1 | - | - |
| Zeolite standard 1-2 mm | **25846** | 1 | 30 | 0.023 |
| Zeolite standard 2-5 mm | **25847** | 1 | 30 | 0.023 |



## Gauge panel unit

Including air vents.

| | Code | Standard Pack | Standard Weight in kg | Standard Volume in $m^3$ |
|---|---|---|---|---|
| With pressure gauges 3 $kg/cm^2$ | **00729** | 1 | 1 | 0.007 |
| With pressure gauges 6 $kg/cm^2$ | **00730** | 1 | 1 | 0.007 |



# COMMERCIAL POOLS
# PUMPS


526 • Self-priming pumps
527 • Centrifugal pumps
534 • Strainers
536 • Valves and hoses

Optional:
60 Hz pumps (code XXXX-0810).

# SELF-PRIMING PUMPS



## Kivu Pump

High performance plastic self-priming pump for high flow rates (1500 rpm).
- 3 power modes: 3 HP, 4 HP and 5.5 HP.
- Low sound level: as low as 59 dBA.
- Hydraulic efficiency without prefilter 78% (as per ISO 9906 standard).
- High quality mechanical seal for salt water.
- IEC high efficiency motors (IE3).
- Standard motor shaft (compatibility with any pump manufacturer).
- Product with GS marking.
- Pump comes with pre-filter (in 2 packages: pump + prefilter).

| | Code | Standard Pack | Standard Weight in kg | Standard Volume in m³ |
|---|---|---|---|---|
| Kivu 3 HP 230/400V 50Hz + prefilter | **66047** | 1 | 56.4 | 0.35 |
| Kivu 3 HP 400/690V 50Hz + prefilter | **63042** | 1 | 56.4 | 0.35 |
| Kivu 4 HP 230/400V 50Hz + prefilter | **66048** | 1 | 59.4 | 0.35 |
| Kivu 4 HP 400/690V 50Hz + prefilter | **63043** | 1 | 59.4 | 0.35 |
| Kivu 5.5 HP 230/400V 50Hz + prefilter | **66049** | 1 | 66.4 | 0.35 |
| Kivu 5.5 HP 400/690V 50Hz + prefilter | **63044** | 1 | 66.4 | 0.35 |

*AstralPool Toolbox app for IOS and Android*

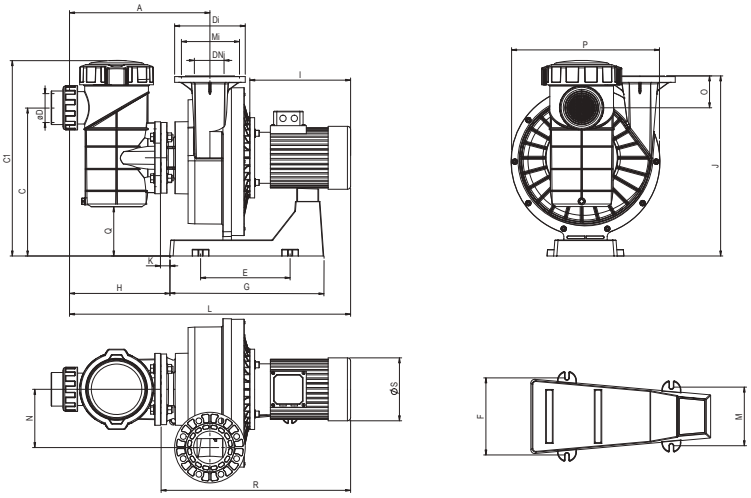


| Code | Power | A | D | DI | DNi | C | C1 | E | F | G | H | I | J | K | L | M | N | O | P | Q | R | Ma | Mi |
|---|---|---|---|---|---|---|---|---|---|---|---|---|---|---|---|---|---|---|---|---|---|---|---|
| | HP | mm | | | | | | | | | | | | | | | | | | | | | |
| **63042 66047** | 3 | 440 | 90 | 220 | 100 - 4" | 462 | 610 | 279 | 206 | 480 | 313 | 320 | 561 | 29,5 | 882 | 157 | 181.5 | 100 | 460 | 154 | 590 | - | 180 |
| **63043 66048** | 4 | 440 | 90 | 220 | 100 - 4" | 462 | 610 | 279 | 206 | 480 | 313 | 320 | 561 | 29,5 | 882 | 157 | 181.5 | 100 | 460 | 154 | 590 | - | 180 |
| **63044 66049** | 5,5 | 440 | 90 | 220 | 100 - 4" | 462 | 610 | 279 | 206 | 480 | 313 | 345 | 561 | 156 | 906 | 157 | 181.5 | 100 | 460 | 154 | 621 | - | 180 |

**Graph showing performance of pumps without prefilter**

**Pressure/Flow rate**

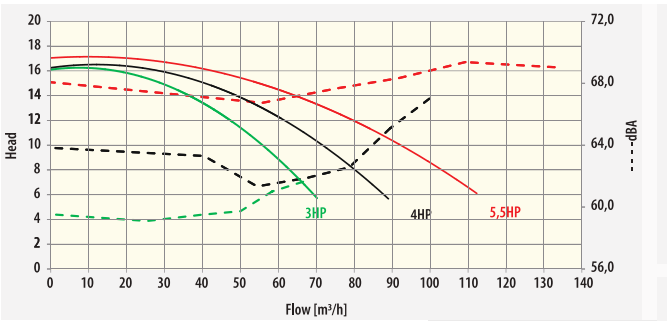


**Power/Flow rate**

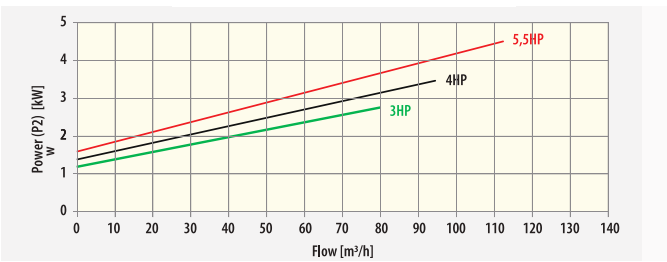

Optional:
60 Hz pumps (code XXXX-0810).

# CENTRIFUGAL PUMPS



Kivu Pump



Kiva pump
Side view

IE3

TOOL BOX

*AstralPool Toolbox app for IOS and Android*

## Kivu Pump

High performance plastic centrifugal pump for public pools that works at 1500 rpm.
- 3 power modes: 7.5 HP, 10 HP and 15 HP.
- Low sound level: as low as 66 dBA.
- Hydraulic efficiency without prefilter 85% (9906 ISO standard).
- High quality mechanical seal for salt water.
- IEC high efficiency motors (IE3).
- Standard motor shaft (compatibility with any pump manufacturer).
- Product with GS marking.
- Pump comes with pre-filter (in 2 packages: pump + prefilter).

| | Code | Standard Pack | Standard Weight in kg | Standard Volume in $m^3$ |
|---|---|---|---|---|
| Kivu 7.5 HP 230/400 V 50Hz + prefilter | **56633** | 1 | 107.4 | 0.43 |
| Kivu 7.5 HP 400/690 V 50Hz + prefilter | **56634** | 1 | 107.4 | 0.43 |
| Kivu 10 HP 230/400 V 50Hz + prefilter | **56635** | 1 | 117.9 | 0.45 |
| Kivu 10 HP 400/690 V 50Hz + prefilter | **56637** | 1 | 117.9 | 0.45 |
| Kivu 15 HP 230/400 V 50Hz + prefilter | **56638** | 1 | 151.2 | 0.49 |
| Kivu 15 HP 400/690 V 50Hz + prefilter | **56639** | 1 | 151.2 | 0.49 |

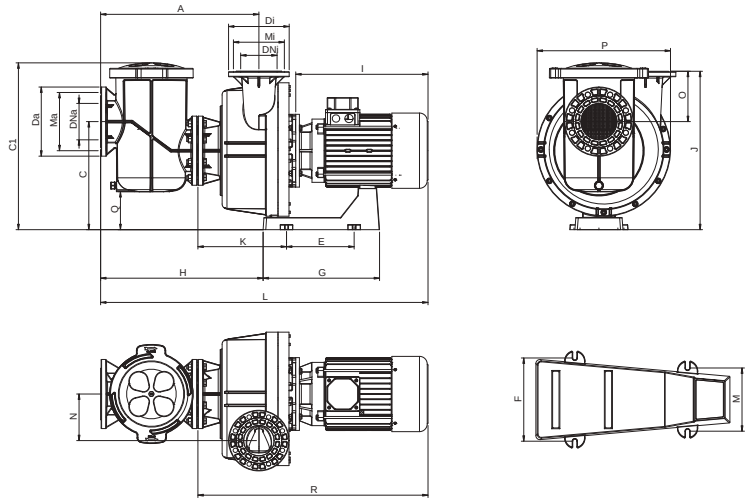


| Code | Power | A | DA | DI | DNA | DNi | C | C1 | E | F | G | H | I | J | K | L | M | N | O | P | Q | R | Ma | Mi |
|---|---|---|---|---|---|---|---|---|---|---|---|---|---|---|---|---|---|---|---|---|---|---|---|---|
| | HP | mm | | | | | | | | | | | | | | | | | | | | | | |
| **56633 56634** | 7.5 | 653 | 285 | 250 | 150 - 6" | 125 - 5" | 446 | 688 | 279 | 206 | 290 | 540 | 410 | 653 | 141 | 1215 | 157 | 192 | 208 | 550 | 157 | 815 | 240 | 210 |
| **56635 56637** | 10 | 653 | 285 | 250 | 150 - 6" | 125 - 5" | 446 | 688 | 279 | 206 | 290 | 540 | 445 | 653 | 141 | 1250 | 157 | 192 | 208 | 550 | 157 | 850 | 240 | 210 |
| **56638 56639** | 15 | 653 | 285 | 250 | 150 - 6" | 125 - 5" | 446 | 688 | 279 | 206 | 290 | 670 | 510 | 653 | 271 | 1315 | 157 | 192 | 208 | 550 | 157 | 915 | 240 | 210 |

**Graph showing performance of pumps without refilter**

**Pressure/Flow rate**

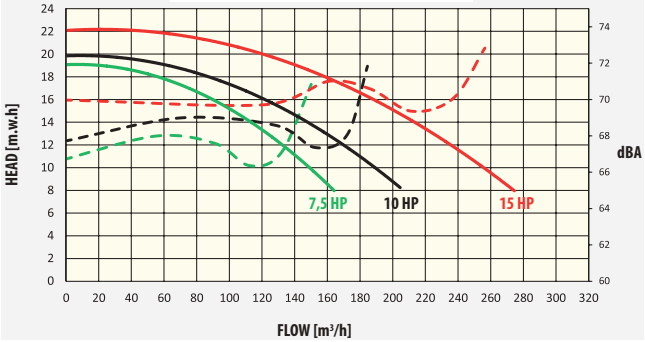


**Power/Flow rate**

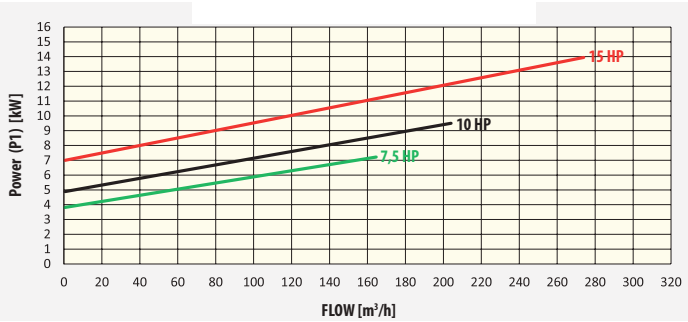

Possibility of placing orders with the following variations:
- bronze turbine
- stainless steel turbine (AISI 316-L).
- Viton mechanical seals.

# CENTRIFUGAL PUMPS

## Colorado pump with prefilter



3000 rpm plastic centrifugal electric pumps with prefilter for pools, perfect for large, low-pressure flow rates. Prefilter with transparent lid and wishbone closure; easy access. Pump bodies and prefilter manufactured in fibreglass-reinforced polypropylene. Plastic turbine. Pump shaft and prefilter basket in stainless steel. IE2 motors with 3000 rpm IP-55 protection at 230/400 V or 400/690 V and 50 Hz. From 4 HP to 12.5 HP.

IE3 version: **The same** codes with suffix -320

| | Code | Standard Pack | Standard Weight in kg | Standard Volume in m³ |
|---|---|---|---|---|
| 4 HP. 230/400 V | **44706-120** | 1 | 56 | 0.252 |
| 5.5 HP. 230/400 V | **44707-120** | 1 | 56 | 0.252 |
| 7.5 HP. 230/400 V | **44708-120** | 1 | 57 | 0.252 |
| 7.5 HP. 400/690 V | **44709-120** | 1 | 57 | 0.252 |
| 10 HP. 230/400 V | **44710-120** | 1 | 68 | 0.252 |
| 10 HP. 400/690 V | **44711-120** | 1 | 68 | 0.252 |
| 12.5 HP, 230/400 V | **44712-120** | 1 | 72 | 0.252 |
| 12.5 HP, 400/690 V | **44713-120** | 1 | 72 | 0.252 |

| Code | VOLTAGE (V) | POWER | | DIMENSIONS (mm) | | | | | | | | |
|---|---|---|---|---|---|---|---|---|---|---|---|---|
| | | kW | HP | A | B | ØC | D | E | F | G | H | L |
| **44706-120** | 230/400 | 2.9 | 4 | 375 | 255 | 90 | 405 | 470 | 330 | 200 | 535 | 820 |
| **44707-120** | 230/400 | 4 | 5.5 | 375 | 255 | 110 | 405 | 470 | 330 | 200 | 535 | 840 |
| **44708-120** | 230/400 | 5.5 | 7.5 | 375 | 255 | 110 | 405 | 470 | 330 | 200 | 535 | 840 |
| **44709-120** | 400/690 | | | | | | | | | | | |
| **44710-120** | 230/400 | 7.4 | 10 | 375 | 255 | 110 | 405 | 470 | 330 | 200 | 535 | 910 |
| **44711-120** | 400/690 | | | | | | | | | | | |
| **44712-120** | 230/400 | 9.2 | 12.5 | 375 | 255 | 110 | 405 | 470 | 330 | 200 | 535 | 955 |
| **44713-120** | 400/690 | | | | | | | | | | | |

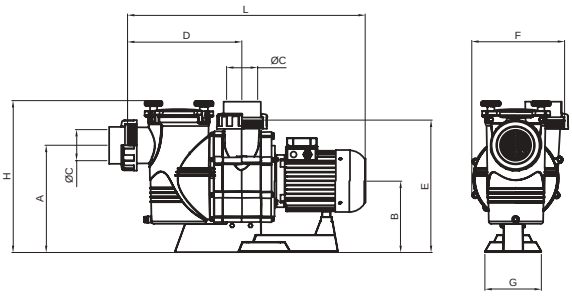


## Colorado pump without prefilter



3000 rpm plastic centrifugal electric pumps with no prefilter for pools, perfect for large, low-pressure flow rates. Pump bodies manufactured in fibreglass-reinforced polypropylene. Plastic turbine. Stainless steel pump shaft. IE2 motors with 3000 rpm IP-55 protection at 230/400 V or 400/690 V and 50Hz. From 7.5 HP to 12.5 HP.

IE3 version: The same codes with suffix -320

| | Code | Standard Pack | Standard Weight in kg | Standard Volume in m³ |
|---|---|---|---|---|
| 4 HP. 230/400 V | **44714-120** | 1 | 39 | 0.166 |
| 4 HP. 230/400 V | **44715-120** | 1 | 44 | 0.166 |
| 7.5 HP. 230/400 V | **44716-120** | 1 | 50 | 0.166 |
| 7.5 HP. 400/690 V | **44717-120** | 1 | 50 | 0.166 |
| 10 HP. 230/400 V | **44718-120** | 1 | 61 | 0.166 |
| 10 HP. 400/690 V | **44719-120** | 1 | 61 | 0.166 |
| 12.5 HP, 230/400 V | **44720-120** | 1 | 65 | 0.166 |
| 12.5 HP, 400/690 V | **44721-120** | 1 | 65 | 0.166 |

| Code | VOLTAGE (V) | POWER | | DIMENSIONS (mm) | | | | | | | |
|---|---|---|---|---|---|---|---|---|---|---|---|
| | | kW | HP | A | B | ØC | D | F | G | H | L |
| **44714-120** | 230/400 | 2,9 | 4 | 255 | 255 | 90 | 105 | 330 | 200 | 470 | 510 |
| **44715-120** | 230/400 | 4 | 5.5 | 355 | 355 | 110 | 105 | 330 | 200 | 470 | 530 |
| **44716-120** | 230/400 | 5.5 | 7.5 | 255 | 255 | 110 | 105 | 330 | 200 | 470 | 530 |
| **44717-120** | 400/690 | | | | | | | | | | |
| **44718-120** | 230/400 | 7.4 | 10 | 255 | 255 | 110 | 105 | 330 | 200 | 470 | 600 |
| **44719-120** | 400/690 | | | | | | | | | | |
| **44720-120** | 230/400 | 9.2 | 12.5 | 255 | 255 | 110 | 105 | 330 | 200 | 470 | 645 |
| **44721-120** | 400/690 | | | | | | | | | | |

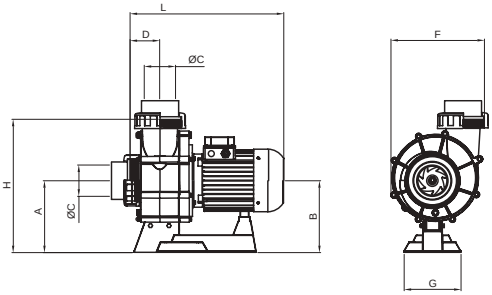


Available in power modes from 4 to 12.5 HP.

**Yield curves - Models with a prefilter**

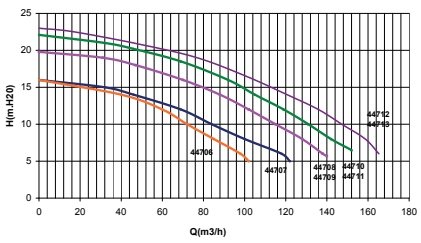


**Yield curves - Models without a prefilter**

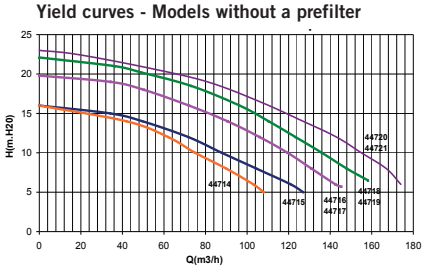

Optional:
60 Hz pumps (code XXXX-0810).



# CENTRIFUGAL PUMPS

## 2.860 r.p.m. Maxim pump

Pump body and supports in plastic, AISI-316 stainless steel motor shaft with double insulation. Motor has IP-55 protection rating. Prefilter basket with a capacity of 8 litres. Transparent prefilter lid.

| | Code | Standard Pack | Standard Weight in kg | Standard Volume in m³ |
|---|---|---|---|---|
| Maxim 3.5 HP pump | **08003** | 1 | 32 | 0.184 |
| Maxim 4.5 HP pump | **08004** | 1 | 34 | 0.184 |
| Maxim 5.5 HP pump | **08005** | 1 | 37 | 0.184 |

Technical features Maxim pump

| Code | Power | Connection | Voltage | mca | | | | | |
|---|---|---|---|---|---|---|---|---|---|
| | | | | 8 | 10 | 12 | 14 | 16 | 19.5 |
| | | | | m³/h | | | | | |
| **08003** | 3.5 HP | 3" threaded joint | 230/400 V III | 56 | 50 | 42 | 34 | 23 | 0 |
| **08004** | 4.5 HP | | 230/400 V III | 74 | 66 | 57 | 46 | 30 | 0 |
| **08005** | 5.5 HP | | 230/400 V III | 88 | 78 | 67 | 53 | 34 | 0 |

**Performance curves**

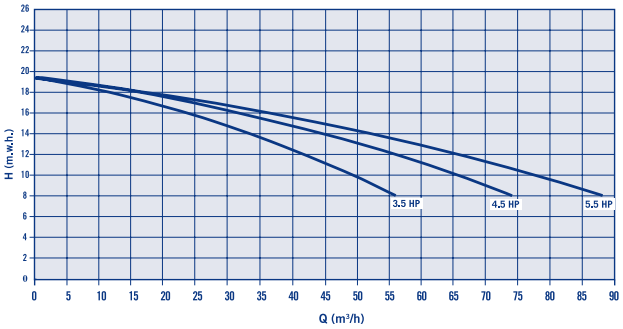


**Size**

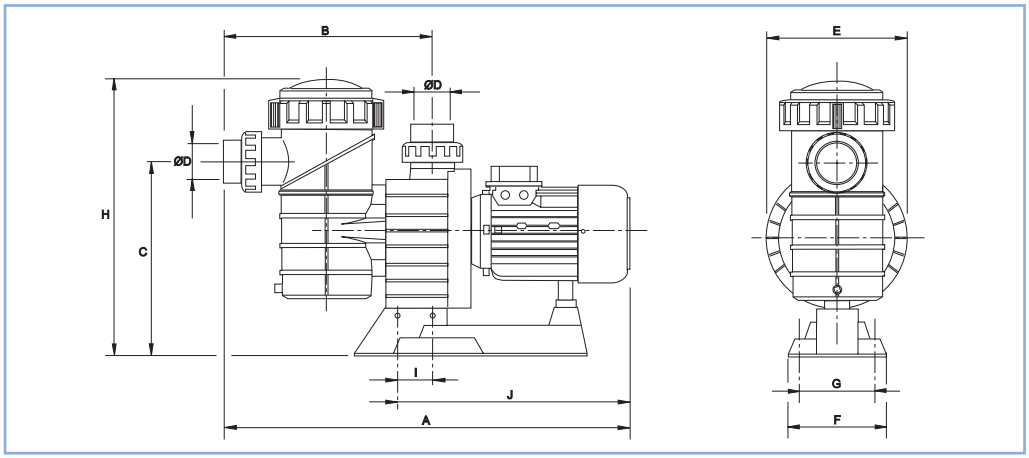


| Model | Type | Voltage | A mm | B mm | C mm | Ø D mm | E mm | F mm | G mm | H mm | I mm | J mm |
|---|---|---|---|---|---|---|---|---|---|---|---|---|
| **08003** | 3,5 | 230/400 | 815 | 430 | 385 | 90 | 287 | 200 | 140 | 530 | 65 | 468 |
| **08004** | 4,5 | 230/400 | 815 | 430 | 385 | 90 | 287 | 200 | 140 | 530 | 65 | 468 |
| **08005** | 5,5 | 230/400 | 847 | 430 | 385 | 90 | 287 | 200 | 140 | 530 | 65 | 500 |

Optional:
60 Hz pumps (code XXXX-0810).

# CENTRIFUGAL PUMPS

## Aral C-3000 pump



Made in cast iron. Mechanical seal in stainless steel. IP-54 motor protection. AISI-316 stainless steel shaft. With stainless steel AISI-304 strainer basket and prefilter. 3000 rpm.
Connections PN 16 according to DIN 2501.

| | Code | Standard Pack | Standard Weight in kg | Standard Volume in $m^3$ |
|---|---|---|---|---|
| Aral C-3000 pump 3 HP | **01193** | 1 | 71 | 0.162 |
| Aral C-3000 pump 4 HP | **01195** | 1 | 74 | 0.162 |
| Aral C-3000 pump 5.5 HP DN 80-3" | **01197** | 1 | 80 | 0.162 |
| Aral C-3000 pump 5.5 HP DN 100-4" | **01199** | 1 | 89 | 0.197 |
| Aral C-3000 pump 7.5 HP | **01201** | 1 | 113 | 0.197 |
| Aral C-3000 pump 10 HP | **01203** | 1 | 115 | 0.197 |
| Aral C-3000 pump 12.5 HP | **01205** | 1 | 115 | 0.197 |
| Aral C-3000 pump 15 HP | **01207** | 1 | 121 | 0.197 |

230 V valid for voltages between 220 & 240 V
400 V valid for voltages between 380 & 420 V
690 V valid for voltages between 660 & 720 V

More technical specifications on the next page

Technical features Aral C-3000 pump

| Code | Power | Connection | Voltage | mca | | | | | |
|---|---|---|---|---|---|---|---|---|---|
| | | | | 8 | 10 | 12 | 14 | 16 | 20 |
| | | | | $m^3/h$ | | | | | |
| **01193** | 2.20 kW (3 HP) | DN 90-3" | 230/400 V III | 59 | 54 | 46 | 40 | 30 | 0 |
| **01195** | 2.95 kW (4 HP) | DN 80-3" | 400/690 V III | 67 | 61 | 55 | 48 | 40 | 0 |
| **01197** | 4.00 kW (5.5 HP) | DN 80-3" | 400/690 V III | 78 | 72 | 66 | 60 | 52 | 0 |
| **01199** | 4.00 kW (5.5 HP) | DN 100-4" | 400/690 V III | 100 | 89 | 70 | 60 | 48 | 0 |
| **01201** | 5.50 kW (7.5 HP) | DN 100-4" | 400/690 V III | 126 | 115 | 100 | 80 | 60 | 0 |
| **01203** | 7.50 kW (10 HP) | DN 100-4" | 400/690 V III | 145 | 140 | 123 | 107 | 86 | 0 |
| **01205** | 9.20 kW (12.5 HP) | DN 125-5" | 400/690 V III | 165 | 158 | 149 | 135 | 115 | 0 |
| **01207** | 11,04 kW (15 HP) | DN 125-5" | 400/690 V III | 195 | 190 | 175 | 160 | 140 | 0 |

## CENTRIFUGAL PUMPS

Technical features Aral C-3000 pump

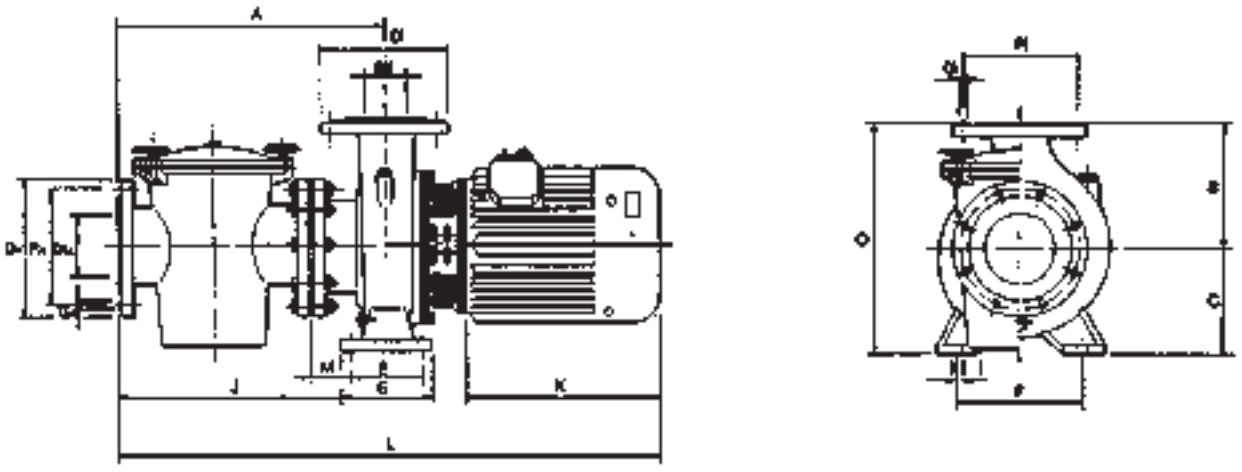


| Code | Voltage V | Intensity | | Power | | Suction connection | | | | | Return connection | | | | |
|---|---|---|---|---|---|---|---|---|---|---|---|---|---|---|---|
| | | III 230 V | III 400 V | kW | HP | $D_A$ (mm) | $DN_A$ | $P_A$ (mm) | $Q_A$ | | $D_i$ (mm) | $DN_i$ | $P_i$ (mm) | $Q_i$ | |
| | | | | | | | | | Nº | Ø (mm) | | | | Nº | Ø (mm) |
| **01193** | 230/400 | 9 | 5.2 | 2.20 | 3 | 200 | 80-3” | 160 | 8 | 18 | 200 | 80-3” | 160 | 8 | 18 |
| **01195** | 400/690 | – | 7 | 2.95 | 4 | 200 | 80-3” | 160 | 8 | 18 | 200 | 80-3” | 160 | 8 | 18 |
| **01197** | 400/690 | – | 9.1 | 4 | 5.5 | 200 | 80-3” | 160 | 8 | 18 | 200 | 80-3” | 160 | 8 | 18 |
| **01199** | 400/690 | – | 9.1 | 4 | 5.5 | 220 | 100-4” | 180 | 8 | 18 | 220 | 100-4” | 180 | 8 | 18 |
| **01201** | 400/690 | – | 11 | 5.5 | 7.5 | 220 | 100-4” | 180 | 8 | 18 | 220 | 100-4” | 180 | 8 | 18 |
| **01203** | 400/690 | – | 15 | 7.5 | 10 | 220 | 100-4” | 180 | 8 | 18 | 220 | 100-4” | 180 | 8 | 18 |
| **01205** | 400/690 | – | 22 | 9.2 | 12.5 | 250 | 125-5” | 210 | 8 | 18 | 220 | 100-4” | 210 | 8 | 18 |
| **01207** | 400/690 | – | 22.5 | 11.04 | 15 | 250 | 125-5” | 210 | 8 | 18 | 250 | 125-5” | 210 | 8 | 18 |

| Code | Power | | Dimensions (mm) | | | | | | | | | | | |
|---|---|---|---|---|---|---|---|---|---|---|---|---|---|---|
| | kW | HP | A | B | C | E | F | G | I | J | K | L | M | O |
| **01193** | 2.20 | 3 | 485 | 180 | 160 | 70 | 212 | 100 | 14 | 435 | 245 | 888 | 65 | 340 |
| **01195** | 2.95 | 4 | 485 | 180 | 160 | 70 | 212 | 100 | 14 | 435 | 245 | 888 | 65 | 340 |
| **01197** | 4 | 5,5 | 485 | 180 | 160 | 70 | 212 | 100 | 14 | 435 | 273 | 920 | 65 | 340 |
| **01199** | 4 | 5,5 | 487 | 205 | 160 | 95 | 187 | 125 | 14 | 425 | 273 | 940 | 55 | 365 |
| **01201** | 5.5 | 7,5 | 487 | 205 | 160 | 95 | 187 | 125 | 14 | 425 | 315 | 976 | 55 | 365 |
| **01203** | 7.5 | 10 | 487 | 205 | 160 | 95 | 187 | 125 | 14 | 425 | 315 | 976 | 55 | 365 |
| **01205** | 9.2 | 12,5 | 487 | 205 | 160 | 95 | 187 | 125 | 14 | 425 | 355 | 1016 | 55 | 365 |
| **01207** | 11.04 | 15 | 517 | 233 | 181 | 95 | 187 | 125 | 14 | 455 | 355 | 1029 | 70 | 365 |

Optional:
60 Hz pumps (code XXXX-0810).

# CENTRIFUGAL PUMPS



## Aral C-1500 pump

Made in cast iron. Mechanical seal in stainless steel. IP-54 motor protection. Stainless steel AISI- 316 shaft. With stainless steel (AISI-304 11 L - AISI-316 37 L) strainer basket. Connections PN 16 according to DIN 2501. 1,450 rpm. Connections PN 16 according to DIN 2501. Connections PN 16 according to DIN 2501.
**Also available with bronze impeller.**

| | Code | Standard Pack | Standard Weight in kg | Standard Volume in $m^3$ |
|---|---|---|---|---|
| Aral C-1500 pump 4 HP | **01210** | 1 | 115.0 | 0.195 |
| Aral C-1500 pump 5.5 HP DN 80-3" | **01212** | 1 | 142.0 | 0.195 |
| Aral C-1500 pump 7.5 HP | **01216** | 1 | 170.0 | 0.407 |
| Aral C-1500 pump 10 HP | **01218** | 1 | 179.0 | 0.407 |
| Aral C-1500 pump 12.5 HP | **01220** | 1 | 215.0 | 0.407 |
| Aral C-1500 pump 20 HP | **01224** | 1 | 255.0 | 0.407 |
| Aral C-1500 pump 25 HP | **01226** | 1 | 255.0 | 0.407 |

400 V valid for voltages between 380 & 420 V
690 V valid for voltages between 660 & 720 V

More technical specifications on the next page

Technical features Aral C-1500 pump

| Code | Power | Suction Connection | Connection Return | Voltage | mca | | | | | |
|---|---|---|---|---|---|---|---|---|---|---|
| | | | | | 10 | 12 | 14 | 16 | 18 | 20 |
| | | | | | $m^3/h$ | | | | | |
| **01210** | 3.00 kW (4 HP) | DN 80-3" | DN 65-2½" | 400/690 V III | 68 | 60 | 45 | 0 | 0 | 0 |
| **01212** | 4.00 kW (5.5 HP) | DN 80-3" | DN 65-2½" | 400/690 V III | 88 | 80 | 70 | 58 | 0 | 0 |
| **01216** | 5.50 kW (7.5 HP) | DN 100-4" | DN 80-3" | 400/690 V III | 115 | 101 | 87 | 70 | 0 | 0 |
| **01218** | 7.50 kW (10 HP) | DN 100-4" | DN 80-3" | 400/690 V III | 150 | 140 | 125 | 115 | NA | 0 |
| **01220** | 9.20 kW (12.5 HP) | DN 125-5" | DN 100-4" | 400/690 V III | 192 | 175 | 155 | 130 | NA | 0 |
| **01224** | 15,00 kW (20 HP) | DN 150-6" | DN 125-5" | 400/690 V III | 240 | 210 | 180 | 145 | 105 | 0 |
| **01226** | 18.40 kW (25 HP) | DN 150-6" | DN 125-5" | 400/690 V III | 275 | 258 | 234 | 202 | 169 | 120 |

## CENTRIFUGAL PUMPS

**Technical features Aral C-1500 pump**

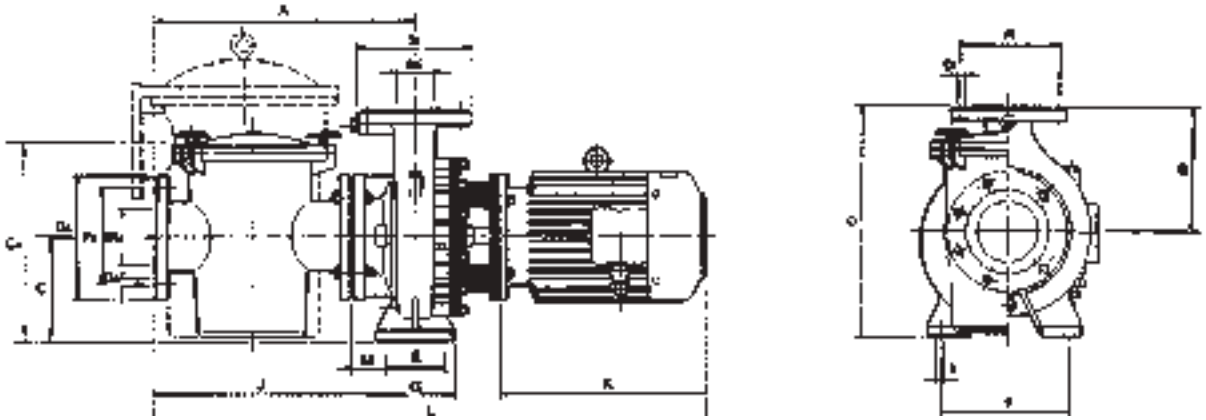

| Code | Voltage V | Intensity | | Power | | Suction connection | | | | | Return connection | | | | |
|---|---|---|---|---|---|---|---|---|---|---|---|---|---|---|---|
| | | III 230 V | III 400 V | kW | HP | $D_A$ (mm) | $DN_A$ | $P_A$ (mm) | $Q_A$ | | $D_i$ (mm) | $DN_i$ | $P_i$ (mm) | $Q_i$ | |
| | | | | | | | | | Nº | Ø (mm) | | | | Nº | Ø (mm) |
| **01210** | 400/690 | – | 7 | 3 | 4 | 200 | 80-3” | 160 | 8 | 18 | 185 | 65-2½” | 145 | 4 | 18 |
| **01212** | 400/690 | – | 9.7 | 4 | 5.5 | 200 | 80-3” | 160 | 8 | 18 | 185 | 65-2½” | 145 | 4 | 18 |
| **01216** | 400/690 | – | 12.3 | 5.5 | 7.5 | 220 | 100-4” | 180 | 8 | 18 | 200 | 80-3” | 160 | 8 | 18 |
| **01218** | 400/690 | – | 16.4 | 7.5 | 10 | 220 | 100-4” | 180 | 8 | 18 | 200 | 80-3” | 160 | 8 | 18 |
| **01220** | 400/690 | – | 19 | 9.20 | 12.5 | 250 | 125-5” | 210 | 8 | 18 | 220 | 100-4” | 180 | 8 | 18 |
| **01224** | 400/690 | – | 32 | 15 | 20 | 285 | 150-6” | 240 | 8 | 22 | 250 | 125-5" | 210 | 8 | 18 |
| ***01226** | 400/690 | – | 36 | 18.40 | 25 | 285 | 150-6” | 240 | 8 | 22 | 250 | 125-5" | 210 | 8 | 18 |

| Code | Power | | Dimensions (mm) | | | | | | | | | | | | |
|---|---|---|---|---|---|---|---|---|---|---|---|---|---|---|---|
| | kW | HP | A | B | C | C1 | E | F | G | I | J | K | L | M | O |
| **01210** | 2.95 | 4 | 482 | 225 | 180 | – | 95 | 250 | 125 | 14 | 419 | 310 | 880 | 50 | 405 |
| **01212** | 4 | 5.5 | 484 | 253 | 196 | – | 120 | 280 | 162 | 18 | 403 | 333 | 967 | 34 | 449 |
| **01216** | 5.5 | 7.5 | 514 | 282 | 193 | – | 120 | 315 | 162 | 18 | 433 | 410 | 1072 | 69 | 486 |
| **01218** | 7.5 | 10 | 514 | 282 | 193 | – | 120 | 315 | 162 | 18 | 433 | 450 | 1112 | 69 | 486 |
| **01220** | 9.20 | 12.5 | 522 | 280 | 224 | – | 120 | 315 | 162 | 18 | 441 | 450 | 1128 | 77 | 504 |
| **01224** | *15 | 20 | 747 | 356 | 255 | 507 | 120 | 315 | 158 | 18 | 668 | 520 | 1438 | 87 | 611 |
| **01226** | *18.40 | 25 | 747 | 356 | 255 | 507 | 120 | 315 | 158 | 18 | 668 | 555 | 1473 | 87 | 611 |

*With strainer 37 l

+ info
Further information on **PRODUCTS**
**www.astralpool.com**

# STRAINERS



## Strainer in polypropylene and fibreglass

Flanges drilled according to DIN-2501 Standard. Supplied with 3 piece coupling at the inlet. 8 litre capacity. Inlet size: Ø 90 mm and outlet Ø 110 mm.

| Code | Standard Pack | Standard Weight in kg | Standard Volume in $m^3$ |
|---|---|---|---|
| **09879** | 1 | 8.4 | 0.098 |



## Strainer in polyester and fibreglass 33 l capacity

Flanges drilled according to DIN-2501 Standard. Hoop type clamp. Drain plug. Maximum working pressure: 1.5 bar.

| | Code | Standard Pack | Standard Weight in kg | Standard Volume in $m^3$ |
|---|---|---|---|---|
| **33 l Capacity** | | | | |
| Connections Ø 90 mm, 37 $m^3/h$ | **04656** | 1 | 27 | 0.180 |
| Connections Ø 110 mm, 55 $m^3/h$ | **04657** | 1 | 27 | 0.180 |
| Connections Ø 125 mm, 72 $m^3/h$ | **04658** | 1 | 27 | 0.180 |
| Connections Ø 140 mm, 90 $m^3/h$ | **04659** | 1 | 27 | 0.180 |



## Strainer in polyester and fibreglass 60 l capacity

Flanges drilled according to DIN-2501 Standard. Hoop type clamp. Drain plug. Maximum working pressure: 1.5 bar.

| | Code | Standard Pack | Standard Weight in kg | Standard Volume in $m^3$ |
|---|---|---|---|---|
| **60 l Capacity** | | | | |
| Connections Ø 160 mm, 118 $m^3/h$ | **10886** | 1 | 39 | 0,357 |
| Connections Ø 200 mm, 184 $m^3/h$ | **10887** | 1 | 39 | 0,357 |
| Connections Ø 225 mm, 233 $m^3/h$ | **10888** | 1 | 39 | 0,357 |



## Strainer in polyester and fibreglass with sight glass lid 33 l capacity

Flanges drilled according to DIN-2501 Standard. Hoop type clamp. Drain plug. Maximum working pressure: 1.5 bar.

| | Code | Standard Pack | Standard Weight in kg | Standard Volume in $m^3$ |
|---|---|---|---|---|
| **33 l Capacity** | | | | |
| Connections Ø 90 mm, 37 $m^3/h$ | **15644** | 1 | 27 | 0.180 |
| Connections Ø 110 mm, 55 $m^3/h$ | **15645** | 1 | 27 | 0.180 |
| Connections Ø 125 mm, 72 $m^3/h$ | **15646** | 1 | 27 | 0.180 |
| Connections Ø 140 mm, 90 $m^3/h$ | **15647** | 1 | 27 | 0.180 |
| Strainer 3", 37 $m^3/h$ | **15648** | 1 | 27 | 0.180 |
| Strainer 4", 55 $m^3/h$ | **15649** | 1 | 27 | 0.180 |

33 l POLYESTER STRAINERS

| Code | 15644 | 15645 | 15646 | 15647 | 15648 | 15649 |
|---|---|---|---|---|---|---|
| **H** | 635 | 635 | 635 | 635 | 635 | 635 |
| **D** | 475 | 475 | 475 | 475 | 475 | 475 |
| **M** | 353 | 353 | 353 | 353 | 353 | 353 |
| **Ø** | 90 | 110 | 125 | 140 | 3" | 4" |
| **E** | 500 | 516 | 532 | 546 | 500 | 516 |

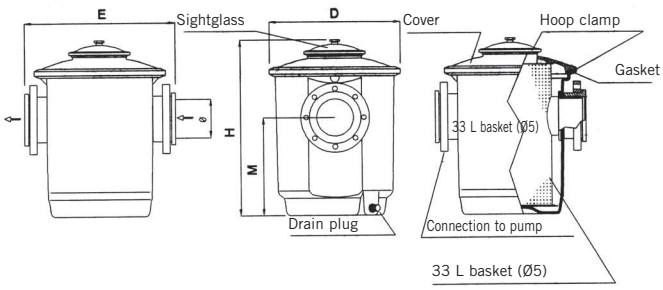

# STRAINERS



## Strainer in polyester and fibreglass with sightglass lid 60 l capacity

Flanges drilled as per DIN-2501 Standard. Hoop type clamp. Drain plug. Maximum working pressure: 1,5 bar.

| | Code | Standard Pack | Standard Weight in kg | Standard Volume in m³ |
|---|---|---|---|---|
| **60 l Capacity** | | | | |
| Connections Ø 160 mm. 118 m³/h | **15650** | 1 | 39 | 0.357 |
| Connections Ø 200 mm. 174 m³/h | **15651** | 1 | 39 | 0.357 |
| Connections Ø 225 mm. 233 m³/h | **15652** | 1 | 39 | 0.357 |
| Strainer 6". 118 m³/h | **15653** | 1 | 39 | 0.357 |
| Strainer 8". 233 m³/h | **15654** | 1 | 39 | 0.357 |

60 l POLYESTER STRAINER

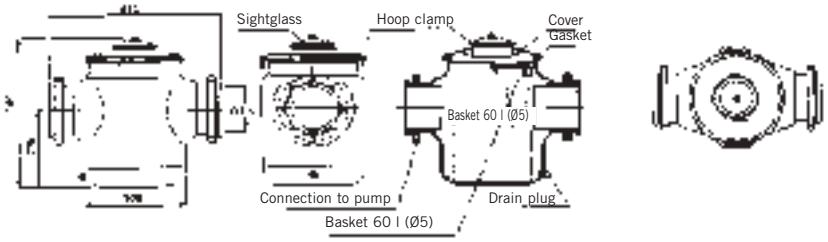




## Kivu strainers

Flanges drilled to standard DIN-2501. Quick closing lid. Polypropylene basket. Drain plug. Maximum working pressure 1.5 bar.

| | Code | Standard Pack | Standard Weight in kg | Standard Volume in m³ |
|---|---|---|---|---|
| **25 l Capacity** | | | | |
| 6" Connections DN 150 | **56733** | 1 | 9.9 | 0.08 |



## Strainer Astramax pump

Strainer for Astramax pump. Body in ABS and fibreglass. With transparent lid and anti-corrosive strainer basket. Suction 2¼" male thread. Connection to pump 2¾" female thread.

| Code | Standard Pack | Standard Weight in kg | Standard Volume in m³ |
|---|---|---|---|
| **16104** | 1 | 1.5 | 0.017 |



**Aral 11 l**

## Aral strainers

Housing and cover in cast iron. AISI-304 Stainless Steel Strainer basket. Flange connection are manufactured in accordance with DIN-2501 Standard. Maximum working pressure 2.5 bar.

| | Code | Standard Pack | Standard Weight in kg | Standard Volume in m³ |
|---|---|---|---|---|
| **11 l Capacity** | | | | |
| Flanges DN 65 (2½") DN 65 (2½") | **20026** | 1 | 35 | 0.051 |
| Flanges DN 80 (3") DN 80 (3") | **20028** | 1 | 35 | 0.051 |
| Flanges DN 100 (4") DN 100 (4") | **20029** | 1 | 35 | 0.051 |
| Flanges DN 125 (5") DN 125 (5") | **20030** | 1 | 35 | 0.051 |
| Flanges DN 80 (3") DN 65 (2½") | **20031** | 1 | 35 | 0.051 |
| Flanges DN100 (4") DN 80 (3") | **20032** | 1 | 35 | 0.051 |
| Flanges DN 125 (5") DN 100 (4") | **20033** | 1 | 35 | 0.051 |
| **37 l Capacity** | | | | |
| Flanges DN 150 (6") DN 150 (6") | **01268** | 1 | 129 | 0.319 |



**Aral 37 l**

+ info
Further information on **PRODUCTS**
**www.astralpool.com**

# STRAINERS



## Strainers in Stainless Steel

With removable basket. Housing in AISI-304 and strainer basket in AISI-316. Models come in varying diameters to suit pump suctions (impeller protection). Rough straining for different installations.

| | Code | Standard Pack | Standard Weight in kg | Standard Volume in $m^3$ |
|---|---|---|---|---|
| S.S. strainer DN 100 with PVC flange | **21461** | 1 | 17.6 | 0.06 |
| S.S. strainer DN 100 TF with PVC flange | **21462** | 1 | 21.6 | 0.09 |
| S.S. strainer DN 125 with PVC flange | **21463** | 1 | 19.0 | 0.06 |
| S.S. strainer DN 125 TF with PVC flange | **21464** | 1 | 23.0 | 0.09 |
| S.S. strainer DN 150 with PVC flange | **21465** | 1 | 24.8 | 0.08 |
| S.S. strainer DN 150 TF with PVC flange | **21466** | 1 | 31.0 | 0.13 |
| S.S. strainer DN 200 with PVC flange | **21467** | 1 | 25.4 | 0.08 |
| S.S. strainer DN 200 TF with PVC flange | **21468** | 1 | 31.6 | 0.13 |

**TECHNICAL FEATURES**

| Code | Diameter | | Pressure (bar) | External volume | | | | | Interior basket | | | | Total weight |
|---|---|---|---|---|---|---|---|---|---|---|---|---|---|
| | Input connection | Relief | | Dimensions (mm) | | | | | Material | Dimensions (mm) | | | |
| | | | | A | B | H | H1 | H2 | | Ø | H | Perforation | |
| **21461** | DN 100 | ½" | 3 | 292 | 410 | 520 | 294 | 254 | AISI 316 | 270 | 350 | 6 mm | 17.6 |
| **21462** | DN 100 | ½" | 3 | 292 | 425 | 735 | 593 | 308 | AISI 316 | 270 | 415 | 6 mm | 21.6 |
| **21463** | DN 125 | ½" | 3 | 292 | 410 | 520 | 294 | 254 | AISI 316 | 270 | 350 | 6 mm | 19.0 |
| **21464** | DN 125 | ½" | 3 | 292 | 425 | 735 | 593 | 308 | AISI 316 | 270 | 415 | 6 mm | 23.0 |
| **21465** | DN 150 | ½" | 3 | 350 | 450 | 520 | 294 | 254 | AISI 316 | 320 | 350 | 6 mm | 24.8 |
| **21466** | DN 150 | ½" | 3 | 350 | 470 | 775 | 595 | 295 | AISI 316 | 320 | 415 | 6 mm | 31.0 |
| **21467** | DN 200 | ½" | 3 | 350 | 450 | 520 | 294 | 254 | AISI 316 | 320 | 350 | 6 mm | 25.4 |
| **21468** | DN 200 | ½" | 3 | 350 | 470 | 775 | 595 | 295 | AISI 316 | 320 | 415 | 6 mm | 31.6 |

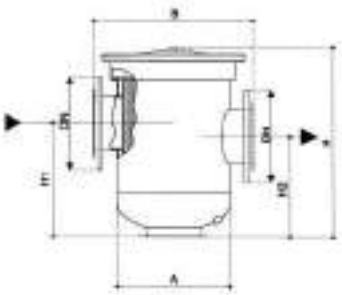

**STANDARD model**

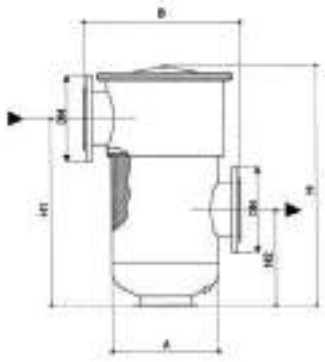

**TF model**

# VALVES AND HOSES



## Check valves

Nominal pressure 10 kg/$cm^2$. Mounted between flanges. Available in PN 16 and PN 25 under special order.

| | Code | Standard Pack | Standard Weight in kg | Standard Volume in $m^3$ |
|---|---|---|---|---|
| Outlets Ø 50 mm | **20239** | 1 | – | – |
| Outlets Ø 65 mm | **20240** | 1 | – | – |
| Outlets Ø 80 mm | **20241** | 1 | – | – |
| Outlets Ø 100 mm | **20242** | 1 | – | – |
| Outlets Ø 125 mm | **20243** | 1 | – | – |
| Outlets Ø 150 mm | **20244** | 1 | – | – |
| Outlets Ø 200 mm | **20245** | 1 | – | – |
| Outlets Ø 250 mm | **20246** | 1 | – | – |

# VALVES AND HOSES



## Vibration absorbent brushing

Flanges in galvanized steel. Elastic material: Polychloroprene. Maximum temperature: 95° C. Nominal pressure: 10 kg/cm$^2$ (PN/10).

| | Code | Standard Pack | Standard Weight in kg | Standard Volume in m$^3$ |
|---|---|---|---|---|
| Outlets Ø 50 mm | **20231** | 1 | – | – |
| Outlets Ø 65 mm | **20232** | 1 | – | – |
| Outlets Ø 80 mm | **20233** | 1 | – | – |
| Outlets Ø 100 mm | **20234** | 1 | – | – |
| Outlets Ø 125 mm | **20235** | 1 | – | – |
| Outlets Ø 150 mm | **20236** | 1 | – | – |
| Outlets Ø 200 mm | **20237** | 1 | – | – |
| Outlets Ø 250 mm | **20238** | 1 | – | – |





# COMMERCIAL POOLS
# WATER TREATMENT EQUIPMENT


540 • Freepool²
542 • Salt electrolysis and pH/Cl control
545 • Neolysis for public pools
547 • Automatic UV disinfection
550 • Dosing pumps
556 • Continuous flocculation system
556 • Water meters
556 • Automatic regulation and control equipment

## FREEPOOL²

# freepool²

### Salt chlorinator + UV + $CO_2$



Freepool² disinfects the water thanks to the slat chlorinator and the UV and corrects pH levels by injecting $CO_2$ through the reactor

**75% reduction**
in the concentration of **oxidants** in the atmosphere, improving the quality of the atmosphere and reducing the smell of chlorine.

**20% reduction**
of **combined chloramines** in the water, reducing skin and eye irritation and respiratory complications.

**100% reduction**
in the addition of diluted **acids and chlorinated products**; completely avoids the need to add chlorinated products and acids.

**66% reduction**
in the consumption of new supplies of **water**, with savings in water and energy wherever it is installed.

+ info
Further information on **PRODUCTS**
**www.astralpool.com**

# FREEPOOL²

## Pools without chemical products that deliver unbeatable water and air quality

Revolutionary public pool water treatment and disinfection system. Freepool² keeps the quality of water to the highest standards without the need to add chemical products.

Freepool² is a unique product that comes with three water treatment technologies that optimize disinfection and pH levels: a low-salinity salt chlorinator for disinfecting the water, medium-pressure UV for reducing combined chloramines and a $CO_2$ injection system for adjusting the pH.

The main advantages of Freepool² are:

- **Water quality.** Studies carried out by Universidad Autónoma de Barcelona and Hospital Clínic de Barcelona revealed that swimmers' perception of a "perfectly clean" atmosphere increased significantly.
- **Safety.** There is no need to store, handle or measure out chemicals and it is therefore a safer system.

Technical features:

- Chlorine output of 180 g/h
- Three 90 W UV lamps
- $CO_2$ injector and pH control kit for dosing and absorption

COMPATIBLE NN thing
*Fluidra Connect compatible*





**60361**

## Freepool²

| | Code | Standard Pack | Standard Weight in kg | Standard Volume in m³ |
|---|---|---|---|---|
| Freepool² 180 g Cl/h | **70990** | 1 | - | - |

## AP PR-200 control unit compatible with Freepool²

Recommended unit:

| | Code | Standard Pack | Standard Weight in kg | Standard Volume in m³ |
|---|---|---|---|---|
| AP PR-207 pH/Cl2 PPM* | **60361** | 1 | - | - |
| AP PR-207 pH/Cl2 PPM + integrated TRI KIT* | **60361-KIT TRI** | 1 | - | - |
| ECC1S Electrolyte / free chlorine sensor gel (seawater) | **64658** | 1 | - | - |

Universitat Autònoma de Barcelona

CLÍNIC BARCELONA Hospital Universitari

**The benefits of Freepool have been backed up by two studies conducted by Universitat Autònoma de Barcelona and Hospital Universitari Clínic de Barcelona.**

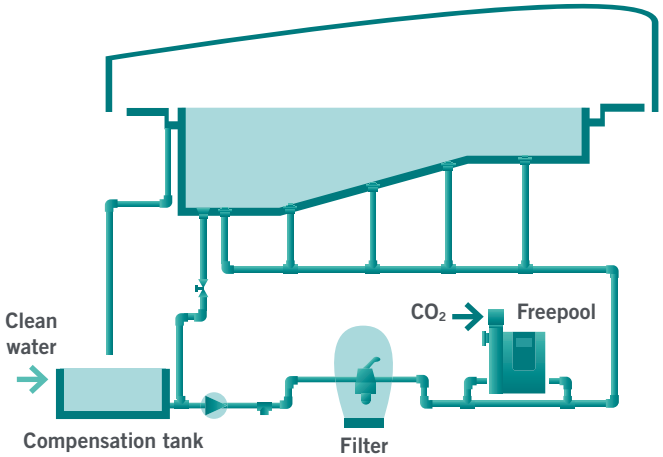

+ info PDB
Further information on **PRODUCTS**
**www.astralpool.com**

# SALT ELECTROLYSIS AND PH/CL CONTROL

## Salt Electrolysis for public pools

Salt water chlorinators for commercial pools are becoming popular because they are efficient, practical, safe and well priced.

Our wide range of industrial electrolysis systems covers self-cleaning equipment of up to 600 grams/hour of Chlorine, which makes it possible to use saline electrolysis to treat the water at any public use facility.

**Main advantages:**

- **Safety: There is no need to store, handle or dose any chemical products and therefore it is a much safer system. The raw material stored is common salt.**
- **Savings**: The introduction of saline electrolysis systems can bring net savings in operating costs of around 50-60%, with respect to traditional systems.

Peristaltic pump not included.

| | Easy Salt | Pro-Chlore Salt | Nature Salt |
|---|---|---|---|
| **Self-cleaning electrodes** | 10,000 - 12,000 h | 12,000 - 15,000 h | 12,000 - 15,000 h |
| **Salinity range** | 5–12 g/l (recommended 5–6 g/l) | 5–12 g/l (recommended 5–6 g/l) | 1.5–3 g/l (recommended: 2–2,5 g/l) (*) |
| **Production (g/h)** | 70 - 180 | 50 - 600 | 50 - 300 |

(*) Operating range 1.5–5 g/l depending on the temperature (28–35 ºC) and nominal output (80–100%)





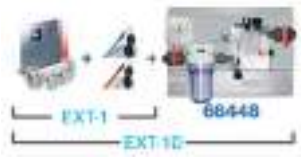




COMPATIBLE NN thing
*Fluidra Connect compatible*

## Easy Salt

SELF-CLEANING salt electrolysis system for residential and public pool applications of up to 180 g chlorine/hour. Easy Salt is a compact and cost-competitive piece of equipment. To control more than one unit for the same pool you will need an AP PR-200 external control or Smart Control and the TRI multiple control kit (code 70338).

| | Code | Standard Pack | Standard Weight in kg | Standard Volume in $m^3$ |
|---|---|---|---|---|
| Easy Salt 50 | **66151** | 1 | 30 | 0.29 |
| Easy Salt 70 | **53799** | 1 | 70 | 0.29 |
| Easy Salt 90 | **53801** | 1 | 80 | 0.29 |
| Easy Salt 180 | **53803** | 1 | 90 | 0.29 |
| External control option (AP PR 60359-60361-60362, Smart Control 54523-4-5) | | | | |
| Easy Salt 50 + pH/ORP (EXT-1) | **66153** | 1 | 30 | 0.29 |
| Easy Salt 70 + pH/ORP (EXT-1) | **53800** | 1 | 70 | 0.29 |
| Easy Salt 90 + pH/ORP (EXT-1) | **53802** | 1 | 80 | 0.29 |
| Easy Salt 180 + pH/ORP (EXT-1) | **53804** | 1 | 90 | 0.29 |
| Optional sensor holder for EXT-1 (EXT-1+66448 = EXT-1D) | **66448** | 1 | - | - |
| Optional: Connection kit compatible with Fluidra Connect | **60363** | 1 | 0.39 | 0.002 |

Valid for Easy Salt and Pro-Chlore Salt and Nature Salt:

| | pH | ORP | FREE CHLORINE* |
|---|---|---|---|
| **Components supplied** | H-035 sensor<br>pH calibration solution (7,0/4,0) | RX-02 sensor<br>ORP calibration solution (470 mV) | CL0102 sensor<br>ID-CAL calibration card |
| | Two PE ½" sensor holder connectors (standard in all models); sensor holder panel with inductive flow rate detector; flow rate and pre-filter adjustment (standard in ppm models) | | |
| **Size** | 600 x 240 x 120 mm (panel) | | |
| **pH control output** | 230 V / 50-60 Hz / 0,5 A max, ON/OFF | | |
| **Scale** | 0.0 - 9.9 | 0 - 999 mV | 0.0 - 5.0 ppm |
| **Control range** | 7.0 - 7.8 | 650 - 850 mV | 0.0 - 5.0 ppm |
| **Accuracy** | 0.1 pH | 1 mV | 0.1 ppm |
| **Calibration** | (pH) Automatic; two modes<br>Fast: one-point calibration<br>Standard: Two-point calibration | Automatic: one-point calibration | FREE CHLORINE: automatic (one-point using external DPD calibrator – not supplied) |

*Not available for Easy Salt

## SALT ELECTROLYSIS AND PH/CL CONTROL



### Pro-Chlore Salt

Our Pro-Chlore Salt range includes EX electrodes that provide the highest level of durability in self-cleaning systems. The Pro-Chlore Salt range with its integrated EXTENSION options (EXT-1, EXT-1E, EXT-2) or external control options (AP PR200, Smart Control) includes a control and regulation system for ORP values (Redox) or ppm, as well as pH, allowing improved management of the equipment and an excellent water quality at all times. The Pro-Chlore range can be manufactured, on request, for seawater (Pro Chlore Salt AM Series). To control more than one unit for the same pool you will need an AP PR-200 external control or Smart Control and the TRI multiple control kit (code 70338).



| | Code | Standard Pack | Standard Weight in kg | Standard Volume in m³ |
|---|---|---|---|---|
| Pro-Chlore Salt A-50EX | **35252** | 1 | 55 | 0.17 |
| Pro-Chlore Salt A-80EX | **35253** | 1 | 65 | 0.19 |
| Pro-Chlore Salt A-120EX | **35254** | 1 | 100 | 0.36 |
| Pro-Chlore Salt A-180EX | **35255** | 1 | 120 | 0.36 |
| Pro-Chlore Salt A-300EX | **35256** | 1 | 140 | 0.36 |
| Pro-Chlore Salt A-600EX | **35257** | 1 | 200 | 0.74 |
| External control option (AP PR 60359-60361-60362, Smart Control 54523-4-5) | | | | |




| | | | | |
|---|---|---|---|---|
| Pro-Chlore Salt A-50EX + pH/ORP (EXT-1) | **35258** | 1 | 55 | 0.17 |
| Pro-Chlore Salt A-80EX + pH/ORP (EXT-1) | **35259** | 1 | 65 | 0.19 |
| Pro-Chlore Salt A-120EX + pH/ORP (EXT-1) | **35260** | 1 | 100 | 0.36 |
| Pro-Chlore Salt A-180EX + pH/ORP (EXT-1) | **35261** | 1 | 120 | 0.36 |
| Pro-Chlore Salt A-300EX + pH/ORP (EXT-1) | **35262** | 1 | 140 | 0.36 |
| Pro-Chlore Salt A-600EX + pH/ORP (EXT-1) | **35263** | 1 | 200 | 0.74 |
| Optional sensor holder for EXT-1 (EXT-1+57769=EXT-1E) | **57769** | 1 | - | - |




| | | | | |
|---|---|---|---|---|
| Pro-Chlore Salt A-50EX + pH/PPM (EXT-2) | **45836** | 1 | 60 | 0.17 |
| Pro-Chlore Salt A-80EX + pH/PPM (EXT-2) | **45837** | 1 | 70 | 0.19 |
| Pro-Chlore Salt A-120EX + pH/PPM (EXT-2) | **45838** | 1 | 105 | 0.36 |
| Pro-Chlore Salt A-180EX + pH/PPM (EXT-2) | **45839** | 1 | 125 | 0.36 |
| Pro-Chlore Salt A-300EX + pH/PPM (EXT-2) | **45840** | 1 | 145 | 0.36 |
| Pro-Chlore Salt A-600EX + pH/PPM (EXT-2) | **45841** | 1 | 205 | 0.74 |
| Sensor holder included with EXT-2 | | | | |

AM

Options for seawater (on request). Example: 45836-AM.

COMPATIBLE NN thing

*Fluidra Connect compatible*



| | | | | |
|---|---|---|---|---|
| Optional: Connection kit compatible with Fluidra Connect | **60363** | 1 | 0.39 | 0.002 |

| | A-50 | A-80 | A-120 | A-180 | A-300 | A-600 |
|---|---|---|---|---|---|---|
| **Power supply (AC)** | 230 V / 50 - 60 Hz | | | 380 V / 50 - 60 Hz | | |
| **Power rating (AC) 30C 5 g/l** | 1.6 A | 2.9 A | 4.6 A | 2.6 A | 4.3 A | 8.2 A |
| **Cable:** | H017 V/K | | | | | |
| **Input (AC)** | 3 x 1.0 mm² | 3 x 1.0 mm² | 3 x 2.5 mm² | 5 x 1.5 mm² | 5 x 4 mm² | 5 x 4.0 mm² |
| **Output (DC)** | 2 x 10 mm² | 2 x 25 mm² | 2 x 35 mm² | 2 x 70 mm² | 2 x 120 mm² | 3 x 240 mm² |
| **Pipe connection** | Female thread 1½" | Flanges D63 mm | | Flanges D90 mm | | |
| **Fuse** | 5 AT (6 x 32 mm) | 7 AT (6 x 32 mm) | 10 AT (6 x 32 mm) | QM K10A | QM K20A | QM K25A |
| **Outlet** | 9 V / 25 A | 10 V / 40 A | 10 V / 60A | 10 V / 90 A | 10 V / 150 A | 10 V / 300 A |
| **Cooling** | Natural | Fan | | | | |
| **Minimum flow rate** | 9 m³/h | 14 m³/h | 20 m³/h | 30 m³/h | 50 m³/h | 90 m³/h |
| **Number of plates per electrode** | 8 | 12 | 8 | 12 | 16 | 2 x 15 |

+ info
PDB
Further information on **PRODUCTS**
**www.astralpool.com**

# SALT ELECTROLYSIS AND PH/CL CONTROL

## Nature Salt



Nature Salt equipment has a sustainable cycle through the removal of chloramines, 2 g salt/litre operation and chemical-free treatment. SELF-CLEANING industrial salt electrolysis system for public pool applications of up to 300 g chlorine/hour. High-pressure TWINCELL SYSTEM fitted with quality Nature Salt electrodes. To control more than one unit for the same pool you will need an AP PR-200 external control or Smart Control and the TRI multiple control kit (code 70338).



| | Code | Standard Pack | Standard Weight in kg | Standard Volume in m³ |
|---|---|---|---|---|
| Nature Salt 50EX/LS | **53810** | 1 | 80 | 0.17 |
| Nature Salt 80EX/LS | **53811** | 1 | 90 | 0.19 |
| Nature Salt 120EX/LS | **53812** | 1 | 130 | 0.36 |
| Nature Salt 180EX/LS | **53813** | 1 | 145 | 0.36 |
| Nature Salt 300EX/LS | **53814** | 1 | 170 | 0.36 |
| External control option (AP PR 60359-60361-60362, Smart Control 54523-4-5) | | | | |
| Nature Salt 50EX/LS + pH/ORP (EXT-1) | **53815** | 1 | 80 | 0.17 |
| Nature Salt 80EX/LS + pH/ORP (EXT-1) | **53816** | 1 | 90 | 0.19 |
| Nature Salt 120EX/LS + pH/ORP (EXT-1) | **53817** | 1 | 130 | 0.36 |
| Nature Salt 180EX/LS + pH/ORP (EXT-1) | **53818** | 1 | 145 | 0.36 |
| Nature Salt 300EX/LS + pH/ORP (EXT-1) | **53819** | 1 | 170 | 0.36 |
| Optional sensor holder for EXT-1 (EXT-1+57769=EXT-1E) | **57769** | 1 | - | - |
| Nature Salt 50EX/LS + pH/PPM (EXT-2) | **53820** | 1 | 85 | 0.36 |
| Nature Salt 80EX/LS + pH/PPM (EXT-2) | **53821** | 1 | 95 | 0.36 |
| Nature Salt 120EX/LS + pH/PPM (EXT-2) | **53822** | 1 | 135 | 0.36 |
| Nature Salt 180EX/LS + pH/PPM (EXT-2) | **53823** | 1 | 150 | 0.74 |
| Nature Salt 300EX/LS + pH/PPM (EXT-2) | **53824** | 1 | 175 | 0.74 |
| Sensor holder included with EXT-2 | | | | |







COMPATIBLE NN thing
*Fluidra Connect compatible*



| | | | | |
|---|---|---|---|---|
| Optional: Connection kit compatible with Fluidra Connect | **60363** | 1 | 0.39 | 0.002 |

## Self-cleaning electrodes









| | Code | Standard Pack | Standard Weight in kg | Standard Volume in m³ |
|---|---|---|---|---|
| **Pro-Chlore Salt Series** | | | | |
| A-50EX/EXT-1/EXT-2 | **60634** | 1 | - | - |
| A-80EX/EXT-1/EXT-2 | **60636** | 1 | - | - |
| A-120EX/EXT-1/EXT-2 | **60676** | 1 | - | - |
| A-180EX/EXT-1/EXT-2 | **60677** | 1 | - | - |
| A-300EX/EXT-1/EXT-2 | **60678** | 1 | - | - |
| A-600EX/EXT-1/EXT-2 | **60679** | 1 | - | - |
| **Nature Salt Series** | | | | |
| A-50EX/LS/EXT-1/EXT-2 | **60680** | 1 | - | - |
| A-80EX/LS/EXT-1/EXT-2 | **60681** | 1 | - | - |
| A-120EX/LS/EXT-1/EXT-2 | **60682** | 1 | - | - |
| A-180EX/LS/EXT-1/EXT-2 | **60683** | 1 | - | - |
| A-300EX/LS/EXT-1/EXT-2 | **60684** | 1 | - | - |
| **Easy Salt Series** | | | | |
| EASY SALT 50/EXT-1 | **68104** | 1 | - | - |
| EASY SALT 70/EXT-1 | **60685** | 1 | - | - |
| EASY SALT 90/EXT-1 | **60686** | 1 | - | - |
| EASY SALT 180/EXT-1 | **60687** | 1 | - | - |

Technical specifications on the following page

# NEOLYSIS FOR PUBLIC POOLS



**Neolysis**, the most advanced water treatment by AstralPool: + Sustainability + Innovation + Disinfection + Healthy.

**Advantages:**

- Unbeatable water quality.
- Dual disinfection based on UV and electrolysis.

**Characteristics:**

- Two options: low salinity of 2–3 g/l (Neo LS) and standard salinity of 6 g/l (Neo S).
- The ultimate in chloramine reduction capacity (UV LP + Electrolysis).
- Self-cleaning electrodes that last 12,000–15,000 hours (NeoLS and Neo S).
- LP HO UV lamp (13,000 hours)
- Patented process.
- To control more than one unit for the same pool you will need an AP PR-200 external control or Smart Control and the TRI multiple control kit (code 70338).

## Neolysis S (5-6 g/L) + UV for public pools



**EXT-1 + 57769 = EXT-1E**




**Sensor holder included in EXT-2**






*Fluidra Connect compatible*



| | Code | Standard Pack | Standard Weight in kg | Standard Volume in m³ |
|---|---|---|---|---|
| AP NEO/S 50 Gr/h + UV 75 W | **66142** | 1 | - | - |
| AP NEO/S 80 Gr/h + UV 90 W | **66143** | 1 | - | - |
| AP NEO/S 120 Gr/h + UV 2 x 90 W | **66144** | 1 | - | - |
| AP NEO/S 180 Gr/h + UV 3 x 90 W | **68120** | 1 | - | - |
| AP NEO/S 300 Gr/h + UV 4 x 90 W | **68123** | 1 | - | - |
| External control option (AP PR 60359-60361-60362, Smart Control 54523-4-5) | | | | |
| AP NEO/S 50 Gr/h + UV 75 W + pH/ORP (EXT-1) | **66145** | 1 | - | - |
| AP NEO/S 80 Gr/h + UV 90 W + pH/ORP (EXT-1) | **66146** | 1 | - | - |
| AP NEO/S 120 Gr/h + UV 2 x 90 W + pH/ORP (EXT-1) | **66147** | 1 | - | - |
| AP NEO/S 180 Gr/h + UV 3 x 90 W + pH/ORP (EXT-1) | **68121** | 1 | - | - |
| AP NEO/S 300 Gr/h + UV 4 x 90 W + pH/ORP (EXT-1) | **68124** | 1 | - | - |
| Optional sensor holder for EXT-1 | **57769** | 1 | - | - |
| AP NEO/S 50 Gr/h + UV 75 W + pH/PPM (EXT-2) | **66148** | 1 | - | - |
| AP NEO/S 80 Gr/h + UV 90 W + pH/PPM (EXT-2) | **66149** | 1 | - | - |
| AP NEO/S 120 Gr/h + UV 2 x 90 W + pH/PPM (EXT-2) | **66150** | 1 | - | - |
| AP NEO/S 180 Gr/h + UV 3 x 90 W + pH/PPM (EXT-2) | **68122** | 1 | - | - |
| AP NEO/S 300 Gr/h + UV 4 x 90 W + pH/PPM (EXT-2) | **68125** | 1 | - | - |
| Optional: Connection kit compatible with Fluidra Connect (without lamp control) | **60363** | 1 | 0.39 | 0.002 |

## Neolysis LS (1.5-2 g/L) + UV for public pools



**EXT-1 + 57769 = EXT-1E**




**Sensor holder included in EXT-2**






*Fluidra Connect compatible*



| | Code | Standard Pack | Standard Weight in kg | Standard Volume in m³ |
|---|---|---|---|---|
| AP NEO 50 Gr/h + UV 75 W | **57753** | 1 | - | - |
| AP NEO 80 Gr/h + UV 90 W | **57761** | 1 | - | - |
| AP NEO 120 Gr/h + UV 2 x 90 W | **57762** | 1 | - | - |
| AP NEO 180 Gr/h + UV 3 x 90 W | **68117** | 1 | - | - |
| External control option (AP PR 60359-60361-60362, Smart Control 54523-4-5) | | | | |
| AP NEO 50 Gr/h + UV 75 W + pH/ORP (EXT-1) | **57763** | 1 | - | - |
| AP NEO 80 Gr/h + UV 90 W + pH/ORP (EXT-1) | **57764** | 1 | - | - |
| AP NEO 120 Gr/h + UV 2 x 90 W + pH/ORP (EXT-1) | **57765** | 1 | - | - |
| AP NEO 180 Gr/h + UV 3 x 90 W + pH/ORP (EXT-1) | **68118** | 1 | - | - |
| Optional sensor holder for EXT-1 | **57769** | 1 | - | - |
| AP NEO 50 Gr/h + UV 75 W + pH/PPM (EXT-2) | **57766** | 1 | - | - |
| AP NEO 80 Gr/h + UV 90 W + pH/PPM (EXT-2) | **57767** | 1 | - | - |
| AP NEO 120 Gr/h + UV 2 x 90 W + pH/PPM (EXT-2) | **57768** | 1 | - | - |
| AP NEO 180 Gr/h + UV 3 x 90 W + pH/PPM (EXT-2) | **68119** | 1 | - | - |
| Optional: Connection kit compatible with Fluidra Connect (without lamp control) | **60363** | 1 | 0.39 | 0.002 |

+ info
PDB
Further information on **PRODUCTS**
**www.astralpool.com**

# NEOLYSIS FOR PUBLIC POOLS

## Neolysis LS / S - Technical features

| Neolysis S (5 - 6 g/L) + UV | | | |
|---|---|---|---|
| **AP NEO Basic** | **AP NEO pH/ORP** | **AP NEO pH/PPM** | **Production Zero Salt Electrolysis + UV** |
| **66142** | **66145** | **66148** | 50 gr $Cl_2$ /hr + 75 W UV |
| **66143** | **66146** | **66149** | 80 gr $Cl_2$ /hr + 90 W UV |
| **66144** | **66147** | **66150** | 120 gr $Cl_2$ /hr + 180 W UV |
| **68120** | **68121** | **68122** | 180 gr $Cl_2$ /hr + 270 W UV |
| **68123** | **68124** | **68125** | 300 gr $Cl_2$ /hr + 360 W UV |

| Neolysis LS (1.5 - 2 g/L) + UV | | | |
|---|---|---|---|
| **AP NEO Basic** | **AP NEO pH/ORP** | **AP NEO pH/PPM** | **Production Zero Salt Electrolysis + UV** |
| **57753** | **57763** | **57766** | 50 gr $Cl_2$ /hr + 75 W UV |
| **57761** | **57764** | **57767** | 80 gr $Cl_2$ /hr + 90 W UV |
| **57762** | **57765** | **57768** | 120 gr $Cl_2$ /hr + 180 W UV |
| **68117** | **68118** | **68119** | 180 gr $Cl_2$ /hr + 270 W UV |

## LS/S Neolysis electrodes for public pools





| | Code | Standard Pack | Standard Weight in kg | Standard Volume in $m^3$ |
|---|---|---|---|---|
| 75-W UV LP-20 lamp (Codes 57753, 57763, 57766, 66142, 66145, 66148) | **60608** | 1 | 0.10 | - |
| 90-W UV LP-25 lamp (Codes 57761, 57764, 57767, 68117, 68118, 68119, 66143, 66146, 66149, 68120, 68121, 68122, 68123, 68124, 68125) | **60609** | 1 | 0.10 | - |
| Lamp replacement kit UV LP 2x90 W (Codes 57762, 57765, 57768, 66144, 66147, 66150) | **60619** | 1 | 0.20 | - |
| UV LP-20/25/30 quartz (lamps 75 W and 90 W) | **60631** | 1 | 0.09 | - |

## LS/S Neolysis electrodes for public pools



| | Code | Standard Pack | Standard Weight in kg | Standard Volume in $m^3$ |
|---|---|---|---|---|
| 50 gr/h - 75 W Neolysis electrode (Codes 57753, 57763, 57766) | **61119** | 1 | - | - |
| 80 gr/h - 90 W Neolysis electrode (Codes 57761, 57764, 57767) | **61120** | 1 | - | - |
| 120 gr/h - 2 x 90 W Neolysis electrode (Codes 57762, 57765, 57768) | **61121** | 1 | - | - |
| 180 gr/h - 3 x 90 W Neolysis electrode (Codes 68117, 68118, 68119) | **68126** | 1 | - | - |

## AUTOMATIC UV DISINFECTION



AstralPool presents Heliox UV, a new automatic UVC light system, which guarantees double disinfection through a significant reduction in the amount of chloramines (bound chlorine) along with the neutralisation of bacteria, viruses and other microorganisms present in water by impeding their reproduction. The range comprises the Heliox UV LP model for private pools, the Heliox UV MP for public pools.

**The advantages of UV-C technology:**

UV ray treatment systems are completely automatic, with very low maintenance and running costs. They also have considerable advantages over other systems:

- 100% of pool water is treated.
- The disinfected water is free of unpleasant smells and does not irritate the eyes, thanks to a drastic reduction in the amount of chloramines.
- They save money as fewer chemical products are required.
- They are environmentally friendly because:
  Less fresh water is needed (daily water renewal is reduced).
  Fewer waste by-products are formed, resulting in a reduction in subsequent water treatment.
  The UV-C equipment does not add any chemical products to the water.

**Heliox-UV operation**

UV-C disinfection is a local treatment (UV chamber), which takes place as the water in the pool circulates through the chamber that contains the UV-C lamps. The accurate delivery of radiation (W UV-C) and residence time in the system ensure the effective neutralisation of 99.9% of microorganisms, as well as the reduction of chloramines to safe levels (<0.6 ppm).



### Heliox UV MP for public pools

Heliox UV MP (medium pressure) systems are designed to be used in public pools. These lamps operate over a wide spectrum to cover the whole of the UV region (see graph), which makes possible the effective eradication of chloramines (<0.6 ppm) in the pool water and its efficient disinfection due to the neutralisation of microorganisms (99.9%), including those resistant to chlorine treatment.

**NEW**

- More compact design (UV reactor in AISI-316).
- Adjustable to between 70 and 100% of rated power, in 1% increments, by means of a self-cooling electronic ballast.
- Fluidra technology (design and manufacturing).
- Calibrated UV-C radiation sensor (mW/cm$^2$). Precise dose control. Instant power adjustment to process conditions. Saves energy and extends the lamp's lifetime.
- Advanced colour touch screen. System menu for browsing process parameters and log files.
- All UV MP 50-->450 and UV MP 50AWP -> 450AWP models are built in compliance with UL NSF.



**Advanced versions:**

- Embedded web

The control architecture used in Heliox UV PM systems has a number of features that make them reliable, energy-efficient and scalable to the highest possible level.

The Heliox UV MP systems use two parameters for adjusting the power setting: average radiation and flow. All models have a rated radiation profile that ensures a dose of 60mJ/cm$^2$. If the flow is lower than the rated value, the same will apply to the required radiation level and the system reduces the power input, thus optimising power consumption and the lamp's lifetime. Likewise, if radiation drops due to losses caused by cloudy water, scaling or lamp emission efficiency, the system will adjust the power so that the right dose is supplied.

| | Code | Standard Pack | Standard Weight in kg | Standard Volume in m$^3$ |
|---|---|---|---|---|
| Heliox UV MP 50 | **52200** | 1 | - | - |
| Heliox UV MP 80 | **52201** | 1 | - | - |
| Heliox UV MP 140 | **52202** | 1 | - | - |
| Heliox UV MP 300 | **52203** | 1 | - | - |
| Heliox UV MP 450 | **52204** | 1 | - | - |
| Heliox UV MP 675 | **52205** | 1 | - | - |
| **Heliox UV MP Auto Wiper** | | | | |
| Heliox UV MP 50 W | **58808** | 1 | - | - |
| Heliox UV MP 80 W | **58809** | 1 | - | - |
| Heliox UV MP 140 W | **58698** | 1 | - | - |
| Heliox UV MP 300 W | **58810** | 1 | - | - |
| Heliox UV MP 450 W | **58699** | 1 | - | - |
| Heliox UV MP 675 W | **58811** | 1 | - | - |

For sea water application, contact with AstralPool

Technical specifications on the following page

# AUTOMATIC UV DISINFECTION

## Heliox System UV MP lamps





| | Code | Standard Pack | Standard Weight in kg | Standard Volume in m³ |
|---|---|---|---|---|
| Lamp UV MP 50/80 (Codes 52200, 52201, 58808, 58809) | **60638** | 1 | 0.125 | - |
| Lamp UV MP 140 (Codes 52202, 58698) | **60639** | 1 | 0.255 | - |
| Lamp UV MP 300/450/675 (Codes 52203, 52204, 52205, 58810, 58699, 58811) | **60642** | 1 | 0.275 | - |
| Quartz tube case MP 50/80/140 | **60643** | 1 | 0.050 | - |
| Quartz tube case MP 300/450/675 | **60644** | 1 | 0.050 | - |

## Heliox UV LP system for public pools

UV LP Inox and UV LP PE (LP = low pressure) systems are designed to be used in public pools. They act at a wavelength of 254 nm, which is ideal for eliminating microorganisms. They will enable you to benefit from the latest ultraviolet light technology in the field of water treatment.

**New features of LP S.S. & LP PE:**

Stainless steel and polyethylene versions.
Multi-lamp version.
Fluidra technology (design and manufacturing).
Lamp "ON" indicator.
Electronic counter for working time and ignitions (lamp lifetime control).
Flow switch included as standard.



## Heliox UV LP INOX

| | Code | Standard Pack | Standard Weight in kg | Standard Volume in m³ |
|---|---|---|---|---|
| **Heliox UV LP** | | | | |
| I45 inox 270 W / 90 W (UVC) | **60344** | 1 | - | - |
| I65 inox 360 W / 120 W (UVC) | **60345** | 1 | - | - |
| I85 inox 450 W / 150 W (UVC) | **60346** | 1 | - | - |
| I95 inox 540 W / 180 W (UVC) | **60347** | 1 | - | - |

## Heliox UV LP PE





| | Code | Standard Pack | Standard Weight in kg | Standard Volume in m³ |
|---|---|---|---|---|
| **Heliox UV LP** | | | | |
| P20EX PE 90 W / 30 W (UVC) | **63138** | 1 | - | - |
| P25EX PE 180 W / 60 W (UVC) | **63139** | 1 | - | - |
| P30EX PE 270 W / 90 W (UVC) | **63140** | 1 | - | - |
| P35 PE 270 W / 90 W (UVC) | **60348** | 1 | - | - |
| P45 PE 360 W / 120 W (UVC) | **60349** | 1 | - | - |
| P60 PE 450 W / 150 W (UVC) | **60354** | 1 | - | - |
| P70 PE 540 W / 180 W (UVC) | **60358** | 1 | - | - |
| P95 PE 680 W / 204 W (UVC) | **63135** | 1 | - | - |
| P140 PE 1020 W / 306 W (UVC) | **63136** | 1 | - | - |
| P180 PE 1360 W / 408 W (UVC) | **64347** | 1 | - | - |
| P220 PE 1700 W / 510 W (UVC) | **64348** | 1 | - | - |
| P260 PE 2040 W / 612 W (UVC) | **64349** | 1 | - | - |
| P300 PE 2380 W / 714 W (UVC) | **63137** | 1 | - | - |

## AUTOMATIC UV DISINFECTION

### Heliox UV LP system for public pools

| Material | Code | Model | Flow rate (35 mJ/cm²) Freshwater | Flow rate (35 mJ/cm²) Seawater | Flow rate (60 mJ/cm²) Freshwater | No. Lamps | Rated / UV-C power | Total height | Ø reactor |
|---|---|---|---|---|---|---|---|---|---|
| Stainless steel | **60344** | UV LP 45 | 45 m³/h | - | 22m³/h | 3X90 w | 90 UV-C (W) | 1092 | 204 |
| Stainless steel | **60345** | UV LP 65 | 65 m³/h | - | 30m³/h | 4X90 w | 120 UV-C (W) | 1092 | 204 |
| Stainless steel | **60346** | UV LP 85 | 85 m³/h | - | 37m³/h | 5X90 w | 150 UV-C (W) | 1092 | 204 |
| Stainless steel | **60347** | UV LP 95 | 95 m³/h | - | 43m³/h | 6X90 w | 180 UV-C (W) | 1092 | 204 |
| **PE** | **60348** | UV LP P35 | 35 m³/h | 26 m³/h | 18m³/h | 3X90 w | 90 UV-C (W) | 1020 | 250 |
| **PE** | **60349** | UV LP P45 | 45 m³/h | 33 m³/h | 22m³/h | 4X90 w | 120 UV-C (W) | 1020 | 250 |
| **PE** | **60354** | UV LP P60 | 60 m³/h | 45 m³/h | 30m³/h | 5X90 w | 150 UV-C (W) | 1020 | 250 |
| **PE** | **60358** | UV LP P70 | 70 m³/h | 53 m³/h | 35m³/h | 6X90 w | 180 UV-C (W) | 1020 | 250 |
| **PE** | **63138** | UV LP 20 EX | 20 m³/h | 15 m³/h | - | 1X90 w | 30 UV-C (W) | 950 | 200 |
| **PE** | **63139** | UV LP 25 EX | 25 m³/h | 19 m³/h | - | 2X90 w | 60 UV-C (W) | 950 | 200 |
| **PE** | **63140** | UV LP 30 EX | 30 m³/h | 23 m³/h | - | 3X90 w | 90 UV-C (W) | 950 | 200 |
| **PE** | **63135** | UV LP P95 | 101 m³/h | 62 m³/h | - | 2X340 w | 204 UV-C (W) | 1319 | 315 |
| **PE** | **63136** | UV LP P140 | 152 m³/h | 95 m³/h | - | 3X340 w | 306 UV-C (W) | 1319 | 315 |
| **PE** | **64347** | UV LP P180 | 198 m³/h | 113 m³/h | - | 4X340 w | 408 UV-C (W) | 1319 | 315 |
| **PE** | **64348** | UV LP P220 | 242 m³/h | 151 m³/h | - | 5X340 w | 510 UV-C (W) | 1319 | 315 |
| **PE** | **64349** | UV LP P260 | 283 m³/h | 179 m³/h | - | 6X340 w | 612 UV-C (W) | 1319 | 315 |
| **PE** | **63137** | UV LP P300 | 327 m³/h | 198 m³/h | - | 7X340 w | 714 UV-C (W) | 1319 | 315 |



### Heliox UV LP lamps





| | Code | Standard Pack | Standard Weight in kg | Standard Volume in m³ |
|---|---|---|---|---|
| 90-W UV LP-25 lamp (Codes 60344, 60345, 60347, 63138, 63139, 63140, 60348, 60349, 60354, 60358) | **60609** | 1 | - | - |
| UV LP-20/25/30 quartz (lamps 75 W and 90 W) | **60631** | 1 | - | - |
| 340 W UV LP lamp (Codes 63135, 63136, 64347, 64348, 34349, 63137) | **66062** | 1 | - | - |
| UV LP 1100MM quartz (Lamps 400 W) | **66063** | 1 | - | - |

+ info PDB
Further information on **PRODUCTS**
**www.astralpool.com**

# DOSING PUMPS





## Exactus membrane dosing pumps

All systems comply with EC regulations. IP-65 protection. Electrical connection: 220/240 V 50/60 Hz. Materials in contact with the liquid: Polypropylene, Viton, Teflon and PVC. Other valve models in different materials available on request. Includes anti-acid plastic housing. Touch sensitive moisture resistant indicator. Drainage valve included. Lubrication-free, minimal maintenance. On request, the unit can be supplied with outlet, level sensor or other operating voltages.

Available materials:

Pump head: PP, and available in PVDF and PTFE to order
Diaphragm: PTFE
Valves: FPM lip valve (Viton) and other elastomers such as EPDM (Dutral), NBR (nitrile) and silicone available to order. Ceramic ball valves available.
Connections: 4 x 6 mm

Installation kit included with all pumps: full suction filter (PP-FPM by Viton), injection valve ( PP-FPM by Viton), suction/return piping 2 m + 2 m PVC, 2-m PE distribution hose.

**EXACTUS PUMP PERFORMANCE CURVE**

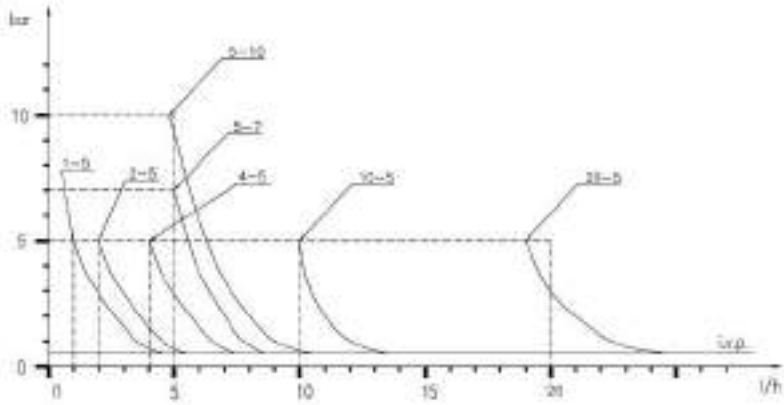




## Exactus manual analogue model

Electronic dosing pump for wall mounting or horizontal base. Manually regulated flow rate. Regulation range: 0-100% and 0-20%. Acid resistant plastic housing.

| | | Code | Standard Pack | Standard Weight in kg | Standard Volume in $m^3$ |
|---|---|---|---|---|---|
| Manual Analog | 2 l/h - 5 bar | **57153** | 1 | 4 | 0.005 |
| Manual Analog | 2 l/h - 10 bar | **57154** | 1 | 4 | 0.005 |
| Manual Analog | 5 l/h - 7 bar | **57155** | 1 | 4 | 0.005 |
| Manual Analog | 5 l/h - 10 bar | **57156** | 1 | 4 | 0.005 |
| Manual Analog | 10 l/h - 5 bar | **57157** | 1 | 4 | 0.005 |
| Manual Analog | 20 l/h - 5 bar | **57158** | 1 | 4 | 0.005 |

# DOSING PUMPS



## Exactus manual digital model

Electronic dosing pump for wall mounting or horizontal base. Manually regulated flow rate with digital control for injection frequency. 3 digit display. Regulation range: 0-100%, with a scale of 1%. Product ready to incorporate level sensor (not included). Acid resistant plastic housing.

| | | Code | Standard Pack | Standard Weight in kg | Standard Volume in $m^3$ |
|---|---|---|---|---|---|
| Manual Digital | 2 l/h - 5 bar | **57159** | 1 | 4 | 0.005 |
| Manual Digital | 5 l/h - 7 bar | **57160** | 1 | 4 | 0.005 |
| Manual Digital | 5 l/h - 10 bar | **57161** | 1 | 4 | 0.005 |
| Manual Digital | 10 l/h - 5 bar | **57162** | 1 | 4 | 0.005 |
| Manual Digital | 20 l/h - 5 bar | **57163** | 1 | 4 | 0.005 |



## Exactus Proportional model

Proportional pump controlled by the mA signal. The pump may be connected to a transmitter/indicator instrument or to another device that feeds in an intensity-modulated signal of 0 to 20mA. The frequency drive of the pump will be proportional to the mA signal received, i.e. the higher the signal, the greater the pump flow rate. The pump can be set to work in reverse mode, i.e. the higher the signal, the lower the flow rate. This model can be adapted for other mA rates (0-20mA, 4-20mA, 20-4mA). Product can incorporate a level sensor (sold separately)

| | Code | Standard Pack | Standard Weight in kg | Standard Volume in $m^3$ |
|---|---|---|---|---|
| Proportional (4-20mA) 5 l/h- 7 bar | **57164** | 1 | 4 | 0.005 |
| Proportional (4-20mA) 5 l/h- 10 bar | **57165** | 1 | 4 | 0.005 |
| Proportional (4-20mA) 10 l/h- 5 bar | **57166** | 1 | 4 | 0.005 |
| Proportional (4-20mA) 20 l/h- 5 bar | **57167** | 1 | 4 | 0.005 |



## Exactus pH / Rx model

Backlit LCD screen, ON / OFF or proportional operating modes, 0 ÷ 14 pH; -1000 ÷ 1400 mV, pH, RX (ORP) electrode inlet (10 Tera Ohm) (electrode not included), screen resolution: 0.01 pH; ± 1mV. Product can include a level sensor (not included).

| | Code | Standard Pack | Standard Weight in kg | Standard Volume in $m^3$ |
|---|---|---|---|---|
| pH / Rx 5 l/h - 7 bar | **57892** | 1 | 4 | 0.005 |
| pH / Rx 5 l/h - 10 bar | **57893** | 1 | 4 | 0.005 |
| pH / Rx 10 l/h - 5 bar | **57894** | 1 | 4 | 0.005 |



## Exactus Volumetric VFT model

Electronic dosing pump for mounting on base or wall. Proportional volumetric dosing pump that works from signals received from a flow meter. Can be operated in manual or automatic mode depending on the signals received. Product can incorporate a level sensor (sold separately)

| | Code | Standard Pack | Standard Weight in kg | Standard Volume in $m^3$ |
|---|---|---|---|---|
| Volumetric VFT 5 l/h - 7 bar | **57174** | 1 | 4 | 0.005 |
| Volumetric VFT 5 l/h - 10 bar | **57175** | 1 | 4 | 0.005 |
| Volumetric VFT 10 l/h - 5 bar | **57176** | 1 | 4 | 0.005 |
| Volumetric VFT 20 l/h - 5 bar | **57177** | 1 | 4 | 0.005 |

+ info
PDB
Further information on **PRODUCTS**
**www.astralpool.com**

# DOSING PUMPS



## pH sensor

5-metre pH sensor with plastic BNC connector.

| Code | Standard Pack | Standard Weight in kg | Standard Volume in $m^3$ |
|---|---|---|---|
| **21538** | 1 | 0.2 | 0.001 |



## RX sensor

5-metre RX sensor with plastic BNC connector.

| Code | Standard Pack | Standard Weight in kg | Standard Volume in $m^3$ |
|---|---|---|---|
| **21539** | 1 | 0.3 | 0.001 |



## pH sensor kit

Includes pH sensor, buffer solutions, sensor holder, level sensor. For Exactus.

| Code | Standard Pack | Standard Weight in kg | Standard Volume in $m^3$ |
|---|---|---|---|
| **56122** | 1 | - | - |



## RX sensor kit

Includes RX sensor, buffer solutions, sensor holder, level sensor. For Exactus.

| Code | Standard Pack | Standard Weight in kg | Standard Volume in $m^3$ |
|---|---|---|---|
| **56124** | 1 | - | - |



## CL sensor

For CL Exactus model.

| Code | Standard Pack | Standard Weight in kg | Standard Volume in $m^3$ |
|---|---|---|---|
| **45896** | 1 | - | - |



## Sensor holder for chamber

| Code | Standard Pack | Standard Weight in kg | Standard Volume in $m^3$ |
|---|---|---|---|
| **01305** | 1 | 0.3 | 0.001 |



## Sensor holder (pressure)

For working with pressure.

| Code | Standard Pack | Standard Weight in kg | Standard Volume in $m^3$ |
|---|---|---|---|
| **01306** | 1 | 0.3 | 0.001 |

# DOSING PUMPS

## OPTIMA dosing pump

The OPTIMA dosing pump represents the development of more than 30 years of experience in the automatic dosing field. This new series reduces the number of pumps required to meet the various dosing needs.

The OPTIMA dosing pump series, with its new power supply technology from 90, VCA to 265 VCA and at 50-60 Hz, ensures a precision and reliability never seen before.

Integration of many functions due to its simple programming, an alphanumeric display, the possibility of multilingual programming of the menu and a new technology which permit controlled flow rate and back pressure. Allows to use the same model for various applications providing a great versatility.

Systems manufactured in compliance with EC standards. IP5 protection. 90-265V AC 50/60 Hz power supply. Components in contact with chemicals are made of polypropylene, Viton, Teflon and PVC. (Other materials are available if made to order.) Acid-resistant casing. Moisture-resistant membrane push buttons. Built-in purge valve. No lubrication and little maintenance work required. Sensors and calibration solutions not included. Also available with a peristaltic pump (see page 555).

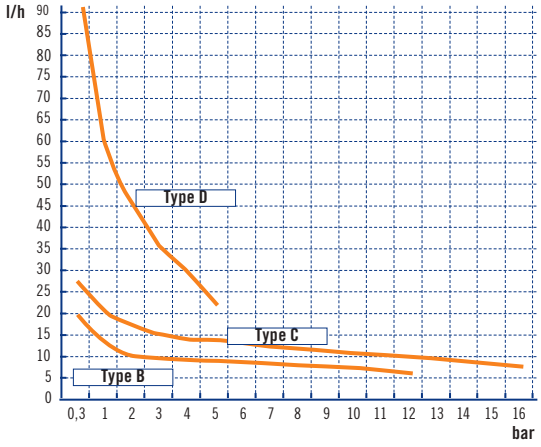


| Sensors |  | | | |
|---|---|---|---|---|
| pH sensor with calibration solutions (Code: 36004) | ● | | ● | |
| Redox sensor with calibration solutions (Code: 36005) | | ● | | ● |





## OPTIMA constant flow rate analogue dosing pump

In OPTIMA constant flow rate analogue dosing pumps, the flow rate can be set as a percentage using the potentiometer under the front panel, which modifies the pump's operation frequency.
The pumps in this range have an level inlet sensor.

**Double scale adjustment: the maximum dosing frequency can be divided into 5. This double scale allows users to have two pumps with a single unit.**

Power supply from 90 to 230 VCA at 50-60 Hz with plug and switch.

| | Code | Standard Pack | Standard Weight in kg | Standard Volume in $m^3$ |
|---|---|---|---|---|
| **Adjustable manual Optima pump** | | | | |
| B-type pump of5–10 bar and 2–5 l/h | **57132** | 1 | 3.5 | 0.01 |
| C-type pump of 5 bar and 10 l/h | **57133** | 1 | 4.5 | 0.01 |
| D-type pump of 5 bar and 120 l/h | **57135** | 1 | 4.5 | 0.01 |



## OPTIMA NEXT constant flow rate analogue dosing pump

The flow rate is fully adjustable from the flow meter. Power supply from 90 to 230 VCA at 50-60 Hz without plug.

| | Code | Standard Pack | Standard Weight in kg | Standard Volume in $m^3$ |
|---|---|---|---|---|
| Adjustable Optima manual pump at 8 bar and 5 l/h | **66164** | 1 | - | - |

+ info
PDB
Further information on **PRODUCTS**
**www.astralpool.com**

# DOSING PUMPS



## OPTIMA proportional and volumetric dosing pump

OPTIMA pumps provide all the functions of proportional dosing in a single model.

**Features:**
- Proportional with analogue signals 4 - 20 mA.
- Proportional with digital signals and the possibility of:
  - Multiplying the input impulses (1:n)
  - Dividing the input impulses (n:1)
  - Function in ppm
  - The pump has a memory function for processing input impulses dosing
- Level alarm with pump disconnection.
- Maximum dosing flow rate to prevent overdosing.
- Password for protecting programmed data
- Possibility of alarm connection
- Power supply from 90 to 265 VCA at 50-60 Hz with plug

| | Code | Standard Pack | Standard Weight in kg | Standard Volume in $m^3$ |
|---|---|---|---|---|
| Type B Model 7-10 bar and 5 litres | **57136** | 1 | 3.5 | 0.01 |
| Type C Model 5 bar and 10 litres | **57137** | 1 | 4.5 | 0.01 |
| Type D Model 5 bar and 20 litres | **57138** | 1 | 4.5 | 0.01 |



## OPTIMA NEXT proportional and volumetric dosing pump

OPTIMA pumps provide all the functions of proportional dosing in a single model.

**Features:**
- Proportional with analogue signals 4 - 20 mA.
- Reading of pulses/minute.
- Chemical product minimum level inlet.
- pulse entry for dosing proportional from pulse emitter counter
- Remote start/stop
- Power supply from 90 to 265 VCA at 50-60 Hz without plug

| | Code | Standard Pack | Standard Weight in kg | Standard Volume in $m^3$ |
|---|---|---|---|---|
| Model 8 bar and 5 litres | **66165** | 1 | - | - |



## OPTIMA PLUS dosing pump with pH or redox tester

OPTIMA dosing pump with built-in pH/Redox control. pH/Redox instrument.
Automatic calibration: Calibration by simply pressing a button, with the possibility of controlling the level of sensor efficiency.

**Features:**
- 90-265 VAC 50/60 Hz power supply
- Manual temperature compensation for pH or optionally automatic via Pt100.
- 4...20mA output for printed register or transmission of the reading.
- Level alarm with pump disconnection or simple warning of lack of product by means of the alarm relay.
- Alarm notifying deactivation of the programmable setpoint across whole of the measurement range.
- Dosing delay time to stop the dosing pump from injecting product in event of poor sensor operation.
- Maximum dosing pump flow rate for preventing overdosing.
- Password for protecting programmed data
- Possibility of alarm connection

| | Code | Standard Pack | Standard Weight in kg | Standard Volume in $m^3$ |
|---|---|---|---|---|
| **Type C** Optima Redox/pH control dosing pump (10 bar and 5 l/h and 5 bar and 10 l/h) | **66179** | 1 | 4.5 | 0.01 |
| Optional | | | | |
| PT100 sensor | **66758** | - | - | - |
| Flange for PT100 | **66759** | - | - | - |

COMPATIBLE NN thing
*Fluidra Connect compatible*

**Sensor not included. Sensor holder not included (code 01306)**

# DOSING PUMPS



Sensor not included.
Sensor holder not included (code 01306)

## OPTIMA NEXT dosing pump with pH or redox tester

OPTIMA dosing pump with built-in pH/Redox control instrument.
Automatic calibration by simply pressing a button, with the possibility of controlling the degree of sensor efficiency.

**Features:**
- Power supply from 90 to 265 VCA at 50-60 Hz without plug
- Manual temperature adjustment for pH or optional automatic adjustment with PT100 (sensor not included).
- Level control input.
- Remote off control.

| | Code | Standard Pack | Standard Weight in kg | Standard Volume in m³ |
|---|---|---|---|---|
| Optima Next dosing pump redox control/pH control at 8 bar and 5 l/h | **66166** | 1 | - | - |



## Bracket for mounting above tank

Optional bracket for mounting the OPTIMA series and pH Basic Plus in a horizontal position, for example on top of a chemical products tank.

| Code | Standard Pack | Standard Weight in kg | Standard Volume in m³ |
|---|---|---|---|
| **36830** | 1 | 0.1 | 0.002 |



## Peristaltic dosing pumps

90/260V 50/60 Hz electrical connection.

**The installation kit includes:**
- Transparent glass-type flexible 2-m PVC suction pipe.
- Semi-rigid white polyethylene 2-m return pipe.
- 3/8" BSP m. injection valve.
- Pool floor filter.

| | Code | Standard Pack | Standard Weight in kg | Standard Volume in m³ |
|---|---|---|---|---|
| Peristaltic pump 4 l/h (3 bar) | **57179** | 1 | - | - |
| Peristaltic pump 12 l/h (1 bar) | **57178** | 1 | - | - |



## Polyethylene cylindrical tanks

To hold chemicals for dosage pumps.

| | Code | Standard Pack | Standard Weight in kg | Standard Volume in m³ |
|---|---|---|---|---|
| Capacity: 125 l | **01314** | 1 | 4.5 | 0.120 |
| Capacity: 250 l | **01315** | 1 | 10.0 | 0.390 |
| Capacity: 350 l | **01316** | 1 | 14.0 | 0.510 |
| Capacity: 500 l | **01317** | 1 | 21.5 | 0.760 |
| Capacity: 1000 l | **28831** | 1 | - | - |



## Manual stirrer

For Polyethylene tanks.

| | Code | Standard Pack | Standard Weight in kg | Standard Volume in m³ |
|---|---|---|---|---|
| Length 60 cm | **01318** | 1 | 0.5 | 0.010 |
| Length 90 cm | **01319** | 1 | 1.2 | 0.020 |

+ info
PDB
Further information on **PRODUCTS**
**www.astralpool.com**

## CONTINUOUS FLOCCULATION SYSTEM



### Floc System

Automation flocculant dosing adjustable flow water pools. Includes: adjustable pump from 151 $cm^3$/h until 1.5 l/h, injector valve, bottom filter, suction and return tube.

| Code | Standard Pack | Standard Weight in kg | Standard Volume in $m^3$ |
|---|---|---|---|
| **54528** | 1 | 1 | 0.0044 |

## WATER METERS



### Woltman type turbine meters

Woltman type axial turbine water meter, with numerical counter readout, and numbered drums. Dry dial with magnetic transmission. Easily removable gearwork and turbine. Pre-set for pulse emission. IP-68 protection level. CYBLE type pulse emission.

| | Code | Standard Pack | Standard Weight in kg | Standard Volume in $m^3$ |
|---|---|---|---|---|
| 2" gauge - 50 mm | **20430** | 1 | 12.0 | 0.004 |
| 2½" gauge - 65 mm | **20431** | 1 | 13.6 | 0.004 |
| 3" gauge - 80 mm | **20432** | 1 | 14.6 | 0.004 |
| 4" gauge - 100 mm | **20433** | 1 | 20.0 | 0.006 |
| 5" gauge - 125 mm | **20434** | 1 | 30.0 | - |
| 6" gauge - 150 mm | **20435** | 1 | 36.0 | 0.009 |
| 8" gauge - 200 mm | **20436** | 1 | 55.0 | 0.012 |
| CYBLE type emitter K= 1 l/pulse | **23235** | 1 | - | - |
| CYBLE type emitter K= 10 l/pulse | **23235-0010** | 1 | - | - |
| CYBLE type emitter K= 100 l/pulse | **23235-0100** | 1 | - | - |

## AUTOMATIC REGULATION AND CONTROL EQUIPMENT

60359



60361



60362



COMPATIBLE NN thing
*Fluidra Connect compatible*




### AP PR-200 - Compatible Electrolysis

The expert's choice for dosing control. The built-in panels based on Series AP PR controllers provide the best solution for the plug & play devices pre-assembled on the panel. There are several versions for the control of the water's pH, ORP and FREE CHLORINE levels.

AP PR-200 equipment is compatible with the Easy Salt, ProChlore Salt and Neolysis ranges

This is also the recommended solution for experts whenever several chlorination systems must be controlled at the same time from a single control and regulation panel (multiple control through the TIP kit).

| | Code | Standard Pack | Standard Weight in kg | Standard Volume in $m^3$ |
|---|---|---|---|---|
| AP PR-206 pH/ORP | **60359** | 1 | - | - |
| AP PR-207 pH/Cl2 PPM* | **60361** | 1 | - | - |
| AP PR-204 Cl2 PPM* | **60362** | 1 | - | - |
| AP PR-204 pH/ORP + integrated TRI KIT* | **60359-KIT TRI** | 1 | - | - |
| AP PR-207 pH/Cl2 PPM + integrated TRI KIT* | **60361-KIT TRI** | 1 | - | - |
| AP PR-204 Cl2 PPM + integrated TRI KIT* | **60362-KIT TRI** | 1 | - | - |
| ECC1S Electrolyte / free chlorine sensor gel (seawater) | **64658** | 1 | - | - |
| Optional: TRI kit, 3-unit simultaneous control | **70338** | 1 | - | - |

*** Models with Cl2 ppm: seawater can be used by substituting the gel electrolyte supplied with the standard unit for the gel electrolyte specifically for seawater (code 64658), which must be ordered separately.**

# AUTOMATIC REGULATION AND CONTROL EQUIPMENT

## Control Connect: The smart multi-setting controller

*Fluidra Connect compatible*

A range of multi-setting control panels with colour touchscreen. Easy and efficient control of water sanitation. Fully automated pool water treatment.

- Multi-function TFT colour touchscreen.
- 4 programmable timer relays and 4 digital inputs
- Poolstation (Ethernet as standard).
- Fluidra Connect Compatible.

| | Code | Standard Pack | Standard Weight in kg | Standard Volume in $m^3$ |
|---|---|---|---|---|
| pH / ORP / Temp. with in-line sensor holder | **71537** | 1 | 5.85 | - |
| pH / ORP / Temp. with panel sensor holder | **71538** | 1 | 6.85 | - |
| pH / Cl (ppm) Temp. with panel sensor holder | **71539** | 1 | 6.85 | - |



**71537**



**71538**



**71539**



## Amperometric Chlorine Sensors



**60645**



**60646**



**60647**

| | Code | Standard Pack | Standard Weight in kg | Standard Volume in $m^3$ |
|---|---|---|---|---|
| Free Chlorine Sensor | **60645** | 1 | 0.22 | - |
| ECC1 Electrolyte / Gel for Organic Chlorine Sensor | **60646** | 1 | 0.07 | - |
| Membrane for CL.01.02 Inorganic Chlorine Sensor | **60647** | 1 | 0.02 | - |
| ECC1S Electrolyte / free chlorine sensor gel (Salt water). | **64658** | 1 | 0.02 | - |

## pH / ORP Sensors



**60648**



**60649**

| | Code | Standard Pack | Standard Weight in kg | Standard Volume in $m^3$ |
|---|---|---|---|---|
| pH combined sensor | **60648** | 1 | 0.20 | - |
| ORP sensor | **60649** | 1 | 0.20 | - |

+ info
PDB
Further information on **PRODUCTS**
**www.astralpool.com**

# AUTOMATIC REGULATION AND CONTROL EQUIPMENT



**60618** **60632** **60633**

## Calibration Solutions

| | Code | Standard Pack | Standard Weight in kg | Standard Volume in m³ |
|---|---|---|---|---|
| Buffer solution pH 7.0 - 50 mL (Green) | **60618** | 1 | 0.053 | - |
| Buffer solution pH 4.0 - 50 mL (Red) | **60632** | 1 | 0.058 | - |
| Calibration solution 470 mV - 50 mL | **60633** | 1 | 0.060 | - |



## Pool Patrol

The Colorimetric controller unit gives a reply to the demand of the Swimming Pool Market requiring compact, easy and low maintenance device, with IP65 enclosure. The available measures are: Free Chlorine (DPD1), pH, Redox (ORP), Temperature. Thanks to its internal graphic display it is possible to have all measures displayed at the same time. The Plastic Cover assures an easy accessibility to the hydraulic part. Includes: Measuring instrument, flow detector by temperature, pH sensor, ORP sensor, pH calibration solutions, ORP calibration solutions and DPD2 bottle.

| | Code | Standard Pack | Standard Weight in kg | Standard Volume in m³ |
|---|---|---|---|---|
| Pool Patrol | **54527** | 1 | - | - |



## Controller

The panels in the CONTROLLER range are fully equipped and assembled systems. They are therefore ideal for use in water treatment.
Their simple, compact design makes installation and start-up extremely easy.
They come with all of the components and accessories required for rapid assembly. All assemblies are made of PVC sheets, in various sizes depending on the model.

COMPATIBLE NN thing
*Fluidra Connect compatible*

**General technical features**

- Range of available sizes depending of the sensor selected.
- Range available for free chlorine: 0-2, 0-5 0-10, 0-20 and 0-200 ppm.
- pH range: 0–14.
- ORP range: +/-1500 mV.
- Temperature range: 0–50ºC.
- Measurement of stable chlorine with low pH dependence.
- Self-calibration of all sizes.
- Alarm signal if water flow is insufficient.
- Instrument with IP65 protection rating.
- 250 V-10 A relays for connecting dosing pumps or salt chlorinators.
- 4-20 mA analogue outlets with repeat signal or manifold for proportional pumps.
- Power supply: 230 V / 50 Hz.
- Setpoints and programmable alarms.
- Pump pause function during calibration and for stopping flow.
- Temperature readings and readjustment (automatic with PT100 sensor included).
- Three types of setpoint settings. On/Off, Proportional in Time and Proportional by Pulses.
- RS485 communications port.

**Components included in the assembly:**

- Methacrylate sensor holder, with flow regulator, sample taking valve and flow sensor.
- Filter holder and 80 micron filter cartridge for water inlet.
- DPD calibration standard solutions.
- Assembly accessories, and instruction and installation manual.
- Sensors depending on version.

| | Code | Standard Pack | Standard Weight in kg | Standard Volume in m³ |
|---|---|---|---|---|
| Controller pH / Redox | **66178** | 1 | - | - |
| Controller pH / Free Chlorine | **66177** | 1 | - | - |
| Controller pH / ORP / Free Chlorine | **66176** | 1 | - | - |
| Controller Free Chlorine | **66175** | 1 | - | - |
| pH/Amperometric-free chlorine sensor | **66168** | 1 | - | - |
| pH/ORP/Amperometric free chlorine sensor | **66169** | 1 | - | - |
| Controller pH / ORP / Free Chlorine / Total amperometric chlorine | **66170** | 1 | - | - |

## AUTOMATIC REGULATION AND CONTROL EQUIPMENT

### Installation diagram for organic Chlorine or Bromine

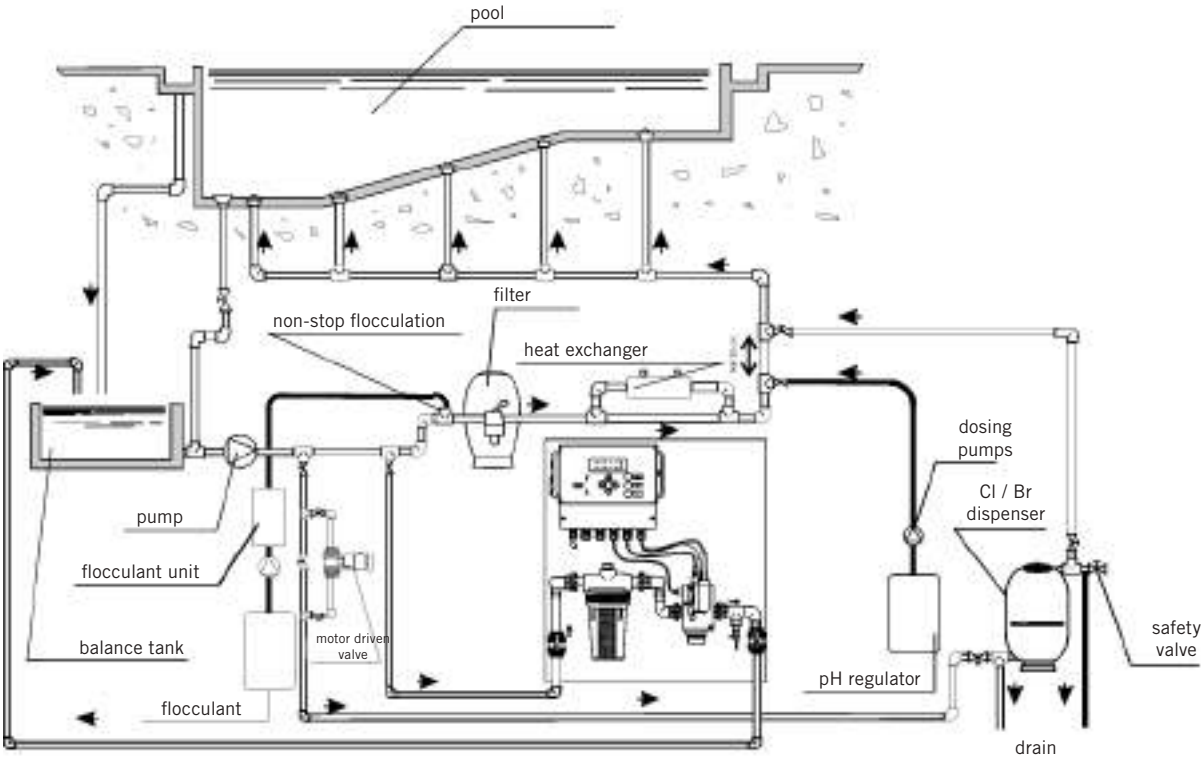


### Installation diagram for Inorganic Chlorine

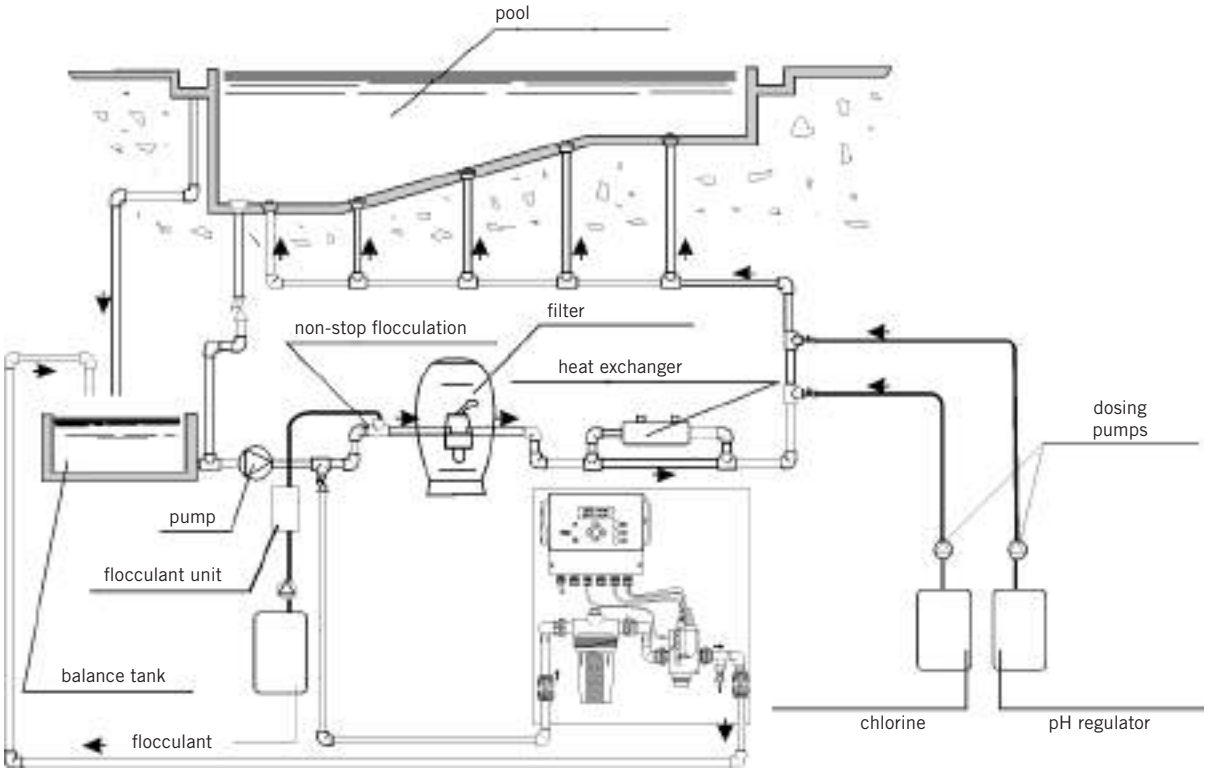





# COMMERCIAL POOLS
# CLEANING EQUIPMENT

562 • Automatic pool cleaners for public pools
564 • Pool cleaner accessories



ASTRALPOOL



## AUTOMATIC POOL CLEANERS FOR PUBLIC POOLS



### Ultra 125

Pool cleaner for public pools up to 15 m. Cleans bottom, walls and water line in a 3-hour program. Gyroscope build-in ensures total coverage of the pool floor. It has 23 m of cable and high-quality DC brushless motors (1 pump motor and 1 drive motor). The pump unit provides a flow rate of 19 m³/h. Two-year warranty.

| | Code | Standard Pack | Standard Weight in kg | Standard Volume in m³ |
|---|---|---|---|---|
| Ultra 125 suction cleaner | **60165** | 1 | - | - |

**Cleaning**
Bottom, walls and water line

**Pool size**
Up to 15 m length and 100 m²

**Cleaning cycle**
3 H

**Cable**
23 m



### Ultra 250

Pool cleaner for public pools up to 25 m. Cleans bottom, walls and water line. Gyroscope build-in ensures total coverage of the pool floor. Has three programs: 3 h (floor only), 4 h (floor and wall) and 5 h (floor and wall). Program start can be delayed. Has a cleaning level selector. Includes a remote control, 30 metres of cable and a caddy. Fitted with 3 high-quality DC brushless motors, the pump unit provides a suction rate of 19 m³/h. Two-year warranty.

| | Code | Standard Pack | Standard Weight in kg | Standard Volume in m³ |
|---|---|---|---|---|
| Ultra 250 suction cleaner | **60140** | 1 | - | - |

**Cleaning**
Bottom, walls and water line

**Pool size**
Up to 25 m length and 165 m²

**Cleaning cycle**
3 h (floor) – 4/5 h (floor + walls)

**Cable**
30 m







# AUTOMATIC POOL CLEANERS FOR PUBLIC POOLS












## Ultra 500

Pool cleaner Ultra 500 for commercial pools up to 25 m. Cleans the floor. With a gyroscope build in ensures the total coverage of the pool surface. It has three different programs: 3 h (floor only), 4 h (floor and wall), 5 h (floor and wall). Remote control, 30 meters of cable and a caddy. It has 3 high quality DC brushless motors. The pump capacity is 22 m³/h. A LED indicator that shows when the filter has to be cleaned. It has 36 months of warranty.

| | Code | Standard Pack | Standard Weight in kg | Standard Volume in m³ |
|---|---|---|---|---|
| Ultra 500 suction cleaner | **66015** | 1 | - | - |

**Cleaning**
**Floor and walls but not water line**

**Pool size**
**Up to 25 m length and 165 m²**

**Cleaning cycle**
**3 H (bottom) / 4 / 5 H (bottom + walls)**

**Cable**
**30 m**














## Ultramax Gyro

Pool cleaner specially designed for public pools up to 50 m. The unit is manufactured in resistant materials for the most demanding applications. Gyroscope build-in ensures total coverage of the pool floor. It includes a programmable power pack with different cleaning programs, a remote control, 36 / 45 m of cable and a stainless steel caddy. Fitted with 4 high-quality brushless DC motors, the pump's 2 motors give it a suction rate of 40m³/h and the possibility of setting program length (3 to 6 hours) and delaying start time.

| | Code | Standard Pack | Standard Weight in kg | Standard Volume in m³ |
|---|---|---|---|---|
| Ultramax Gyro suction cleaner with 36 m cable | **72687** | 1 | - | - |
| Ultramax Gyro suction cleaner with 45 m cable | **62268** | 1 | - | - |

**Cleaning**
**Only bottom**

**Pool size**
**Up to 50 m length**

**Cleaning cycle**
**3 to 6 H**

**Cable**
**36 m / 45 m**



## POOL CLEANER ACCESSORIES



### Pump caddy for stand-alone pool cleaners

Made of anodized aluminium tube and a 460 mm x 370 mm plastic platform. Face plate in AISI-304 stainless steel.

| Code | Standard Pack | Standard Weight in kg | Standard Volume in $m^3$ |
|---|---|---|---|
| **04648** | 1 | 8.06 | 0.12 |



# COMMERCIAL POOLS
# SPAS AND SAUNAS


566 • Professional range
566 • Colour chart for spas
566 • Optional equipment
567 • In-ground overflow commercial spas
574 • Stainless steel public spas with overflow channel
576 • Stainless steel public spas
577 • Compact filtration for spas
578 • Complements for spas
580 • Liner accessories
584 • Pool Jet accessories
585 • Accessories for minispas
586 • Electrical accessories for spas / mini spas
587 • Air blowers
589 • Saunas

## PROFESSIONAL RANGE



**COMMERCIAL SPAS WITH OVERFLOW CHANNEL AND COMPACT UNITS**

Spas designed for commercial spaces, gyms, wellness centres, hotels... A wide range of options and finishes that cover all needs.

Spas with both an acrylic and mosaic tile finish.

## COLOUR CHART FOR SPAS



N° 44 WHITE | N° 46 BLUE MARBLE | N° 59 STERLING | N° 64 PEARL SHADOW | N° 72 PEARL CAMEO | N° 27 SILVER | N° 18 SAND

## OPTIONAL EQUIPMENT

### Chromotherapy LED spotlight, for public spas only



The Mini LED spotlight is the best option for lighting public spas. Thanks to the high intensity LEDs, lighting is similar to that attained with conventional lamps.

The range of LumiPlus Mini 2.0 projectors has a multitude of possible colour combinations and sequences with higher light intensity and better energy efficiency, which result in an 80% saving on electricity consumption compared with conventional projectors, as well as 100,000 hours of useful life time without the need for maintenance.

Chromotherapy LED spotlight option

*We reserve the right to change, wholly or partially, the features of our products and the contents of this document, without prior notice*

## IN-GROUND OVERFLOW COMMERCIAL SPAS

### Comparison of models with an overflow channel

| |  |  |  |  |  |  |  |  |
|---|---|---|---|---|---|---|---|---|
| **MODELS** | **Roma** | **Verona** | **Wellmax** | **Tokyo 70** | **Olympia** | **Odisea 20** | **Casiopea** | **Formentera** |
| | **40769** | **70550** | **43638** | **53990** | **26440** | **45709** | **04007** | **16413** |
| Size cm (± 2 cm) | Ø 300 | 228 x 228 | 460 x 281 | 340 x 240 | 379 x 249 | Ø 230 | 225 x 225 | 218 x 199 |
| Positions (Seats / Loungers) | 9 (9 / -) | 5 (3 / 2) | 7 (5 / 2) | 7 (6 / 1) | 11 (11 / -) | 5 (5 / -) | 4 (4 / -) | 4 (4 / -) |
| Water capacity (litres) | 2,290 l | 1,200 l | 2,940 l | 2,200 l | 2,490 l | 1,120 l | 782 l | 959 l |
| Spa weight Empty | 310 Kg | 147 Kg | 508 kg | 373 kg | 373 kg | 163 kg | 143 kg | 250 kg |
| Spa weight Full | 2,600 Kg | 1,347 Kg | 3,448 kg | 2,573 kg | 2,863 kg | 1,283 kg | 925 kg | 1,209 kg |
| Acrylic | • | • | • | • | • | • | • | • |
| Colours | 44 / 46 / 59 | All | 44 / 46 / 59 | 44 / 46 / 59 | 44 / 46 / 59 | All | All | All |
| No of jets | 18 | 24 | 53 | 58 | 16 | 8 | 4 | 12 |
| No of air nozzles | 18 | 12 | 10 | 21 | 20 | 10 | 7 | 28 |
| Headrests | - | - | 2 | 2 | - | - | - | 4 |
| Piezoelectric press buttons | 2 | 2 | 4 | 3 | 2 | 2 | 2 | 2 |
| High resistance metallic structure | • | • | • | • | • | • | • | • |
| Projector | • | • | • | • | • | • | • | • |
| Chromotherapy | Op. 1 LED | Op. 1 LED | 2 LEDs | 4 LEDs | Op. 1 LED | Op. 1 LED | Op. 1 LED | Op. 1 LED |
| Isothermal cover | Op. | Op. | Op. | Op. | Op. | Op. | Op. | Op. |
| Recommended compact kit | Kit 75 2M | Kit 50 or 75 | Kit 75 3M | Kit 75 3M | Kit 75 2M | Kit 50 or 75 | Kit 50 or 75 | Kit 75 2M |

| |  |  |  |  |  |  |  |  |
|---|---|---|---|---|---|---|---|---|
| **MODELS** | **Mirage 40** | **Lake** | **Vulcano** | **Mercurio** | **Minerva** New | **Venus** New | **Neptuno** New | **Zeus** New |
| | **44630** | **56537** | **71469** | **71470** | **71472** | **71471** | **71473** | **71474** |
| Size cm (± 2 cm) | Ø 250 | 379 x 249 | Ø 230 | 268 x 230 | 205 x 205 | 211 x 211 | 254 x 220 | 408 x 210 |
| Positions (Seats / Loungers) | 6 (6 / -) | 11 (11 / -) | 6 (6 / -) | 4 (2 / 2) | 4 (2 / 2) | 4 (4 / 4) | 5 (5 / -) | 7 (5 / 2) |
| Water capacity (litres) | 1,410 l | 2,490 l | 1,300 l | 2,000 l | 1,200 l | 1,230 l | 1,200 l | 2,650 l |
| Spa weight Empty | 353 kg | 373 kg | 350 kg | 500 kg | 650 kg | 325 kg | 400 kg | 650 Kg |
| Spa weight Full | 1,763 kg | 2,863 kg | 1,650 kg | 2,000 kg | 1,850 kg | 1,560 kg | 1,600 kg | 3,300 Kg |
| Mosaic | • | • | - | - | - | - | - | |
| Colours | All | All | Stainless steel | | Stainless steel | | | |
| No of jets | 26 | 16 | 12 | 12 | 28 | 20 | 23 | 25 |
| No of air nozzles | 12 | 20 | Equiv. to 15 nozzles | Equiv. to 32 nozzles | 28 | 16 | 20 | 62 |
| Headrests | - | - | - | • | 2 | 2 | - | • |
| Piezoelectric press buttons | 2 | 2 | • | • | 2 | 2 | 2 | 3 |
| High resistance metallic structure | • | • | • | • | • | • | • | • |
| Projector | • | • | • | • | 5 | 4 | 3 | 2 |
| Chromotherapy | Op. 1 LED | Op. 1 LED | as standard | as standard | as standard | as standard | as standard | as standard |
| Isothermal cover | Op. | Op. | Op. | Op. | Op. | - | Op. | Op. |
| Recommended compact kit | Kit 75 2M | Kit 75 2M | Kit 75 | Kit 75 | 16412 | 05135 | 16412 | Send inquiry |

We reserve the right to change, wholly or partially, the features of our products and the contents of this document, without prior notice

## IN-GROUND OVERFLOW COMMERCIAL SPAS

### Roma - Code 40769



COLOUR: BLUE MARBLE (46)



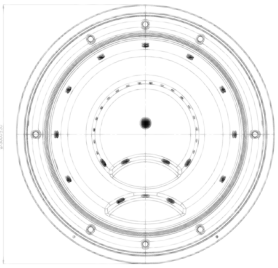

| TECHNICAL SHEET | |
|---|---|
| Size in cm (± 2cm) | Ø 300 cm |
| Positions (Seats / Loungers) | 9 (9 / -) |
| Jets + blower nozzles | 18 + 18 |
| Recommended compact kit | Kit 75 2M |

| Description | Code |
|---|---|
| ROMA + Light | **40769SE001** |
| ROMA + Light + Cover | **40769SE006** |

Spa cover and balance tank sold separately.
See section "Spa accessories".

**Fully fitted with overflow channel, main drain, filtering, hydromassage and blower nozzles, hydromassage buttons and overflow grating. Balance tank not included.**

### Verona - Code 70550



WHITE COLOUR (44)



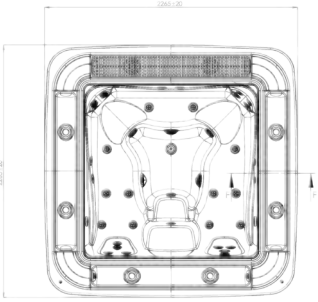

| TECHNICAL SHEET | |
|---|---|
| Size in cm (± 2cm) | 228 x 228 cm |
| Positions (Seats / Loungers) | 5 (3 / 2) |
| Jets + blower nozzles | 24 + 12 |
| Recommended compact kit | Kit 50 or 75 |

| Description | Code |
|---|---|
| VERONA + Light | **70550SE001** |
| VERONA + Light + Cover | **70550SE006** |

Spa cover and balance tank sold separately.
See section "Spa accessories".

**Fully fitted with overflow channel, main drain, filtering, hydromassage and blower nozzles, hydromassage buttons and overflow grating. Balance tank not included.**

*We reserve the right to change, wholly or partially, the features of our products and the contents of this document, without prior notice*

## IN-GROUND OVERFLOW COMMERCIAL SPAS

### Wellmax - Code 43638



WHITE COLOUR (44)

| TECHNICAL SHEET | |
|---|---|
| Size in cm (± 2cm) | 460 x 281 cm |
| Positions (Seats / Loungers) | 7 (5 / 2) |
| Jets + nozzles | 53 + 10 |
| Recommended compact kit | Kit 75 3M - Code 43639 |

Available colours: White / Blue Marble.

| Description | Code |
|---|---|
| WELLMAX Jet Inox + high density colour LED + Stainless steel handrails | **43638SP315** |
| WELLMAX Jet Inox + high density colour LED + Stainless steel handrails + Cover | **43638SP316** |

**Spa cover and balance tank sold separately.**
**See section "Spa accessories".**

**Fully fitted with overflow channel, main drain, filtering, hydromassage and blower nozzles, hydromassage buttons and overflow grating. Balance tank not included.**





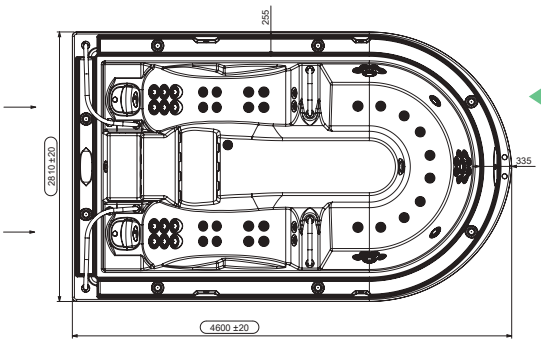




*We reserve the right to change, wholly or partially, the features of our products and the contents of this document, without prior notice*

## IN-GROUND OVERFLOW COMMERCIAL SPAS

### Tokyo 70 - Code 53990



WHITE COLOUR (44)



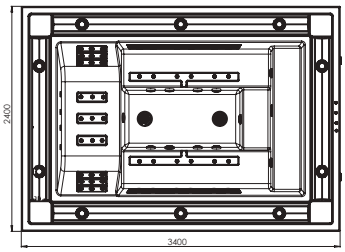


| TECHNICAL SHEET | |
|---|---|
| Dimensions in cm (± 2cm) | 340 x 240 cm |
| Positions (Seats / Loungers) | 7 (6 / 1) |
| Jets + nozzles | 58 + 21 |
| Recommended compact kit | Kit 75 3M - Code 43639 |

Available colours: White / Blue Marble.

| Description | Code |
|---|---|
| TOKYO 70 + Light | **53990SE315** |
| TOKYO 70 + Light + Cover | **53990SE316** |
| TOKYO 70 Plus + Light + Cascade | **53993SE315** |
| TOKYO 70 Plus + Light + Cascade + Cover | **53993SE316** |

**Spa cover and balance tank sold separately. See section "Spa accessories".**

**Fully fitted with overflow channel, main drain, filtering, hydromassage and blower nozzles, hydromassage buttons and overflow grating. Balance tank not included.**



*We reserve the right to change, wholly or partially, the features of our products and the contents of this document, without prior notice*

## IN-GROUND OVERFLOW COMMERCIAL SPAS

### Olympia - Code 26440



BLUE MARBLE COLOUR (46)



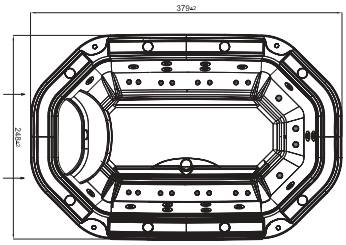


| TECHNICAL SHEET | |
|---|---|
| Size in cm (± 2cm) | 379 x 249 cm |
| Positions (Seats / Loungers) | 11 (11 / -) |
| Jets + nozzles | 16 + 20 |
| Recommended compact kit | Kit 75 2M - Code 16412 |

This Spa is only available in colours 44 and 46.

| Description | Code |
|---|---|
| OLYMPIA + Light | **26440SE001** |
| OLYMPIA + Light + Cover | **26440SE006** |

**Spa cover and balance tank sold separately.**
**See section "Spa accessories".**

**Fully fitted with overflow channel, main drain, filtering, hydromassage and blower nozzles, hydromassage buttons and overflow grating. Balance tank not included.**

### Odisea 20 - Code 45709



White COLOUR (44)



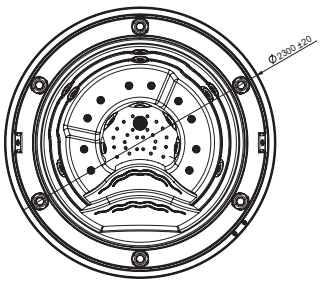


| TECHNICAL SHEET | |
|---|---|
| Size in cm (± 2cm) | Ø 230 cm |
| Positions (Seats / Loungers) | 5 (5 / -) |
| Jets + nozzles | 8 + 10 |
| Recommended compact kit | Kit 50 - Code 04015 / Kit 75 - Code 05135 |

| Description | Code |
|---|---|
| ODISEA 20 + Light | **45709SP001** |
| ODISEA 20 + Light + Cover | **45709SP006** |

**Spa cover and balance tank sold separately.**
**See section "Spa accessories".**

**Fully fitted with overflow channel, main drain, filtering, hydromassage and blower nozzles, hydromassage buttons and overflow grating. Balance tank not included.**



*We reserve the right to change, wholly or partially, the features of our products and the contents of this document, without prior notice*

## IN-GROUND OVERFLOW COMMERCIAL SPAS

### Casiopea - Code 04007



BLUE MARBLE COLOUR (46)

| TECHNICAL SHEET | |
|---|---|
| Dimensions in cm (± 2cm) | 225 x 225 cm |
| Positions (Seats / Loungers) | 4 (4 / -) |
| Jets + nozzles | 4 + 7 |
| Recommended compact kit | Kit 50 - Code 04015 / Kit 75 - Code 05135 |



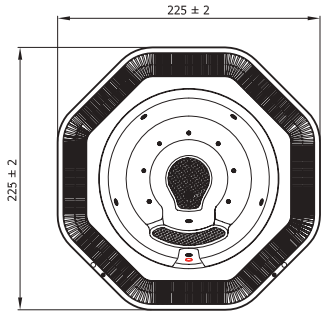


| Description | Code |
|---|---|
| CASIOPEA + Light | **04007SE001** |
| CASIOPEA + Light + Cover | **04007SE006** |

**Spa cover and balance tank sold separately.**
**See section "Spa accessories".**

**Fully fitted with overflow channel, main drain, filtering, hydromassage and blower nozzles, hydromassage buttons and overflow grating. Balance tank not included.**

### Formentera - Code 16413



PEARL SHADOW COLOUR (64)

| TECHNICAL SHEET | |
|---|---|
| Size in cm (± 2cm) | 218 x 199 cm |
| Positions (Seats / Loungers) | 4 (4 / -) |
| Jets + nozzles | 12 + 28 |
| Recommended compact kit | Kit 75 2M - Code 16412 |



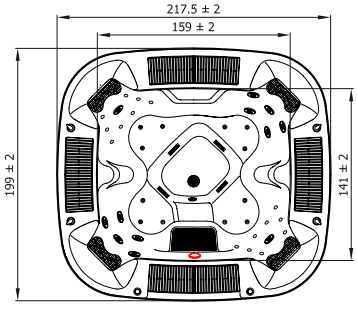


| Description | Code |
|---|---|
| FORMENTERA + Light | **16413SE001** |
| FORMENTERA + Light + Cover | **16413SE006** |

**Spa cover and balance tank sold separately.**
**See section "Spa accessories".**

**Fully fitted with overflow channel, main drain, filtering, hydromassage and blower nozzles, hydromassage buttons and overflow grating. Balance tank not included.**

*We reserve the right to change, wholly or partially, the features of our products and the contents of this document, without prior notice*

## IN-GROUND OVERFLOW COMMERCIAL SPAS

### Mirage 40 - Code 44630

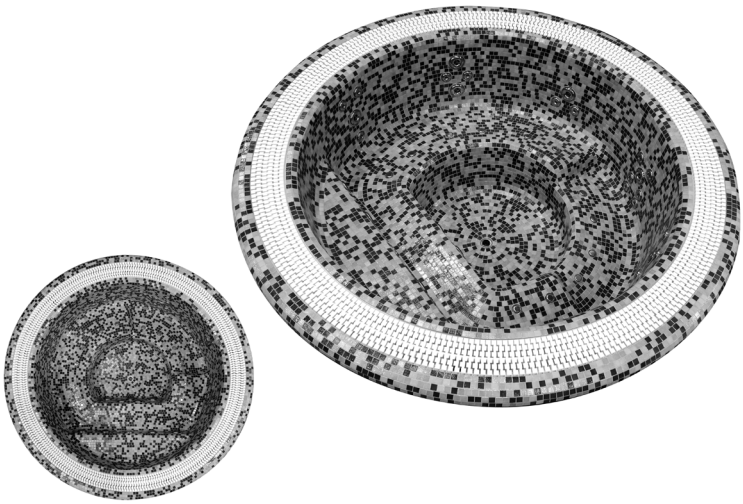

| TECHNICAL SHEET | |
|---|---|
| Size in cm (± 2cm) | Ø 250 cm |
| Positions (Seats / Loungers) | 6 (6 / -) |
| Jets + nozzles | 26 + 12 |
| Recommended compact kit | Kit 75 2M - Code 16412 |

Available colours:

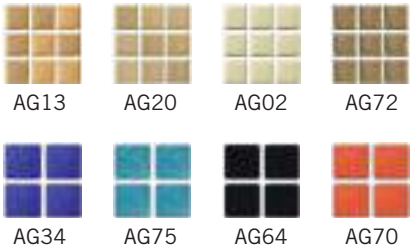


| Description | Code |
|---|---|
| MIRAGE 40 + Stainless steel jets + Colour LEDs + press buttons | **44630SP315** |
| MIRAGE 40 + Stainless steel jets + Colour LEDs + press buttons + Cover | **44630SP316** |

**Spa cover and balance tank sold separately.**
**See section "Spa accessories".**

**Fully fitted with overflow channel, main drain, filtering, hydromassage and blower nozzles, hydromassage buttons and overflow grating. Balance tank not included.**

### Lake 40 - Code 56537



| TECHNICAL SHEET | |
|---|---|
| Size in cm (± 2cm) | 379 x 249 cm |
| Positions (Seats / Loungers) | 11 (11 / -) |
| Jets + nozzles | 16 + 20 |
| Recommended compact kit | Kit 75 2M - Code 16412 |

Available colours:

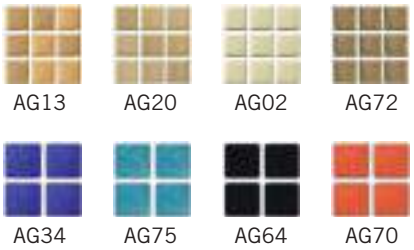


| Description | Code |
|---|---|
| LAKE 40 + Stainless steel jets + Colour LEDs + press buttons | **56537SE315** |
| LAKE 40 + Stainless steel jets + Colour LEDs + press buttons + Cover | **56537SE316** |

**Spa cover and balance tank sold separately.**
**See section "Spa accessories".**

**Fully fitted with overflow channel, main drain, filtering, hydromassage and blower nozzles, hydromassage buttons and overflow grating. Balance tank not included.**

*We reserve the right to change, wholly or partially, the features of our products and the contents of this document, without prior notice*

## STAINLESS STEEL PUBLIC SPAS WITH OVERFLOW CHANNEL

### Vulcano - Code 71469





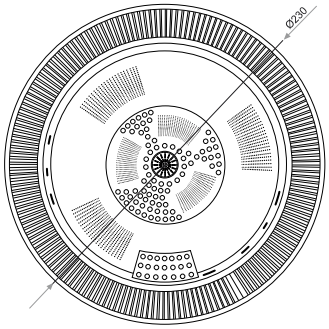


| TECHNICAL SHEET | |
|---|---|
| Dimensions in cm (± 1cm) | Ø 230 x 90 |
| Positions (Seats / Loungers) | 6 (6 / -) |
| Jets + nozzles | 12 + 15 |
| Recommended compact kit | Kit 75 - Code 05135 |

| Description | Code |
|---|---|
| VULCANO circular stainless steel SPA + Spotlight | **71469** |

**Spa cover and balance tank sold separately.**
**See section "Spa accessories".**

**Equipped with overflow channel, main drain, hydromassage push buttons, and filtration, hydromassage and blower nozzles. Buffer tank not included.**

### Mercurio - Code 71470





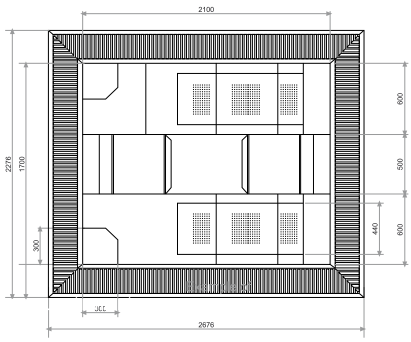


| TECHNICAL SHEET | |
|---|---|
| Dimensions in cm (± 1cm) | 268 x 230 x 90 |
| Positions (Seats / Loungers) | 4 (2 / 2) |
| Jets + nozzles | 12 + 29 |
| Recommended compact kit | Kit 75 - Code 05135 |

| Description | Code |
|---|---|
| MERCURIO Rectangular Stainless steel SPA + Spotlight | **71470** |

**Spa cover and balance tank sold separately.**
**See section "Spa accessories".**

**Equipped with overflow channel, main drain, hydromassage push buttons, and filtration, hydromassage and blower nozzles. Buffer tank not included.**

Ask for your new **Spa & Pool INOX SOLUTION** catalogue by AstralPool

## STAINLESS STEEL PUBLIC SPAS WITH OVERFLOW CHANNEL

### Minerva - Code 71472

New



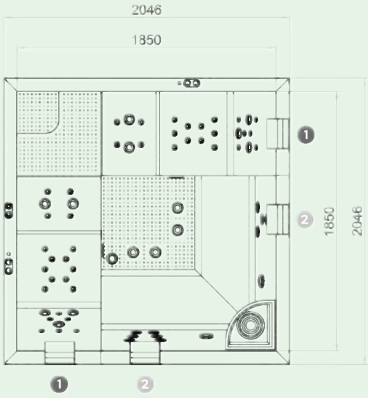


| TECHNICAL SHEET | |
|---|---|
| Dimensions in cm (± 1cm) | 205 x 205 x 90,5 |
| Positions (Seats / Loungers) | 4 (2 / 2) |
| Jets + nozzles | 2 + 29 |
| Recommended compact kit | Kit 75 - Code 05135 |

| Description | Code |
|---|---|
| MINERVA Design Stainless steel SPA + Spotlight | **71472** |

Spa cover and balance tank sold separately.
See section "Spa accessories".

Equipped with overflow channel, main drain, hydromassage push buttons, and filtration, hydromassage and blower nozzles. Buffer tank not included.

### Venus - Code 71471

New

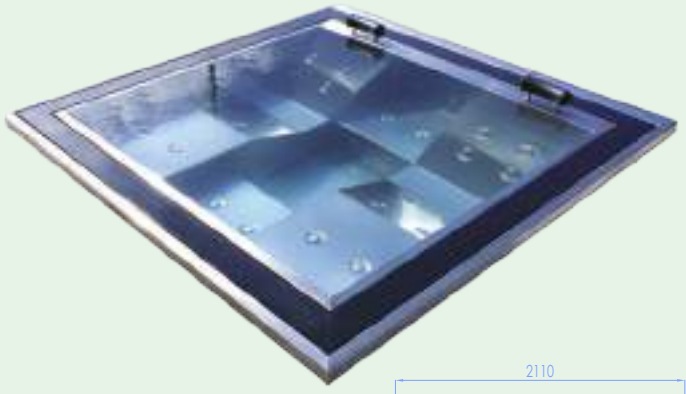



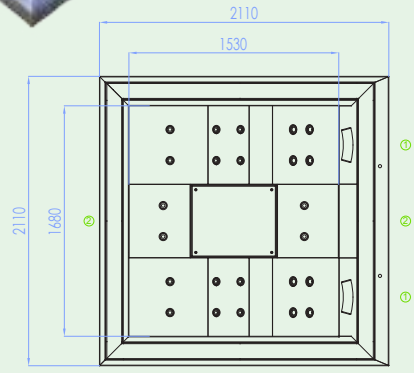


| TECHNICAL SHEET | |
|---|---|
| Dimensions in cm (± 1cm) | 211 x 211 x 90 |
| Positions (Seats / Loungers) | 4 (4 / 4) |
| Jets + nozzles | 20 + 16 |
| Recommended compact kit | Kit 75 - Code 05135 |

| Description | Code |
|---|---|
| VENUS Rectangular Stainless steel SPA + Spotlight | **71471** |

Spa cover and balance tank sold separately.
See section "Spa accessories".

Equipped with overflow channel, main drain, hydromassage push buttons, and filtration, hydromassage and blower nozzles. Buffer tank not included.

Ask for your new **Spa & Pool INOX SOLUTION** catalogue by AstralPool



## STAINLESS STEEL PUBLIC SPAS

### Neptuno - Code 71473

New



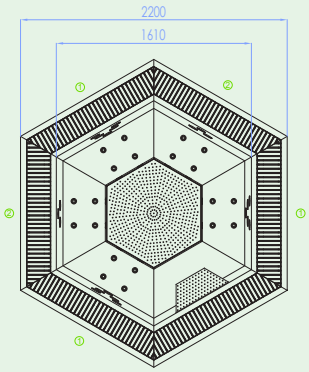


| TECHNICAL SHEET | |
|---|---|
| Dimensions in cm (± 1cm) | 254 x 220 x 100 |
| Positions (Seats / Loungers) | 5 (5 / -) |
| Jets + nozzles | 23 + 20 |
| Recommended compact kit | 16412 |

| Description | Code |
|---|---|
| NEPTUNO Design Stainless steel SPA + Spotlight | **71473** |

Spa cover and balance tank sold separately.
See section "Spa accessories".

Equipped with overflow channel, main drain, hydromassage push buttons, and filtration, hydromassage and blower nozzles. Buffer tank not included.

### Zeus - Code 71474

New



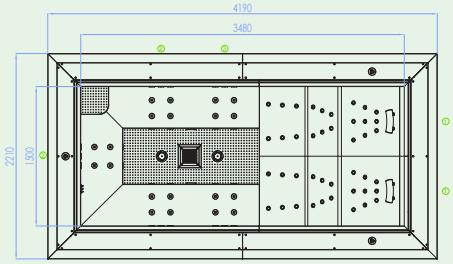


| TECHNICAL SHEET | |
|---|---|
| Dimensions in cm (± 1cm) | 348 x 150 x 98 |
| Positions (Seats / Loungers) | 7 (5 / 2) |
| Jets + nozzles | 25 + 62 |
| Recommended compact kit | Send inquiry |

| Description | Code |
|---|---|
| ZEUS Rectangular Stainless steel SPA + Spotlight | **71474** |

Spa cover and balance tank sold separately.
See section "Spa accessories".

Equipped with overflow channel, main drain, hydromassage push buttons, and filtration, hydromassage and blower nozzles. Buffer tank not included.

Ask for your new **Spa & Pool INOX SOLUTION** catalogue by AstralPool



## COMPACT FILTRATION FOR SPAS

### Compact kits for public use



16412



04015

Preassembled for filtering, heating and massage.
All kits are fitted with the electronic control cabinet operated using piezoelectric switches.

| | 04015CE000 | 04015CE001 | 04015CE004 | 05135CE000 | 05135CE001 | 05135CE004 | 16412CE000 | 16412CE001 | 16412CE004 | 43639CE001 | 43639CE004 |
|---|---|---|---|---|---|---|---|---|---|---|---|
| **Spa Model** | Casiopea, Odisea 20, Verona | | | Casiopea, Odisea 20, Verona | | | Formentera, Roma, Olympia, Mirage 40 | | | Wellmax, Tokyo 70 | |
| **Compact weight (with assembly)** | 114 kg | | | 94 kg | | | 116 kg | | | 134 kg | |
| **Filter weight (with assembly)** | Included | | | 85 kg | | | 85 kg | | | 85 kg | |
| **Assembly volume compact kit** | 1.39 $m^3$ | | | 1.39 $m^3$ | | | 1.39 $m^3$ | | | 1.39 $m^3$ | |
| **Volume with filter** | - | | | 0.83 $m^3$ | | | 0.83 $m^3$ | | | 0.83 $m^3$ | |
| **Filter Ø** | Ø 500 mm | | | Ø 650 mm | | | Ø 650 mm | | | Ø 650 mm | |
| **Filter pump** | 0.60 kW | | | 0.82 kW | | | 0.82 kW | | | 0.82 kW | |
| **Filter pump flow rate** | 10000 l/h | | | 11000 l/h | | | 11000 l/h | | | 11000 l/h | |
| **Massage pump** | 1.40 kW | | | 1.40 kW | | | 2 x 1.81 kW | | | 2 x 1.81 kW + 1 x 2.70 kW | |
| **Blower pump** | 1.3 kW | | | 1.3 kW | | | 1.3 kW | | | 1.3 kW | |
| **Electric heater** | 6 kW | | - | 6 kW | | - | 6 kW | | - | 6 kW | - |
| **Voltage** | 400 AC III + N | | | 400 AC III + N | | | 400 AC III + N | | | 400 AC III + N | |
| **Power requirements** | 9362 W (18.1 A) | | 3350 W (5.6 A) | 9582 W (19.2 A) | | 3570W (6 A) | 11802 W (23 A) | | 5790 W (9.7 A) | 14485 W (27.5 A) | 8473 W (14.2 A) |
| **Kit size without assembly (PrxAnxAl)** | 1160 x 1000 x 1200 mm | | | 1160 x 1000 x 1200 mm | | | 1160 x 1000 x 1200 mm | | | 1160 x 1000 x 1200 mm | |
| **Ozone** | | • | | | • | | | • | | • | |
| **Water-water exchanger 20 kW** | | | • | | | • | | | • | | • |



*We reserve the right to change, wholly or partially, the features of our products and the contents of this document, without prior notice*

# COMPLEMENTS FOR SPAS



## Covers for spas



Canvas cover for the Wellmax Spa

| | Code | Standard Pack | Standard Weight in kg | Standard Volume in m³ |
|---|---|---|---|---|
| ODISEA 20 / Infinity spa cover | **45721** | 1 | 20 | 0.25 |
| CASIOPEA spa cover | **23195** | 1 | 15 | 0.25 |
| FORMENTERA spa cover | **28297** | 1 | 17 | 0.58 |
| VENECIA spa cover | **23198** | 1 | 16 | 0.32 |
| COLISEUM spa cover | **28298** | 1 | 18 | 0.86 |
| OLYMPIA spa cover | **43817** | 1 | 15 | 0.44 |
| MIRAGE spa cover | **41892** | 1 | 15 | 0.44 |
| WELLMAX spa cover | **43729** | 1 | 15 | 0.35 |
| TOKYO spa cover | **54184** | 1 | - | - |
| New VERONA spa cover | **71994** | 1 | 18 | 0,86 |
| ROMA spa cover | **62402** | 1 | 18 | 0,86 |



## Cover Stand

Metal Stand for simple handling of the cover.

| Code | Standard Pack | Standard Weight in kg | Standard Volume in m³ |
|---|---|---|---|
| **28462** | 1 | 10 | 0.118 |

## Spa access steps

| | Code | Standard Pack | Standard Weight in kg | Standard Volume in m³ |
|---|---|---|---|---|
| Synthetic wood staircase in Graphite | **42002CL0K** | 1 | 15 | 0.09 |
| Basic staircase coastal grey | **60194** | 1 | 5 | 0.07 |
| Swimspa staircase | **56918CL01** | 1 | 35 | 0.59 |
| Synthetic wood staircase in Thunder | **42002CL0R** | 1 | 15 | 0.09 |
| Synthetic wood staircase in Creek | **42002CL0T** | 1 | 15 | 0.09 |
| New Synthetic wood staircase in Butterfly | **42002CL0W** | 1 | 15 | 0.09 |



**42002CL0K**



**60194**



**56918CL01**

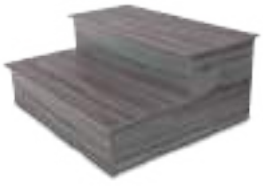

**42002CL0R**



**42002CL0T**

## COMPLEMENTS FOR SPAS



### Spa parasol in Cameo with LED

| | Code | Standard Pack | Standard Weight in kg | Standard Volume in $m^3$ |
|---|---|---|---|---|
| Spa parasol in Cameo with LED | **60220** | 2 | 15 | 2 |



### Portable spa handrail holder

| | Code | Standard Pack | Standard Weight in kg | Standard Volume in $m^3$ |
|---|---|---|---|---|
| Portable spa handrail holder | **60226** | 2 | 8 | 0.95 |



### Spa filter cartridge cleaner

| | Code | Standard Pack | Standard Weight in kg | Standard Volume in $m^3$ |
|---|---|---|---|---|
| Spa filter cartridge cleaner | **60197** | 1 | 2 | 0.04 |



### Polyester balance tank

Used for collecting water volume displaced in overflow channel of commercial spas

| | Code | Standard Pack | Standard Weight in kg | Standard Volume in $m^3$ |
|---|---|---|---|---|
| 1000 litres capacity (162 x 122 x 83 cm) | **11372** | 1 | 10.0 | 1.75 |
| 2000 litres capacity (204 x 160 x 75 cm) | **27865** | 1 | 15.0 | 3.81 |



### PE balance tank

1000 litres capacity. Used for collecting water volume displaced in overflow channel of commercial spas.

| | Code | Standard Pack | Standard Weight in kg | Standard Volume in $m^3$ |
|---|---|---|---|---|
| 158 x 92 x 95 cm | **17144** | 1 | 10.0 | 1.75 |

Different compensation vessel capacities depending on model:

| Code | Balance tank | Spa model |
|---|---|---|
| **11372** | 1000 litre polyester tank | Casiopea, Formentera, Venecia, Coliseum, Odisea 20, Mirage 40 |
| **17144** | 1000 litre polyethylene tank | |
| **27865** | 2000 litre polyester tank | Olympia, Wellmax, Casiopea, Formentera, Venecia, Coliseum, Odisea 20, Mirage 40 |

## LINER ACCESSORIES



### 2 ½" adjustable jet

Regulates proportion of air-water outlet. 50 mm diameter water inlet and 32 mm air inlet. Flow: 4 m³/hour. Pressure 0.8 a.t.m.

| Code | Standard Pack | Standard Weight in kg | Standard Volume in m³ |
|---|---|---|---|
| **32641** | 12 | 7.625 | 0.028 |



### 2" threaded jet

Water inlet diameter of 50 mm and air inlet diameter of 32 mm. Flow rate of 4 m³/hour. Atm pressure of 0.8.

| Code | Standard Pack | Standard Weight in kg | Standard Volume in m³ |
|---|---|---|---|
| **33586** | 12 | 7.625 | 0.028 |



### 2" jet thread for liner

Water inlet diameter of 50 mm and air inlet diameter of 32 mm. Flow rate of 4 m³/hour Atm pressure of 0.8.

| Code | Standard Pack | Standard Weight in kg | Standard Volume in m³ |
|---|---|---|---|
| **70532** | 12 | 7.625 | 0.028 |



### 2" main drain

With elbow for gluing to Ø 50 mm pipe.

| Code | Standard Pack | Standard Weight in kg | Standard Volume in m³ |
|---|---|---|---|
| **04042** | 15 | 4.8 | 0.028 |



### Adjustable air inlet

1"for air regulation to Venturi system for jet function.

| Code | Standard Pack | Standard Weight in kg | Standard Volume in m³ |
|---|---|---|---|
| **04045** | 25 | 6.0 | 0.028 |



### Adjustable silent air inlet

Silent venturi for jet air flow control. Air intake is through embedded part. Attaches to air distributor code 33937.

| Code | Standard Pack | Standard Weight in kg | Standard Volume in m³ |
|---|---|---|---|
| **33938** | 25 | 8.5 | 0.028 |

## LINER ACCESSORIES



### 5 outlet air distributor for venturi

5 outlet air distributor for gluing to venturi with code 33938. Outlets for clamping a flexible hosepipe of 10 mm inner diameter.

| Code | Standard Pack | Standard Weight in kg | Standard Volume in $m^3$ |
|---|---|---|---|
| **33937** | 25 | 8.5 | 0.028 |



### 6 outlet air distributor for venturi

6 outlet air distributor to attach to pipes with a 10 mm inner diameter and glue to 15 mm pipes.

| Code | Standard Pack | Standard Weight in kg | Standard Volume in $m^3$ |
|---|---|---|---|
| **33936** | 25 | 8.5 | 0.028 |



### 10 outlet air distributor

10 outlet air distributor to attach to pipes with a 10 mm inner diameter and glue to 50 mm pipes.

| Code | Standard Pack | Standard Weight in kg | Standard Volume in $m^3$ |
|---|---|---|---|
| **35346** | 25 | 8.5 | 0.028 |



### 4 water outlet manifold

Manifold for gluing to 50 mm pipe, 4 outlets for clamping a hosepipe of 20 mm inner diameter.

| Code | Standard Pack | Standard Weight in kg | Standard Volume in $m^3$ |
|---|---|---|---|
| **33934** | 25 | 8.5 | 0.028 |



### 8 water outlet manifold

Manifold for gluing to 50 mm pipe, 8 outlets for clamping a hosepipe of 20 mm inner diameter.

| Code | Standard Pack | Standard Weight in kg | Standard Volume in $m^3$ |
|---|---|---|---|
| **33935** | 25 | 8.5 | 0.028 |



### Threaded blower nozzle

For air distribution into the SPA from the blowers. Flow rate 5.4 to 7.5 $m^3/h$.

| | Code | Standard Pack | Standard Weight in kg | Standard Volume in $m^3$ |
|---|---|---|---|---|
| White plastic front panel | **27602** | 80 | 1.6 | 0.03 |
| Stainless steel front panel | **43440** | 80 | 1.6 | 0.03 |

# LINER ACCESSORIES



## Blower nozzle for gluing

For air distribution into the SPA from the blowers. Flow rate 5.4 to 7.5 m³/h.

| | Code | Standard Pack | Standard Weight in kg | Standard Volume in m³ |
|---|---|---|---|---|
| White plastic front panel | **28460** | 80 | 1.6 | 0.03 |
| Stainless steel front panel | **43441** | 80 | 1.6 | 0.03 |



## Blower nozzle lateral outlet 3/8"

For air distribution into the SPA from the blowers. Flow rate 5.4 to 7.5 m³/h.

| | Code | Standard Pack | Standard Weight in kg | Standard Volume in m³ |
|---|---|---|---|---|
| White plastic front panel | **34318** | 80 | 1.6 | 0.03 |
| Stainless steel front panel | **43442** | 80 | 1.6 | 0.03 |



## 2" return unit

For return line and massage.

| Code | Standard Pack | Standard Weight in kg | Standard Volume in m³ |
|---|---|---|---|
| **04034** | 25 | 5.0 | 0.028 |



## Adjustable air impulsion inlet

For air distribution by means of the blowers. Maximum flow rate 18 m³/h.

| Code | Standard Pack | Standard Weight in kg | Standard Volume in m³ |
|---|---|---|---|
| **49818** | 12 | 4.24 | 0.021 |

**09667** **04047**



**04048**

## Pneumatic push button

For starting and stopping massage and hydromassage functions.

| | Code | Standard Pack | Standard Weight in kg | Standard Volume in m³ |
|---|---|---|---|---|
| For max. 15 m | **04047** | 20 | 0.5 | 0.028 |
| For max. 7 m simple | **04048** | 40 | 1.6 | 0.028 |
| For max. 7 m simple, with thread | **09667** | 20 | 0.5 | 0.028 |

## Plastic tube

For pneumatic signal from press button to switch. Inner Ø 3.5 mm.

| Code | Standard Pack | Standard Weight in kg | Standard Volume in m³ |
|---|---|---|---|
| **04054** | 50 | 3.33 | 0.006 |

## LINER ACCESSORIES



### Rotating jet

Flow rate 2 to 2.5 m³/h.

| Code | Standard Pack | Standard Weight in kg | Standard Volume in m³ |
|---|---|---|---|
| **20297** | 25 | 3.33 | 0.028 |



### Twin rotating jet

Flow rate 2 to 2.5 m³/h.

| Code | Standard Pack | Standard Weight in kg | Standard Volume in m³ |
|---|---|---|---|
| **20296** | 25 | 3.83 | 0.028 |



### Rotating jet housing

| Code | Standard Pack | Standard Weight in kg | Standard Volume in m³ |
|---|---|---|---|
| **20299** | 15 | 3.33 | 0.028 |



### Jet housing for linear pool

| Code | Standard Pack | Standard Weight in kg | Standard Volume in m³ |
|---|---|---|---|
| **63144** | 12 | 3.33 | 0.028 |



### Moveable tube jet nozzle to install in substitution of a fixed one

Compatible with codes 20295 and 20299. Flow rate 2 to 2.5 m³/h.

| Code | Standard Pack | Standard Weight in kg | Standard Volume in m³ |
|---|---|---|---|
| **20298** | 1 | 0.8 | 0.001 |



### 2 ½" wall conduit for rotating jet

Made up of: The jet body, 20 cm wall conduit, niche, threaded fitting, front body. Jet not included.
Flow rate 5 m³/h at 1 bar.

| Code | Standard Pack | Standard Weight in kg | Standard Volume in m³ |
|---|---|---|---|
| **20295** | 4 | 4 | 0.018 |

Stainless steel accessories should not be used in pools with salt electrolysis systems

# POOL JET ACCESSORIES

**Pool Jet accessories are designed for pools that have a hydromassage section .**



## Pool Jet 1 Directional Jet

Flow rate 2.4 to 3.6 m³/h. Accessories compatible with 2½" handrail for Pool Jet.

| | Code | Standard Pack | Standard Weight in kg | Standard Volume in m³ |
|---|---|---|---|---|
| Stainless steel finish* | **63148** | 25 | 3.83 | 0.028 |
| White finish | **63149** | 25 | 3.83 | 0.028 |



## Pool Jet 1 Rotating Jet

Flow rate 2.4 to 3.6 m³/h. Accessories compatible with 2½" handrail for Pool Jet.

| | Code | Standard Pack | Standard Weight in kg | Standard Volume in m³ |
|---|---|---|---|---|
| Stainless steel finish* | **63150** | 25 | 3.83 | 0.028 |
| White finish | **63151** | 25 | 3.83 | 0.028 |



## Pool Jet 2 Rotating Jets

Flow rate 2.4 to 3.6 m³/h. Accessories compatible with 2½" handrail for Pool Jet.

| | Code | Standard Pack | Standard Weight in kg | Standard Volume in m³ |
|---|---|---|---|---|
| Stainless steel finish* | **63152** | 25 | 3.83 | 0.028 |
| White finish | **63153** | 25 | 3.83 | 0.028 |



## Pool Jet Rotating Beehive

Flow rate 2.4 to 3.6 m³/h. Accessories compatible with 2½" handrail for Pool Jet.

| | Code | Standard Pack | Standard Weight in kg | Standard Volume in m³ |
|---|---|---|---|---|
| Stainless steel finish* | **63154** | 25 | 3.83 | 0.028 |
| White finish | **63155** | 25 | 3.83 | 0.028 |



## Wall conduit for Pool Jet

Made up of: The jet Straight body (20 mm Air x 32 mm Water), 20 cm wall conduit, niche, front body. Jet not included.

| | Code | Standard Pack | Standard Weight in kg | Standard Volume in m³ |
|---|---|---|---|---|
| Wall conduit for Pool Jet | **63146** | 4 | 4 | 0.018 |

Chrome accessories suitable only for baths that use no chemical treatment. Not suitable for pools.

# ACCESSORIES FOR MINISPAS



## 1 ½" main drain

With elbow for gluing Ø 50 mm pipe.

| | Code | Standard Pack | Standard Weight in kg | Standard Volume in m³ |
|---|---|---|---|---|
| Chrome-plated bronze front panel | **04104** | 3 | 7.5 | 0.028 |



## Adjustable air inlet

¾" to control air massage to Venturi system for jet function

| | Code | Standard Pack | Standard Weight in kg | Standard Volume in m³ |
|---|---|---|---|---|
| Chrome-plated bronze front panel | **04108** | 10 | 9.0 | 0.028 |
| White plastic front panel | **04110** | 10 | 3.0 | 0.028 |



## Pneumatic push button

For starting and stopping massage and hydromassage functions.

| | Code | Standard Pack | Standard Weight in kg | Standard Volume in m³ |
|---|---|---|---|---|
| Chrome-plated bronze front panel | **04111** | 10 | 6.0 | 0.028 |
| White plastic front panel | **04113** | 12 | 6.0 | 0.028 |



## Blower Inlet

For minispa air distribution from the blower. 1 ½" thread.

| | Code | Standard Pack | Standard Weight in kg | Standard Volume in m³ |
|---|---|---|---|---|
| Chrome-plated bronze front panel | **04114** | 20 | 7.5 | 0.028 |



## 1 ¼" jet with adaptor to water return

Jet with adaptor to return water to pipe. Also adaptor to connect to water return and air circulation pipe, solvent for inner Ø 32 mm, directional.

| | Code | Standard Pack | Standard Weight in kg | Standard Volume in m³ |
|---|---|---|---|---|
| Chrome-plated bronze front panel | **04095** | 8 | 12.0 | 0.028 |
| White plastic front panel | **04097** | 12 | 12.0 | 0.028 |



## 1¼" jet

With adaptor to connect to return water pipe and Venturi to glue to Ø 32 mm pipe, directional.

| | Code | Standard Pack | Standard Weight in kg | Standard Volume in m³ |
|---|---|---|---|---|
| Chrome-plated bronze front panel | **04092** | 8 | 10.0 | 0.028 |
| White plastic front panel | **04094** | 24 | 5.0 | 0.028 |



## 1 ¼" return inlet

| | Code | Standard Pack | Standard Weight in kg | Standard Volume in m³ |
|---|---|---|---|---|
| Built in chrome brass | **04100** | 4 | 15.0 | 0.028 |
| Built in white plastic | **04103** | 12 | 3.5 | 0.028 |

## ELECTRICAL ACCESSORIES FOR SPAS / MINI SPAS



### Programmable digital thermostat

To operate ON/OFF contactor.

| Code | Standard Pack | Standard Weight in kg | Standard Volume in $m^3$ |
|---|---|---|---|
| **11288** | 20 | 0.5 | 0.003 |



### Electric press button

230 V 50 Hz.

| Code | Standard Pack | Standard Weight in kg | Standard Volume in $m^3$ |
|---|---|---|---|
| **33387** | 1 | 1.5 | 0.003 |



### Electropneumatic equipment

With two switches. Up to 1.47 kW (2HP).

| Code | Standard Pack | Standard Weight in kg | Standard Volume in $m^3$ |
|---|---|---|---|
| **04053** | 2 | 4.0 | 0.028 |



### Pneumatic switch

For starting and stopping massage and hydromassage functions.

| | Code | Standard Pack | Standard Weight in kg | Standard Volume in $m^3$ |
|---|---|---|---|---|
| Pneumatic switch | **04050** | 25 | 1.0 | 0.028 |
| Pneumatic switch and presostat | **11290** | 6 | 0.5 | 0.028 |
| Pneumatic presostat | **11291** | 12 | 1.0 | 0.028 |

# AIR BLOWERS



## Continuous operation lateral turbo blower pump

Air pump designed for spas, baths, hydromassage installations and similar which produces a constant stream of air bubbles at medium and high air volume levels. It can also be used to stir up the filter bed, for example in back wash cycles where a low intensity air current is required.

The filter casing and impeller are made from an injected aluminium alloy whilst the motor spindle is manufactured from stainless steel, with the impeller dynamically balanced and directly adapted to the spindle. The motors, single phase or 3 phase for continuous use, are made from steel in compliance with CEI 2/3 1988 regulations, and feature IP54 external protection and class-F insulation. The standard voltages are100-120/200-240V for the monophase range and 200-240/380-440V for the triphase models, at 50/60Hz. The pumps can be mounted horizontally or vertically. Moreover, since there is no contact between the mobile parts and the pump static discharges, neither lubrication nor maintenance is necessary and it does not cause wear on the parts.

The turbines have a maximum working temperature of 40ºC. Do not use in conjunction with aggressive, inflammable or explosive gases.

| Model | Code | Frequency (Hz) | Power supply (V) | Phase | Flow rate ($m^3/h$) | Maximum pressure (mbar) | Standard weight (kg) | Standard volume ($m^3$) |
|---|---|---|---|---|---|---|---|---|
| **Blower 0.4 kW** | **33970** | 50 | Δ 200-240 Y 345-415 | 3 | 80 | 130 | 10 | 0.045 |
| **Blower 0.5 kW** | | 60 | Δ 220-275 Y 380-480 | 3 | 98 | 170 | | |
| **Blower 0.85 kW** | **35388** | 50 | 200-240 | 1 | 145 | 160 | 17 | 0.059 |
| **Blower 0.95 kW** | | 60 | 200-240 | 1 | 175 | 160 | | |
| **Blower 0.85 kW** | **35387** | 50 | Δ 200-240 Y 345-415 | 3 | 145 | 160 | 16 | 0.045 |
| **Blower 0.95 kW** | | 60 | Δ 220-275 Y 380-480 | 3 | 175 | 160 | | |
| **Blower 1.3 kW** | **31090** | 50 | 200-240 | 1 | 210 | 170 | 23 | 0.059 |
| **Blower 1.5 kW** | | 60 | 200-240 | 1 | 255 | 140 | | |
| **Blower 1.3 kW** | **31091** | 50 | Δ 200-240 Y 345-415 | 3 | 210 | 170 | 22 | 0.059 |
| **Blower 1.5 kW** | | 60 | Δ 220-275 Y 380-480 | 3 | 255 | 140 | | |
| **Blower 1.5 kW** | **33971** | 50 | 200-240 | 1 | 210 | 220 | 24 | 0.064 |
| **Blower 1.75 kW** | | 60 | 200-240 | 1 | 255 | 220 | | |
| **Blower 1.6 kW** | **31092** | 50 | Δ 200-240 Y 345-415 | 3 | 210 | 220 | 23 | 0.064 |
| **Blower 2.1 kW** | | 60 | Δ 220-275 Y 380-480 | 3 | 255 | 220 | | |
| **Blower 1.6 kW 2V** | **35389** | 50 | Δ 200-240 Y 345-415 | 3 | 150 | 300 | 25 | 0.087 |
| **Blower 2.06 kW 2V** | | 60 | Δ 220-275 Y 380-480 | 3 | 180 | 310 | | |
| **Blower 2.2 kW** | **31093** | 50 | Δ 200-240 Y 345-415 | 3 | 318 | 230 | 30 | 0.097 |
| **Blower 2.55 kW** | | 60 | Δ 220-275 Y 380-480 | 3 | 376 | 220 | | |
| **Blower 3.0 kW 2V** | **31094** | 50 | Δ 200-240 Y 345-415 | 3 | 230 | 410 | 40 | 0.126 |
| **Blower 3.45 kW 2V** | | 60 | Δ 220-275 Y 380-480 | 3 | 275 | 400 | | |
| **Blower 3.0 kW** | **31095** | 50 | Δ 200-240 Y 345-415 | 3 | 318 | 280 | 36 | 0.097 |
| **Blower 3.45 kW** | | 60 | Δ 220-275 Y 380-480 | 3 | 376 | 280 | | |
| **Blower 4.3 kW 2V** | **31096** | 50 | Δ 345-415 Y 600-720 | 3 | 520 | 600 | 54 | 0.217 |
| **Blower 4.8 kW 2V** | | 60 | Δ 380-480 Y 660-720 | 3 | 385 | 320 | | |
| **Blower 5.5 kW** | **31097** | 50 | Δ 345-415 Y 600-720 | 3 | 530 | 320 | 63 | 0.16 |
| **Blower 6.3 kW** | | 60 | Δ 380-480 Y 660-720 | 3 | 620 | 340 | | |
| **Blower 5.5 kW 2V** | **33972** | 50 | Δ 345-415 Y 600-720 | 3 | 320 | 515 | 66 | 0.201 |
| **Blower 6.3 kW 2V** | | 60 | Δ 380-480 Y 660-720 | 3 | 385 | 530 | | |
| **Blower 7.5 kW** | **31098** | 50 | Δ 345-415 Y 600-720 | 3 | 530 | 400 | 66 | 0.16 |
| **Blower 8.6 kW** | | 60 | Δ 380-480 Y 660-720 | 3 | 620 | 400 | | |
| **Blower 11 kW 2V** | **33973** | 50 | Δ 345-415 Y 600-720 | 3 | 520 | 600 | 104 | 0.353 |
| **Blower 12.6 kW 2V** | | 60 | Δ 380-480 Y 660-720 | 3 | 620 | 600 | | |
| **Blower 12.5 kW** | **33974** | 50 | Δ 345-415 Y 600-720 | 3 | 1050 | 270 | 116 | 0.353 |
| **Blower 14.5 kW** | | 60 | Δ 380-480 Y 660-720 | 3 | 1250 | 260 | | |



## Intermittent operation air blower, 900 W

| | Code | Standard Pack | Standard Weight in kg | Standard Volume in $m^3$ |
|---|---|---|---|---|
| 0.90 kW flow 54 $m^3/h$ at 1.5 m water head | **19289** | 1 | 3.5 | 0.028 |

# AIR BLOWERS



## Water pump

ABS (25%) and fibreglass (75%) housing. A 0.37 kW (0.5 hp) motor. IP-55 electrical connection rating of 24 V 220 V 1~ 50Hz . 2" male suction connection. 1½" male return connection.

**TECHNICAL DETAILS**

| Water head | m³/h |
|---|---|
| 2 | 16.5 |
| 4 | 14.8 |
| 6 | 12.6 |
| 8 | 10 |
| 10 | 7 |

| Code | Standard Pack | Standard Weight in kg | Standard Volume in m³ |
|---|---|---|---|
| **04091** | 1 | 6.0 | 0.016 |



## Intermittent operation air blower

| | Code | Standard Pack | Standard Weight in kg | Standard Volume in m³ |
|---|---|---|---|---|
| 0.74 kW, Flow 65 m³/h at 1 m water head | **06862** | 1 | 3.5 | 0.028 |
| 1.10 kW, Flow 133 m³/h at 1 m water head | **06863** | 1 | 3.5 | 0.028 |



## Cala Pump

Centrifugal pump for spas, backwashes and other applications.

- Pump body manufactured in polypropylene reinforced with fibreglass, resistant to pool chemical products thus guaranteeing long and excellent duration.
- Turbine in Noryl.
- Graphite and ceramic mechanical seal.
- AISI 316L stainless steel motor spindle.
- Enclosed motor, completely silent, with IP-55 protection at 2850 r.p.m. Single phase power voltage at 230V-50Hz or triphase at 230/400-50Hz.
- Versions from 1.5 to 4.5 HP.
- Suction and return connections for gluing hoses included with the pump.
- Suction and return at Ø63.



| | Code | Standard Pack | Standard Weight in kg | Standard Volume in m³ |
|---|---|---|---|---|
| Single phase 1.1 kW Cala Pump | **CA150M** | 1 | 15.0 | 0.058 |
| Tri phase 1.1 kW Cala Pump | **CA150T** | 1 | 15.0 | 0.058 |
| Single phase 1.5 kW Cala Pump | **CA200M** | 1 | 16.5 | 0.058 |
| Tri phase 1.5 kW Cala Pump | **CA200T** | 1 | 16.5 | 0.058 |
| Single phase 2.2 kW Cala Pump | **CA300M** | 1 | 19.5 | 0.058 |
| Tri phase 2.2 kW Cala Pump | **CA300T** | 1 | 19.5 | 0.058 |
| Single phase 2.9 kW Cala Pump | **CA400M** | 1 | 22.5 | 0.058 |
| Tri phase 3.3 kW Cala Pump | **CA450T** | 1 | 22.5 | 0.058 |

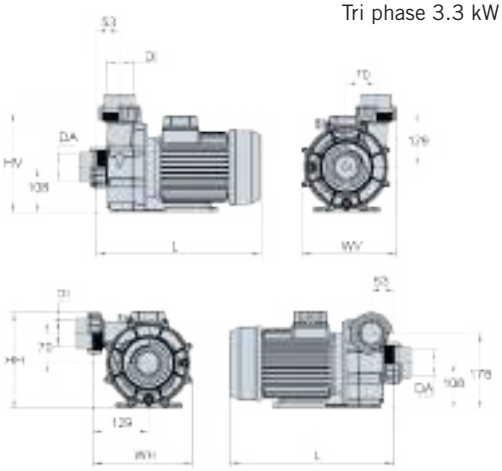

| Code | Power | | Size | | | | | | |
|---|---|---|---|---|---|---|---|---|---|
| | kW | HP | L | WV | HV | WH | HH | DA | DI |
| **CA150M** | 1.1 | 1.5 | 350 | 225 | 237 | 235 | 228 | Ø63 | Ø63 |
| **CA150T** | | | | | | | | | |
| **CA200M** | 1.5 | 2.0 | 365 | 225 | 237 | 235 | 228 | Ø63 | Ø63 |
| **CA200T** | | | | | | | | | |
| **CA300M** | 2.2 | 3.0 | 385 | 225 | 237 | 235 | 228 | Ø63 | Ø63 |
| **CA300T** | | | | | | | | | |
| **CA400M** | 2.9 | 4.0 | 415 | 225 | 237 | 235 | 228 | Ø63 | Ø63 |
| **CA450T** | 3.3 | 4.5 | | | | | | | |

## SAUNAS



### Essentia sauna

New

Essentia sauna reflects precise lines, creativity and care of details and exclusive natural woods. It merges perfectly the nordic tradition with the Italian design and accurate balanced proportions. This sauna provides perfect finishing that makes it suitable to fit into luxury wellness areas. This sauna have:

- Wall panels of Thermo Magnolia wood 15 x 170 mm.
- Benches of thermos Magnolia wood 28 mm.
- Exclusive Harvia heater with touch control panel.
- Secured transparent glass 8 mm.
- Monomaterical surfaces.
- LED White/RGB.

| Code | Type | Dimensions (cm) | Heating (kW) | Control unit |
|---|---|---|---|---|
| **To consult** | Essentia sauna | 200 x 200 x 239 | 7 kW 230/400V 3~ | Touchscreen / Exterior |
| **To consult** | Essentia sauna | 250 x 200 x 239 | 7 kW 230/400V 3~ | Touchscreen / Exterior |
| **To consult** | Essentia sauna | 250 x 250 x 239 | 10.8 kW 230/400V 3~ | Touchscreen / Exterior |
| **To consult** | Essentia sauna | 300 x 200 x 239 | 10.8 kW 230/400V 3~ | Touchscreen / Exterior |

The Essentia sauna can be made to order in the following Woods:

- Standard wood: Thermo Magnolia.
- Optional: Thermo Aspen.
- Bench wood: Thermo Magnolia (optional: Thermo Aspen).

| **Accessories** | Code | Unit | Standard Weight in kg | Standard Volume in $m^3$ |
|---|---|---|---|---|
| Stainless Steel accessories set | **70443** | un. | - | - |
| RGB Led lighting kit with remote control | **70445** | un. | - | - |
| Outside Wall finished with vertical timber panels | **70447** | Lin. m | - | - |
| Window bronze/transparent | **70449** | Sq. m | - | - |
| Aroma dosing system | **70453** | un. | - | - |





Salt generator mounted in separated room

The Innsbruck sauna can be made to order in the following woods:

- Standard wood: Red Cedar
- Optional: Nordic spruce / White pine / Thermo Aspen-Alder-Pine
- Bench wood: Abichi

### Sanama sauna / Sanama Salt Room*

New

Sanama shows and exciting design that merge natural wood with salt element from Himalaya. Its perfect finishes and excellent details become this sauna in an essential high quality element that cannot be miss in a wellness area.

Sanama contains:

- Benches and back rests made of Abachi.
- Heater with touch screen control panel (*halogenerator as an option)
- S.S. bowl for salt elements.

| Code | Type | Dimensions (cm) | Light | Control unit | Heating (kw) |
|---|---|---|---|---|---|
| **To consult** | Sanama | 150 x 150 x 210 | Led White / RGB | Touchscreen / Exterior | 4.5 kW 230/400V 3~ |
| **To consult** | Sanama | 218 x 150 x 210 | Led White / RGB | Touchscreen / Exterior | 6 kW 230/400V 3~ |
| **To consult** | Sanama | 218 x 218 x 210 | Led White / RGB | Touchscreen / Exterior | 8 kW 230/400V 3~ |
| **To consult** | Sanama | 250 x 200 x 210 | Led White / RGB | Touchscreen / Exterior | 8 kW 230/400V 3~ |
| **To consult** | Sanama | 286 x 218 x 210 | Led White / RGB | Touchscreen / Exterior | 9 kW 230/400V 3~ |

| **Accessories** | Code | Standard Pack | Standard Weight in kg | Standard Volume in $m^3$ |
|---|---|---|---|---|
| Salt decorative elements set | **70444** | un. | - | - |
| Outside Wall dinished with vertical timber panels | **70447** | Lin.m | - | - |
| RGB Chromo therapy kit with remote control | **70457** | un. | - | - |

* OPTIONAL: Halogenerator (insted of heater)







# FEEL THE PLEASURE OF BEAUTIFUL DESIGNS

Our goal is to take care for people's health and wellbeing. Therefore, our main objective in the wellness sector is to provide global value-add solutions that guarantee the well-being, health and comfort of users, regardless of the type of facility, its location or purpose.

In AstralPool we are artisans of wood. We adapt our designs to the project needs taking care of all kinds of details with the aim of achieving a high quality product.

Our planet is changing and it's changing fast. Manufacturing Saunas we want to protect the world's resources. We guarantee that all wood we use in our products grows back again.











# COMMERCIAL POOLS
# HEATING AND DEHUMIDIFICATION


592• Air-water heat pumps for outdoor installation
593• Air-water heat pumps for indoor installation
594• Water-water exchanger
595• Water-water plate heat exchanger
597• Dehumidifiers


**new app:**

## AstralPool Toolbox

Download this new app to check which heat pump and dehumidifier best adapt to your pool.

+ info
Further information on **PRODUCTS**
www.astralpool.com

# AIR-WATER HEAT PUMPS FOR OUTDOOR INSTALLATION





## ProHeat II

- 0°C minimum outdoor air temperature.
- 2 models: Standard and Chiller.
- Digital display.
- Heating priority mode (filtration pump control).
- Robust, lightweight casing made from corrosion-resistant magnesium coated aluminium.
- Axial ventilator.
- Automatic cooling mode for chiller model.
- Automatic defrosting.
- HP & LP safety pressure switch.
- Water flow switch.
- G2 Titanium water exchanger condensers. Guaranteed against corrosion.
- Scroll compressor.
- Thermostatic expansion valve, with external balancing unit.
- High performance evaporator battery in an inner corrugated copper tube with lacquered aluminium fins, especially for corrosive environments.
- Control of purifying system.
- Automatic electrical protections.

R410A

COMPATIBLE NN thing
*Fluidra Connect compatible*

TOOL BOX
*AstralPool Toolbox app for IOS and Android*

**Web**
Heat pump configurator:
www.astralpool.com -> Calculation tools

**TECHNICAL SPECIFICATIONS**

| | | MODELS | PROHEAT II 35 | PROHEAT II 45 | PROHEAT II 60 | PROHEAT II 90 | PROHEAT II 120 |
|---|---|---|---|---|---|---|---|
| | | Code STANDARD | 65542-MOB | 65543-MOB | 65544-MOB | 65545-MOB | 65546-MOB |
| | | CHILLER | 68245-MOB | 68246-MOB | 68247-MOB | 68248-MOB | 68249-MOB |
| REFRIGERANT | | | R-410A | | | | |
| WATER FLOW RATE | | m³/h | 12-15 | 15-25 | 25-35 | 30-50 | 50-70 |
| Ø WATER CONNECTION | | mm | 63 | | | 75 | |
| REFRIGERANT GAS CHARGE | | kg | 4 | 6 | 9 | 2 x 6.5 | 2 x 9 |
| NUMBER OF FAN | | | 1 | | | 2 | |
| VOLTAGE | | V/Ph/Hz | 400/3/50 | | | | |
| SOUND LEVEL | | dbA (d*) | 66.2 | 66.2 | 72.5 | 71.1 | 71.1 |
| | | dbA (5 m) | 60.9 | 60.9 | 68.4 | 69.4 | 69.4 |
| 25°C Tª AIR 26°C Tª WATER | INPUT POWER | kW | 6.4 | 8.2 | 11.9 | 17.0 | 24.3 |
| | OUTPUT POWER | kW | 36.2 | 44.4 | 63.5 | 91.3 | 125.5 |
| | COP | | 5.7 | 5.4 | 5.3 | 5.4 | 5.2 |
| 15°C Tª AIR 26°C Tª WATER | INPUT POWER | kW | 6.2 | 8.1 | 11.5 | 16.8 | 23.9 |
| | OUTPUT POWER | kW | 30.5 | 39.7 | 56.8 | 80.2 | 110.5 |
| | COP | | 4.9 | 4.9 | 4.9 | 4.8 | 4.6 |
| 5°C Tª AIR 26°C Tª WATER | INPUT POWER | kW | 6.0 | 7.9 | 10.7 | 16.2 | 22.7 |
| | OUTPUT POWER | kW | 23.2 | 30.0 | 41.3 | 61.0 | 80.1 |
| | COP | | 3.9 | 3.8 | 3.9 | 3.8 | 3.5 |
| **CHILLER MODE** | | | | | | | |
| 30°C AIR TEMPERATURE 26°C WATER TEMPERATURE | INPUT POWER | kW | 7.0 | 8.4 | 12.0 | 17.3 | 24.4 |
| | OUTPUT POWER | kW | 42.3 | 51.0 | 72.0 | 104.0 | 140.0 |
| | EER | | 6.0 | 6.1 | 6.0 | 6.0 | 5.7 |
| 43°C AIR TEMPERATURE 32°C WATER TEMPERATURE | INPUT POWER | kW | 9.4 | 11.9 | 15.6 | 24.5 | 31.2 |
| | OUTPUT POWER | kW | 29.1 | 37.0 | 49.5 | 74.0 | 99.0 |
| | EER | | 3.1 | 3.1 | 3.2 | 3.0 | 3.2 |
| **STANDARD AND CHILLER MODELS** | | | | | | | |
| SIZE | | | | | | | |
|  | A (mm) | | 1000 | | 1700 | 2100 | 2400 |
| | B (mm) | | 950 | | | 1200 | |
| | C (mm) | | 1140 | | 1200 | 1500 | 1700 |
| NET WEIGHT | | kg | 185 | 210 | 287 | 447 | 500 |

NOTE: d* = As per UNE-EN 12102/ISO 3744:2010.

# AIR-WATER HEAT PUMPS FOR INDOOR INSTALLATION



## ProHeat II

- 0°C minimum outdoor air temperature.
- Digital display, easy-to-use control panel, with display of current temperature, setpoint and alarm messages.
- Heating priority mode (filtration pump control).
- Robust, lightweight casing made from corrosion-resistant magnesium coated aluminium.
- Axial ventilator.
- Automatic cooling mode (chiller model).
- Automatic defrosting.
- HP & LP safety pressure switch.
- Water flow switch.
- G2 Titanium water exchanger condensers. Guaranteed against corrosion.
- Scroll compressor.
- Thermostatic expansion valve, with external balancing unit.
- High performance evaporator battery in an inner corrugated copper tube with lacquered aluminium fins, especially for corrosive environments.
- Control of purifying system.
- Automatic electrical protections.
- Centrifugal fans so the unit will be installed in a technical room, using air ducting.

*Fluidra Connect compatible*

*AstralPool Toolbox app for IOS and Android*

**Web**
Heat pump configurator:
www.astralpool.com -> Calculation tools

**TECHNICAL SPECIFICATIONS**

| | | MODELS | PROHEAT II IND-35 | PROHEAT II IND-45 | PROHEAT II IND-60 | PROHEAT II IND-90 | PROHEAT II IND-120 |
|---|---|---|---|---|---|---|---|
| | | CODE | 69649-MOB | 69650-MOB | 69651-MOB | 69652-MOB | 69653-MOB |
| REFRIGERANT | | | R-410A | | | | |
| WATER FLOW RATE | | $m^3/h$ | 12-15 | 15-25 | 25-35 | 30-50 | 50-70 |
| Ø WATER CONNECTION | | mm | 63 | | 75 | | |
| REFRIGERANT GAS CHARGE | | kg | 6 | 9 | 12 | 2 x 7 | 2 x 9 |
| NUMBER OF FAN | | | 1 | | | 2 | |
| VOLTAGE | | V/Ph/Hz | 400/3/50 | | | | |
| SOUND LEVEL | | dbA (d*) | 59.2 | 59.6 | 60.0 | 61.1 | 61.5 |
| | | dbA (5 m) | 55.4 | 55.8 | 56.1 | 56.5 | 56.6 |
| 25°C Tª AIR 26°C Tª WATER | INPUT POWER | kW | 6.7 | 9.4 | 11.8 | 18.7 | 23.6 |
| | OUTPUT POWER | kW | 43.6 | 56.6 | 71.0 | 113.1 | 141.9 |
| | COP | | 6.5 | 6.0 | 6.0 | 6.0 | 6.0 |
| 15°C Tª AIR 26°C Tª WATER | INPUT POWER | kW | 6.4 | 8.6 | 11.0 | 17.1 | 22.1 |
| | OUTPUT POWER | kW | 34.9 | 45.0 | 57.5 | 90.1 | 114.9 |
| | COP | | 5.4 | 5.3 | 5.2 | 5.3 | 5.2 |
| 5°C Tª AIR 26°C Tª WATER | INPUT POWER | kW | 6.5 | 8.5 | 11.2 | 16.9 | 22.3 |
| | OUTPUT POWER | kW | 27.4 | 35.2 | 45.2 | 70.5 | 90.3 |
| | COP | | 4.2 | 4.2 | 4.1 | 4.2 | 4.1 |
| **DIMENSIONS** | | | | | | | |
| SIZE | | | | | | | |
|  | A (mm) | | 1610 | 1910 | | 1922+50 | 2400+100 |
| | B (mm) | | 1160+100 | 1197+100 | | 2110+100 | 2024+50 |
| | C (mm) | | 1347+50 | 1497+50 | | 1590+50 | 1670+50 |
| NET WEIGHT | | kg | 315 | 391 | 437 | 648 | 757 |

NOTE: d* = As per UNE-EN 12102/ISO 3744:2010.

+ info
Further information on **PRODUCTS**
www.astralpool.com

# WATER-WATER EXCHANGER





## Waterheat EVO

Heat exchanger suitable for warming the water temperature of pools and SPAS, thanks to the heat exchange between the primary circuit (warm area) and a secondary one (cold area that we want to warm).

- Titanium housing (secondary, pool water).
- Titanium coil (primary, water for boiler).
- Primary working pressure of 10 bar.
- Secondary working pressure of 3 bar.

| | Code | Standard Pack | Standard Weight in kg | Standard Volume in m³ |
|---|---|---|---|---|
| TIT-20 kW | **71607** | 1 | 1.2 | - |
| TIT-40 kW | **71608** | 1 | 1.7 | - |
| TIT-60 kW | **71609** | 1 | 1.9 | - |
| TIT-105 kW | **71610** | 1 | 2.2 | - |
| TIT-140 kW | **71611** | 1 | 2.7 | - |
| TIT-210 kW | **71612** | 1 | 3.8 | - |
| TIT-300 kW | **71613** | 1 | 5.3 | - |
| TIT-450 kW | **71614** | 1 | 6.8 | - |

**Diagram of assembly below the water level:**

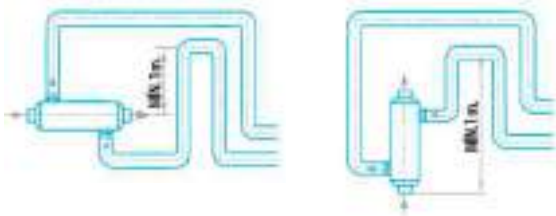

**Diagram of assembly below the water level:**



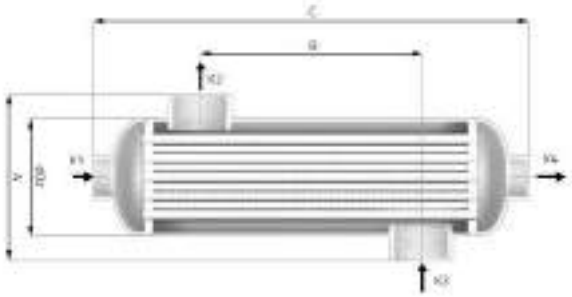

## TECHNICAL FEATURES

| | MODELS | TIT-20 KW | TIT-40 KW | TIT-60 KW | TIT-105 KW | TIT-140 KW | TIT-210 KW | TIT-300 KW | TIT-450 KW |
|---|---|---|---|---|---|---|---|---|---|
| | CODES | 71607 | 71608 | 71609 | 71610 | 71611 | 71612 | 71613 | 71614 |
| POWER (kW) | 90ºC | 20 | 40 | 60 | 105 | 140 | 210 | 300 | 450 |
| | 60ºC | 10 | 20 | 30 | 40 | 60 | 80 | 120 | 210 |
| | 45ºC | 5 | 10 | 15 | 20 | 3 | 40 | 60 | 100 |
| HEATER | m³/h | 1.6 | 2.7 | 3.1 | 6.6 | 7.0 | 10.0 | 11.0 | 16.0 |
| HEATER LOAD LOSS | bar | 0.006 | 0.024 | 0.040 | 0.030 | 0.040 | 0.122 | 0.214 | 0.470 |
| HEATER CONNECTION | Inch | G ¾" | | | G 1 ½" | | | | |
| POOL VOLUME | m³/h | 11 | 15 | 20 | 23 | 20 | 25 | 20 | 21 |
| POOL HEAD LOSS | bar | 0.119 | 0.192 | 0.418 | 0.293 | 0.316 | 0.633 | 0.596 | 0.860 |
| POOL CONNECTION | Inch | G 1" | G 1 ½" | | | | | | |
| DIMENSIONS | A (mm) | 122 | | | 140 | | | | |
| | B (mm) | 75 | 175 | 225 | 170 | 270 | 420 | 670 | 920 |
| | C (mm) | 290 | 390 | 440 | 357 | 457 | 607 | 857 | 1107 |
| | Ø Dz | 80 | | | 102 | | | | |
| WEIGHT | kg | 1.2 | 1.7 | 1.9 | 2.2 | 2.7 | 3.8 | 5.3 | 6.8 |

Consult your service engineer about the right selection of unit depending on your installation.
Figures for power settings calculated for pool water at 20° C.

# WATER-WATER PLATE HEAT EXCHANGER



## Equipped Waterheat

Heat exchanger suitable for warming the water temperature of pools and SPAS, thanks to the heat exchange between the primary circuit (warm area) and a secondary one (cold area that we want to warm).

- Regulator with secondary pump control, voltage free contact and timer.
- Casing built in Alucoil and ABS plastic.
- Body made in Titanium (secondary, water from pool).
- Coils made in titanium alloy (primary, water from boiler).
- Fully fitted, anti-return valve, primary recirculation pump and control thermostat with immersion probe.
- Primary work pressure 10 bars and secondary work pressure 3 bars.

**CONNECTIONS:**

- Primary (heating): 1".
- Secondary (pool): D-50 three piece link.

| | Code | Standard Pack | Standard Weight in kg | Standard Volume in m³ |
|---|---|---|---|---|
| TIT-20 kW | **43506** | 1 | 10 | - |
| TIT-40 kW | **43507** | 1 | 11 | - |
| TIT-60 kW | **43508** | 1 | 18 | - |

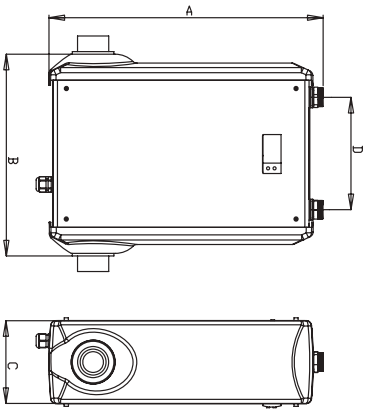





**TECHNICAL FEATURES**

| | MODELS | EQUIP. WATERHEAT-20KW | EQUIP. WATERHEAT-40KW | EQUIP. WATERHEAT-60KW |
|---|---|---|---|---|
| | CODES | 43506 | 43507 | 43508 |
| POWER (kW) | 90ºC | 20 | 40 | 60 |
| | 60ºC | 10 | 20 | 30 |
| | 45ºC | 5 | 10 | 15 |
| HEATER | m³/h | 1.6 | 2.7 | 3.0 |
| HEATER LOAD LOSS | bar | 0.12 | 0.41 | 0.70 |
| HEATER CONNECTION | Inch | - | - | - |
| POOL VOLUME | m³/h | 10 | 15 | 20 |
| POOL HEAD LOSS | bar | 0.14 | 0.24 | 0.29 |
| POOL CONNECTION | Inch | - | - | - |
| DIMENSIONS | A (mm) | 530 | 530 | 530 |
| | B (mm) | 450 | 590 | 650 |
| | C (mm) | 160 | 160 | 160 |
| | D (mm) | 215 | 225 | 305 |
| | E (mm) | 1" | 1" | 1" |
| WEIGHT | kg | 10 | 11 | 18 |

Consult your service engineer about the right selection of unit depending on your installation.
Figures for power settings calculated for pool water at 20º C.

# WATER/WATER PLATE HEAT EXCHANGER

## Etna

- Corrugated plates in AISI-316 or Titanium.
- EPDM gaskets.
- Housing in epoxy painted carbon steel.
- In non-equipped heat exchangers, AISI-316 stainless steel connections in ISO G2 direct thread.
- In "equipped" heat exchangers, primary connections in copper, and secondary in PVC.
- In "equipped" heat exchangers, full regulation, with control of the filtering pump. Double display (setpoint and current reading).
- Simple recirculating pump in the primary circuit is optional.



**Basic model**



**Equipped model**



**Equipped model + recirculating pump**

| Model | AISI-316 codes | | | Titanium codes | | | Power | | N° Plates | Primary circuit | | | Secondary circuit | | |
|---|---|---|---|---|---|---|---|---|---|---|---|---|---|---|---|
| | Basic model | Equipped model | Model Eq+B(1) | Basic model | Equipped model | Model Eq+B(1) | KW | (kcal/h) | | Flow rate ($m^3/h$) | Head loss (bar) | Connections | Flow rate ($m^3/h$) | Head loss (bar) | Connections |
| ETNA-15 | **67985** | **68230** | **68021** | **67994** | **68012** | **68030** | 17 | 15,000 | 5 | 0.75 | 0.3 | 1 ¼" | 0.74 | 0.3 | 1 ¼" |
| ETNA-35 | **68223** | **68004** | **68022** | **67995** | **68013** | **68031** | 40 | 35,000 | 7 | 1.55 | 0.3 | 1 ¼" | 1.52 | 0.3 | 1 ¼" |
| ETNA-50 | **68224** | **68005** | **68023** | **67996** | **68014** | **68032** | 58 | 50,000 | 9 | 2.56 | 0.3 | 1 ¼" | 2.51 | 0.3 | 1 ¼" |
| ETNA-60 | **68225** | **68006** | **68024** | **67997** | **68015** | **68033** | 70 | 60,000 | 11 | 3.09 | 0.3 | 1 ¼" | 3.03 | 0.3 | 1 ¼" |
| ETNA-90 | **67989** | **68007** | **68025** | **67998** | **68016** | **68034** | 105 | 90,000 | 15 | 4.64 | 0.3 | 1 ¼" | 4.55 | 0.3 | 1 ¼" |
| ETNA-120 | **67990** | **68008** | **68026** | **68226** | **68017** | **68035** | 140 | 120,000 | 19 | 6.19 | 0.3 | 1 ¼" | 6.07 | 0.3 | 1 ¼" |
| ETNA-150 | **67991** | **68009** | **68027** | **68227** | **68018** | **68036** | 174.4 | 150,000 | 23 | 7.71 | 0.3 | 1 ¼" | 7.56 | 0.3 | 1 ¼" |
| ETNA-180 | **67992** | **68010** | **68028** | **68228** | **68019** | **68037** | 209 | 180,000 | 29 | 9.23 | 0.3 | 1 ¼" | 9.06 | 0.3 | 1 ¼" |
| ETNA-200 | **67993** | **68011** | **68029** | **68229** | **68020** | **68038** | 233 | 200,000 | 31 | 10.3 | 0.3 | 1 ¼" | 10.1 | 0.3 | 1 ¼" |
| ETNA-250 | **32550** | **32563** | **32576** | **33137** | **33155** | **33173** | 291 | 250,000 | 15 | 12.86 | 0.3 | 2 ½" | 12.61 | 0.3 | 2 ½" |
| ETNA-300 | **32552** | **32565** | **32578** | **33139** | **33157** | **33175** | 349 | 300,000 | 17 | 15.42 | 0.3 | 2 ½" | 15.13 | 0.3 | 2 ½" |
| ETNA-350 | **32553** | **32566** | **32579** | **33140** | **33158** | **33176** | 407 | 350,000 | 21 | 17.98 | 0.3 | 2 ½" | 17.64 | 0.3 | 2 ½" |
| ETNA-400 | **33114** | **33119** | **33124** | **33141** | **33159** | **33177** | 465 | 400,000 | 23 | 20.55 | 0.3 | 2 ½" | 20.13 | 0.3 | 2 ½" |
| ETNA-460 | **33115** | **33120** | **33125** | **69796** | **33160** | **33178** | 535 | 460,000 | 25 | 23.64 | 0.3 | 2 ½" | 23.19 | 0.3 | 2 ½" |
| ETNA-500 | **32554** | **32567** | **32580** | **69797** | **33161** | **33179** | 581 | 500,000 | 27 | 25.18 | 0.3 | 2 ½" | 25.18 | 0.3 | 2 ½" |
| ETNA-580 | **33116** | **33121** | **33126** | **69798** | **33162** | **33180** | 675 | 580,000 | 33 | 29.26 | 0.3 | 2 ½" | 29.26 | 0.3 | 2 ½" |

(1) Eq + B: Equipped model + recirculating pump.

# DEHUMIDIFIERS



## BDP Confort Dehumidifying Unit

The BDP Confort heat pump is used for the dehumidification of indoor pools, using the latent heat of evaporation and the performance of the system itself to heat the pool water and the room air.
The energy savings achieved with these systems compared to traditional heating systems mean that they are virtually essential when you wish to heat an indoor pool.
The wide range of models covers all market requirements.

- Made of non-corrosive magnesium coated aluminium.
- Thermal-acoustic inside insulation.
- Direct transmission single centrifugal ventilator. Radial Ventilator Optional.
- Air filter can be changed for a G4 type filter.
- Condensation collection gutter with drainpipe.
- A copper nitrogen, dehydrated and deoxidized refrigerated circuit. Air condensation.
- Ozone-safe R407C refrigerant gas charge (ecological).
- Evaporation, condensation and hot water batteries made of copper pipes with lacquered aluminium fins (specially designed for corrosive environments).
- Airtight compressor mounted on anti-vibration mounts.
- Pressure balancing expansion valve.
- High and low pressure switch.
- General security switch.
- Power source, compressor and ventilator motor protection mechanisms.
- Full adjustment of all the items included.
- Three-way valves and their regulation when a hot water coil is incorporated.

**Optional:**

- 1 or 2 stage electric heating option to support air heating.
- Hot water coil to support air heating, with three-way valve, temperature probe and regulation (ask about primary temperatures different to standard equipment).
- Freecooling or mixed chamber and shutter to bring in outside air.
- Optional enthalpic regulation in the case of freecooling.

**Generation Operating Conditions**

The thermo-hygrometric conditions for these facilities that are considered optimal for materials and people include:

- Air 28ºC - 30ºC
- 65% HR
- Water 2ºC below air temperature.

TOOL BOX

*AstralPool Toolbox app for IOS and Android*

**Web**
**Dehumidifier configurator: www.astralpool.com -> Calculation tools**

### TECHNICAL FEATURES

| | MODELS | BDP-4 | BDP-5 | BDP-6 | BDP-8 | BDP-10 | BDP-12 | BDP-16 |
|---|---|---|---|---|---|---|---|---|
| DEHUMIDIFICATION CAP. | l/h | 4,2 | 5,2 | 5,9 | 8,3 | 11 | 12,5 | 17,35 |
| AIR CONDENSATION POWER | kW | 7.1 | 8.5 | 11.6 | 12.4 | 13.8 | 19.1 | 26.7 |
| **COOLING CIRCUIT** | | | | | | | | |
| TYPE OF COMPRESSOR | | ROTARY | | | | | | |
| GAS LOAD | Kg. | 3 | 3,5 | 4 | 5 | 9 | 9 | 10 |
| VOLTAGE | V/Ph/Hz | 230 / 1 / 50 | | | 400 / 3 / 50 | | | |
| MAX. CONSUMPTION | kW | 1,8 | 2,4 | 3,71 | 3,66 | 4,33 | 5,49 | 6,81 |
| **FANS** | | | | | | | | |
| TYPE | | CENTRIFUGAL | | | | | | |
| AIR FLOW RATE | m³/h | 1000 | 1200 | 1800 | 2800 | 3800 | 4300 | 5500 |
| TOTAL AVAILABLE PRESSURE | mca | 15 | 15 | 20 | 20 | 20 | 20 | 20 |
| MAX. CONSUMPTION KW | RETURN | 0,2 | 0,2 | 0,25 | 0,55 | 1,1 | 1,1 | 3,00 |
| **OTHER DATA** | | | | | | | | |
| Ø DRAIN | mm | 22 | | | | | | |
| NOISE LEVEL AT 1 M | dB | 68 | | | | 69 | | 70 |
| WEIGHT | kg | 100 | 110 | 160 | 182 | 270 | 360 | 448 |
| AIR FILTERS | | G4 | | | | | | |
| **OPTIONAL** | | | | | | | | |
| ELECTRIC HEATING POWER | W | 5.0 | | - | - | - | - | - |
| HOT WATER COIL POWER – POWER | W | 11.6 | | 22.2 | | 35.8 | | 54.9 |
| HOT WATER COIL POWER – PRIMARY T. | ªC | 90 | | | | | | |
| HOT WATER COIL POWER | ªC | 70 | | | | | | |
| HOT WATER COIL POWER – FLOW RATE | l/h | 500 | 500 | 990 | 990 | 1590 | 1590 | 2420 |
| HOT WATER COIL POWER – CONNECTION | Inches | ¾" | ¾" | ¾" | ¾" | ¾" | ¾" | ¾" |

1) For 28 ºC air T. 65% RH, 24 ºC water T,
2) Return plus suction.

+ info
Further information on **PRODUCTS**
www.astralpool.com

# DEHUMIDIFIERS





TOOL BOX

*AstralPool Toolbox app for IOS and Android*

## AirPool

The new AIRPOOL dehumidifier is used to dehumidify covered pools by harnessing the latent heat from vaporisation and the very output of the equipment in heating the basin water and pool ambient air, recovering the energy needed and controlling air temperature and relative humidity.

**STRUCTURE**

- The structure is made from aluminium profiles with reinforced nylon on the corners.
- The housing is a 25 mm sandwich panel with IDROTEC polyurethane and auto-close handles, classifying the equipment as tightness L1(M) and thermal transmission T2.
- Condensation collection gutter with drainpipe.

**COOLING CIRCUIT**

- Evaporation and condensation battery made out of copper pipes with lacquered aluminium fins.
- Scroll compressor.
- R-410A refrigerant gas.

**AIR CIRCUIT**

- G4 filter.
- Free-cooling system made up of three motorized weir flaps, mixing chamber and return fan.

**REGULATORS**

- Through a programmable electronic regulator.
- Return air and outside air humidity and temperature probes, and a pool water temperature probe.
- Dirty filter pressure switches.
- Control of the pool water circulation pump through a voltage-free contact.
- Free-cooling weir flap servomotors.

**OPTIONAL**

- Harnesses the energy in the air discharged from the high-performance crossflow recuperator (according to Spain's RITE Regulation for Thermal Installations in Buildings)
- High-performance backup hot water coil manufactured in copper piping and lacquered aluminium fins specially designed for corrosive atmospheres. Includes a 3-way proportional valve. Controls flow temperature as an optional extra.
- Titanium condensers with PVC shell and Titanium coil.
- M6 filter in pool air suction unit and exterior air inlet and F8 filter in flow unit.
- Siemens regulation with touchscreen, enthalpy control and Eco operating mode, reducing fan flow in line with setpoints.
- Electronic radial plug fan with flow rate control.
- Water-water exchanger, assembled with the water condenser as a series feature.
- Increased air and pressure flow available in fans.
- External condenser.
- Weatherproofed.
- Optional $CO_2$ probes for controlling the quality of the air and adjusting it.
- Remote management.
- AND/OR preventive maintenance.
- AND/OR warranty extension.
- Start-up.

**TECHNICAL FEATURES**

| MODELS | | AIRPOOL-9 | AIRPOOL-14 | AIRPOOL-18 | AIRPOOL-25 | AIRPOOL-35 | AIRPOOL-45 | AIRPOOL-55 | AIRPOOL-70 | AIRPOOL-85 | AIRPOOL-110 | AIRPOOL-140 | AIRPOOL-180 |
|---|---|---|---|---|---|---|---|---|---|---|---|---|---|
| CODES | | 67665 | 67666 | 67667 | 67668 | 67669 | 67670 | 67671 | 67672 | 67673 | 67674 | 67675 | 67676 |
| Voltage | V/Ph/Hz | 230 / 1 / 50 | 400 / 3 / 50 | | | | | | | | | | |
| Dehumidification (1) | kg/h | 8.4 | 14.1 | 18.6 | 27.0 | 34.5 | 47.1 | 54.3 | 71.2 | 86.5 | 108.0 | 136.9 | 177.8 |
| Dehumidification (2) | kg/h | 11.6 | 18.0 | 23.0 | 34.4 | 42.7 | 59.0 | 69.1 | 88.9 | 108.0 | 135.0 | 177.0 | 231.0 |
| Dehumidification (3) | kg/h | 6.1 | 10.3 | 12.7 | 16.6 | 22.9 | 30.9 | 34.5 | 46.0 | 57.0 | 72.2 | 90.9 | 116.5 |
| Air flow rate | m³/h | 1800 | 2500 | 3800 | 5500 | 7000 | 10000 | 12000 | 15000 | 18000 | 22000 | 30000 | 40000 |
| Crossflow recuperator | m³/h | 540 | 750 | 1140 | 1800 | 2100 | 3000 | 3600 | 4500 | 5500 | 7000 | 10000 | 13500 |
| Air battery power (80-60°C) | kW | 14.3 | 22.1 | 29.3 | 40.7 | 54.2 | 78.3 | 88.1 | 111.5 | 134.1 | 167.1 | 237.5 | 293.8 |

(1) Local 28°C 65% hr with 30% outside air 20°C 70% hr. With recuperator.
(2) VDI 2089 Local 30°C 54% hr with 30% outside air 5°C 80% hr. With recuperator.
(3) Local 28°C 65% hr in recirculation.

## DEHUMIDIFIERS



### AirPool+

The new high performance AIRPOOL + dehumidifier is used for dehumidifying indoor pools. Thanks to its design, in which the cooling circuit components are distributed differently to conventional dehumidifiers, it uses the dehumidified air to recover heat. By optimising its various operating modes, huge savings can be made in running a pool.

**STRUCTURE**

- The structure is made from aluminium profiles with reinforced nylon on the corners.
- The housing is a 45 mm sandwich panel with IDROTEC polyurethane and auto-close handles, classifying the equipment as tightness L1(M) and thermal transmission T2.
- Condensation collection gutter with drainpipe.
- Equipment interior with painted sheet metal for greater durability against chlorine degradation.

**COOLING CIRCUIT**

- High-performance evaporation and condensation batteries manufactured in copper piping and lacquered aluminium fins.
- Scroll compressor.
- R-410A refrigerant gas.

**AIR CIRCUIT**

- M6 filter in pool air suction unit and exterior air inlet and F8 filter in flow unit.
- Radial plug fans with flow rate control
- Free-cooling system made up of three motorized weir flaps, mixing chamber and return fan.
- Harnesses the energy in the air discharged from the crossflow recuperator from 100% of flow
- Back-up water heating battery. With three-way proportional valve and flow-rate temperature control.

**REGULATORS**

- Siemens regulation with touchscreen, absolute humidity control and Eco operating mode, reducing fan flow in line with setpoints.
- Return air and outside air humidity and temperature probes, and a pool water temperature probe.
- Dirty filter pressure switches.
- Control of the pool water circulation pump through a voltage-free contact.
- Servomotors for free-cooling weirs.

**OPTIONAL**

- Increase in air flow rate (involves rise in heating battery power)
- Titanium condensers with PVC shell and Titanium coil.
- Water-water exchanger, assembled with the water condenser as a series feature.
- Equipment can be operated in reverse to expel surplus heat from the facility.
- Weatherproofed.
- Optional $CO_2$ probes for controlling the quality of the air and adjusting it.
- ModBus.
- Remote management.
- AND/OR preventive maintenance.
- AND/OR warranty extension.
- Start-up.



**Only heats air.**



**Dehumidification through alpha circuit**



**Dehumidification through alpha circuit with air renewal**



**Full air renewal.**

**TECHNICAL FEATURES**

| MODELS | | AIRPOOL+ 12 | AIRPOOL+ 22 | AIRPOOL+ 30 | AIRPOOL+ 44 | AIRPOOL+ 54 | AIRPOOL+ 70 | AIRPOOL+ 84 | AIRPOOL+ 108 | AIRPOOL+ 132 | AIRPOOL+ 175 |
|---|---|---|---|---|---|---|---|---|---|---|---|
| CODES | | 67677 | 67678 | 67679 | 67680 | 67681 | 67682 | 67683 | 67684 | 67685 | 67686 |
| Voltage | V/Ph/Hz | 220 / 1 / 50 | 400 / 3 / 50 | | | | | | | | |
| Dehumidification (1) | kg/h | 13.4 | 22.3 | 21.7 | 44.3 | 53.6 | 70.9 | 84.2 | 110.7 | 133.4 | 177.6 |
| Dehumidification (2) | kg/h | 25.6 | 30.2 | 57.1 | 85.6 | 102.3 | 136.8 | 162.4 | 213.7 | 256.2 | 342.3 |
| Dehumidification (3) | kg/h | 8.0 | 12.8 | 12.3 | 25.0 | 37.8 | 42.5 | 50.6 | 66.5 | 83.7 | 130.9 |
| Air flow rate | m³/h | 2100 | 3500 | 4900 | 7000 | 8400 | 11200 | 13300 | 17500 | 21000 | 28000 |
| Recuperator efficacy (1) | % | 67 | 69 | 71 | 68 | 73 | 70 | 70 | 70 | 68 | 68 |
| Air battery power (90-70ºC) | kW | 20.4 | 38.7 | 48.5 | 71.0 | 87.9 | 106.7 | 134.2 | 177.8 | 216.5 | 273.0 |

(1) Local 28°C 65% hr with 30% outside air 20°C 70% hr.
(2) VDI 2089 Local 30°C 54% hr with 30% outside air 5°C 80% hr.
(3) Local 28°C 65% hr in recirculation.





# COMMERCIAL POOLS
# COMPETITION MATERIALS


602 • Competition pool systems
604 • Swimming pool competition podiums
606 • Lane ropes
607 • Floats
608 • Lane rope storage equipment
609 • Lane rope accessories
611 • Signage
612 • Turning panels
613 • Attachments for competition equipment
613 • Water polo goal

## COMPETITION POOL SYSTEMS

### Sparger. Safety on diving boards.

When diving off a diving board, the undisturbed water forms a fairly resistant surface, which if combined with a bad descent can result in serious injury on impact.

AstralPool has added Sparger technology to its pools in the shape of a new safety system for diving pools. Air is released at high pressure from the pool floor, which forms a large amount of bubbles when it mixes with the water to form a cushion for divers. This reduces the risk of injury and divers are more confident when they dive into the water, whether they are beginners or professionals.



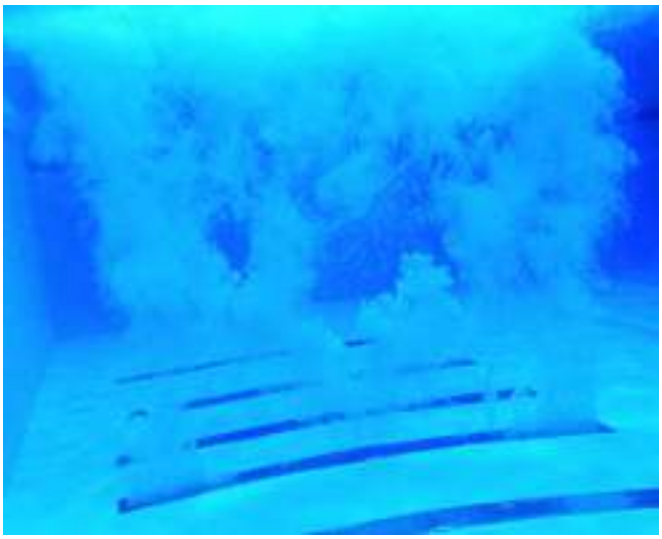

### Movable wall. Divides pools and multiplies their uses.



Technology that allows a single pool to be divided into two separate pools for different uses. This therefore makes better use of space and gives swimmers a greater variety of options for a lower overall cost.

The movable wall system is able to adapt to and be used in existing pools or newly built ones.

The movable wall is made of AISI-304 stainless steel and is lined with white plastic non-slip sheeting.

## LOCATION OF THE EQUIPMENT USED IN COMPETITION POOLS

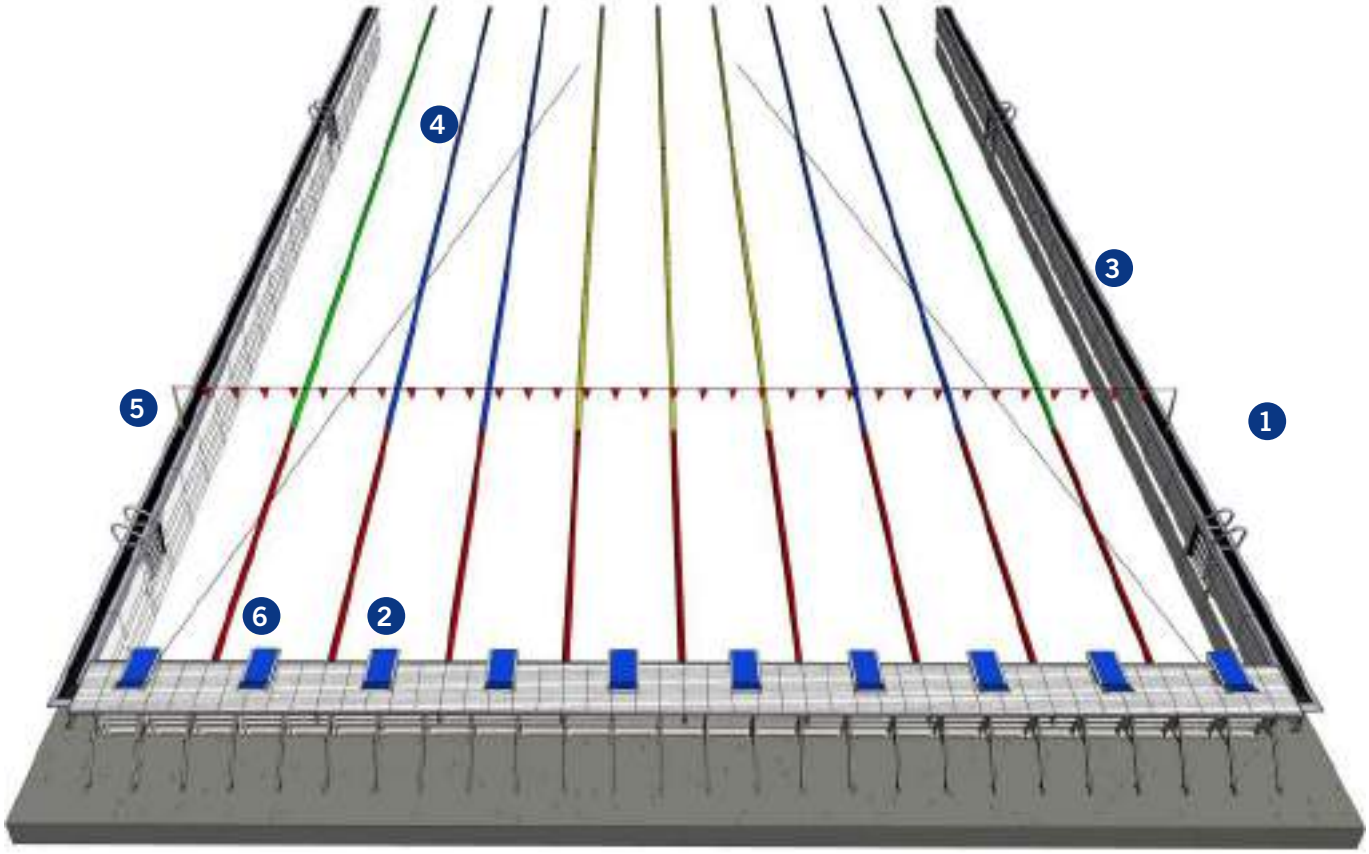


1. Ladder
2. Starting block
3. Grating for pool overflow
4. Float lines
5. Backstroke flags
6. Turning panel with supports

+ info
PDB
Further information on **PRODUCTS**
www.astralpool.com

# SWIMMING POOL COMPETITION PODIUMS



## Starting block

Specially designed for competition events. Available with adjustable footrest to facilitate entry into the water. Its minimalist design in high quality materials gives it an elegant and modern look.
Manufactured in AISI-316 stainless steel. Polished surface finish. Adjustable support (6 positions). Fastening 54460 not included in supply.

| | Code | Standard Pack | Standard Weight in kg | Standard Volume in m³ |
|---|---|---|---|---|
| Starting block | **53875** | **1** | - | - |

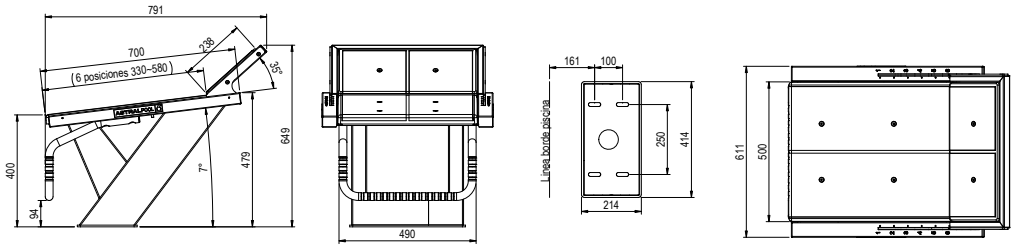




## Starting blocks

Base in S.S. AISI-316. Adjustable platform in polyester & fibreglass with non-slip finish 500 mm x 500 mm. Number sequence not included. Plate anchoring for starting block in AISI-316 code 54461 not included.

| | Code | Standard Pack | Standard Weight in kg | Standard Volume in m³ |
|---|---|---|---|---|
| **POLISHED FINISH:** | | | | |
| Height 700 mm | **00144** | 1 | 32.0 | 0.36 |
| Height 400 mm | **00145** | 1 | 25.3 | 0.18 |

**00144**

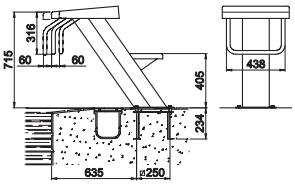


**00145**

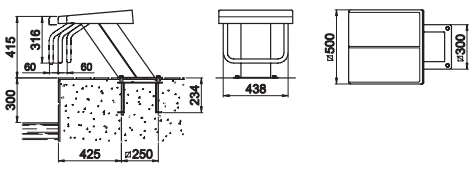




## Starting blocks

Made in S.S. AISI-304. Platform in Polyester and fibreglass with non-slip finish 500 mm x 500 mm. Number sequence not included.

| | Code | Standard Pack | Standard Weight in kg | Standard Volume in m³ |
|---|---|---|---|---|
| **POLISHED FINISH:** | | | | |
| Height 700 mm | **00146** | 1 | 25.0 | 0.48 |
| Height 400 mm | **27578** | 1 | 18.0 | 0.11 |

**00146**

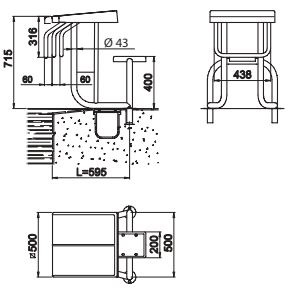


**27578**

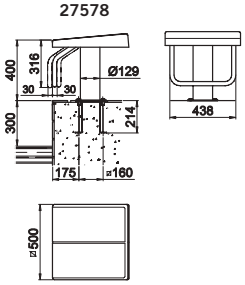


**Note:** The starting block with code number 00146 may be made to order to adapt to the position of the overflow channels. In such cases, the measurement for L must be provided.

**Notes:**
Code 00146: Fastener (code 00143), not included.
Code 27578: Fastener (code 54462), not included.

# SWIMMING POOL COMPETITION PODIUMS



## Headwall for podiums

AstralPool has created a headwall that allows starting blocks to be attached. This addition extends our range of products for competition. The item consists of an AISI-304 Stainless Steel structure and plastic grating. The platform can also be used as a turning panel and includes anchors for float lines.

| | Code | Standard Pack | Standard Weight in kg | Standard Volume in m³ |
|---|---|---|---|---|
| Headwall, lane width 2 m | **34213** | 1 | - | - |
| Headwall, lane width 2.5 m | **34214** | 1 | - | - |
| Headwall, right corner | **34215** | 1 | - | - |
| Headwall, left corner | **34216** | 1 | - | - |



**34216**

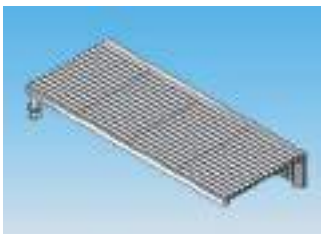

**34213 - 2 m**
**34214 - 2.5 m**



**34215**

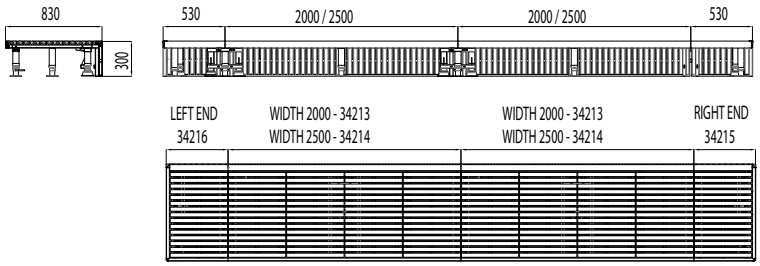


## Podium fixing

Anchoring for installation of the podiums in concrete, made in Stainless Steel AISI-304/316, composed by inground base, bolts and washers, with connection to the equipotential circuit.

| | Code | Standard Pack | Standard Weight in kg | Standard Volume in m³ |
|---|---|---|---|---|
| Competition podium fixing, made in AISI-316 | **54460** | 1 | 2.4 | 0.02 |
| Fixing for the podium made in AISI-316 | **54461** | 1 | 3.5 | 0.02 |
| Fixing for the podium made in AISI-304 | **54462** | 1 | 2.4 | 0.02 |

Fastening 54460: For podiums codes 28760 - 28761 - 53875
Fastening 54461: For podiums codes 00144 - 00145 - 19956
Fastening 54462: For podium code 27578



Height 80 mm

Height 100 mm

## Starting blocks numbers

4 units of each supplied.

| | Code | Standard Pack | Standard Weight in kg | Standard Volume in m³ |
|---|---|---|---|---|
| **Height 80 mm** | | | | |
| (For starting blocks 00146 - 27578 - 27836) | | | | |
| For starting blocks from 1 to 6 | **28616** | 1 | - | - |
| For starting blocks from 1 to 10 | **28617** | 1 | - | - |
| **Height 100 mm** | | | | |
| (For starting blocks 00144 - 00145 - 19956 - - 28760 - 28761 - 53875) | | | | |
| For starting blocks BCN03 from 1 to 6 | **34200** | 1 | 0.1 | 0.001 |
| For starting blocks BCN03 from 1 to 10 | **34201** | 1 | 0.1 | 0.001 |

+ info PDB
Further information on **PRODUCTS**
www.astralpool.com

# LANE ROPES



## BCN03 Competition lane rope model

Lane ropes supplied assembled with floats, 6 mm stainless steel rope (code 28808), tightener (00208) and spring (01468). Floats with interior turbines with an external Ø of 148 mm in accordance with FINA international swimming federation regulations.

| | Code | Standard Pack | Standard Weight in kg | Standard Volume in $m^3$ |
|---|---|---|---|---|
| **25 m** | | | | |
| Red - White colour | **67599** | 1 | - | - |
| Red - Green colour | **67601** | 1 | - | - |
| Red - Blue colour | **67602** | 1 | - | - |
| Red - Yellow colour | **67603** | 1 | - | - |
| **50 m** | | | | |
| Red - White colour | **67600** | 1 | - | - |
| Red - Green colour | **67604** | 1 | - | - |
| Red - Blue colour | **67605** | 1 | - | - |
| Red - Yellow colour | **67606** | 1 | - | - |





## Sydney model

Range comprising lane ropes with an external Ø of 148 mm in accordance with FINA international swimming federation regulation FR 3 for pools for Olympic Games or world championships. Supplied assembled with floats, 6 mm stainless steel rope (code 28808), tightener (00208) and spring (01468).

| | Code | Standard Pack | Standard Weight in kg | Standard Volume in $m^3$ |
|---|---|---|---|---|
| **12,5 m*** | | | | |
| White colour | **67607** | 1 | - | - |
| **16.5 m White colour** | | | | |
| White colour | **67608** | 1 | - | - |
| **25 m** | | | | |
| Red - White colour | **67609** | 1 | - | - |
| Red - Green colour | **67612** | 1 | - | - |
| Red - Blue colour | **67613** | 1 | - | - |
| Red - Yellow colour | **67614** | 1 | - | - |
| **33 $m^3$/h** | | | | |
| Red - White colour | **67610** | 1 | - | - |
| **50 m** | | | | |
| Red - White colour | **67611** | 1 | - | - |
| Red - Green colour | **67615** | 1 | - | - |
| Red - Blue colour | **67616** | 1 | - | - |
| Red - Yellow colour | **67617** | 1 | - | - |

* Available in other colours (blue, green, yellow)





## Roma model

Supplied assembled with floats, 7 mm polyester rope (code 00210), tightener (00209) and hook (00207).

| | Code | Standard Pack | Standard Weight in kg | Standard Volume in $m^3$ |
|---|---|---|---|---|
| **12.5 m** White colour | **67618** | 1 | - | - |
| **16.5 m** White colour | **67619** | 1 | - | - |
| **25 m** Orange - White | **67620** | 1 | - | - |
| **33 m** Orange - White | **67621** | 1 | - | - |
| **50 m** Orange - White | **67622** | 1 | - | - |

* Available in other colours (Blue, Green, Red)

**It is possible to supply any length, colour combination and rope.**

# LANE ROPES



## Moscow model

Supplied assembled with floats, 7 mm polyester rope (code 00210), tightener (00209) and hook (00207).

| | | Code | Standard Pack | Standard Weight in kg | Standard Volume in m³ |
|---|---|---|---|---|---|
| **12.5 m** | White colour | **67623** | 1 | - | - |
| **16.5 m** | White colour | **67624** | 1 | - | - |
| **25 m** | Orange - White | **67625** | 1 | - | - |
| **33 m** | Orange - White | **67626** | 1 | - | - |
| **50 m** | Orange - White | **67627** | 1 | - | - |

* Available in other colours (Blue, Green, Red)

# FLOATS



## BCN03 model

Supplied with inner turbine mechanism.

| | Code | Standard Pack | Standard Weight in kg | Standard Volume in m³ |
|---|---|---|---|---|
| Colour white | **28204** | - | - | - |
| green | **28425** | - | - | - |
| Blue | **28423** | - | - | - |
| red | **28424** | - | - | - |



## Sydney model

| | Code | Standard Pack | Standard Weight in kg | Standard Volume in m³ |
|---|---|---|---|---|
| Colour white | **54032** | - | - | - |
| yellow | **54031** | - | - | - |
| Blue | **54028** | - | - | - |
| red | **54029** | - | - | - |
| green | **54030** | - | - | - |

## Moscow model





| | Code | Standard Pack | Standard Weight in kg | Standard Volume in m³ |
|---|---|---|---|---|
| **Moscow propeller:** | | | | |
| Colour white | **00161** | 150 | 7.0 | 0.070 |
| orange | **00162** | 150 | 7.0 | 0.070 |
| Blue | **00163** | 150 | 7.0 | 0.070 |
| red | **00164** | 150 | 7.0 | 0.070 |
| **Rome floaters:** | | | | |
| Colour white | **00149** | 500 | 7.0 | 0.110 |
| orange | **00150** | 500 | 7.0 | 0.110 |
| Blue | **00151** | 500 | 7.0 | 0.110 |
| red | **00152** | 500 | 7.0 | 0.110 |

+ info PDB
Further information on **PRODUCTS**
www.astralpool.com

# LANE ROPE STORAGE EQUIPMENT



## BCN03 Lane rope storage basket

A new trolley designed to transport and store the BCN03 Lane ropes after use in the swimming pool. The BCN03 lane rope storage basket is manufactured of AISI-316 Stainless Steel and includes a PVC bag for collecting excess water from the float lines. Due to the bag's bottom outlets, it is emptied in a controlled manner with no water spillage. The trolley has four castor wheels for maximum mobility. Two of these fitted with brakes. It can store a lane rope up to 50 m long (or 2 of 25) and can be used for all lane rope models.

| Code | Standard Pack | Standard Weight in kg | Standard Volume in $m^3$ |
|---|---|---|---|
| **28623** | 1 | 55.0 | 0.389 |

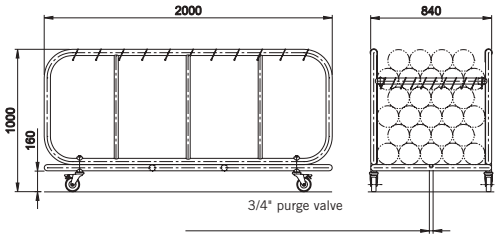




## Lane rope roller

Made in Stainless Steel AISI-304, fitted with a large wheel for operation. It is mounted on 4 castor wheels for easy handling. Two of these are fitted with brakes.

| | Code | Standard Pack | Standard Weight in kg | Standard Volume in $m^3$ |
|---|---|---|---|---|
| Width 1.2 m | **58860** | 1 | 27 | 0.31 |
| Width 1.8 m | **58859** | 1 | 32 | 0.45 |

**NUMBER OF LANE ROPES COLLECTED**

| Model | 1.2 m | | | 1.8 m | | |
|---|---|---|---|---|---|---|
| | 25 m | 33 m | 50 m | 25 m | 33 m | 50 m |
| **ROMA** | 8 | 6 | 4 | 12 | 9 | 6 |
| **SIDNEY** | 2 | 1 | 1 | 3 | 2 | 1 |
| **MOSCOW** | 4 | 2 | 2 | 6 | 3 | 3 |

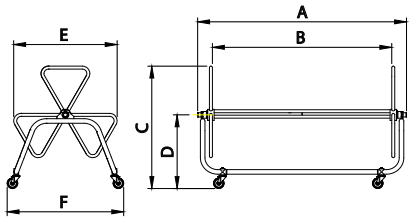


| Code | A | B | C | D | E | F |
|---|---|---|---|---|---|---|
| **58860** | 1415 | 1125 | 1165 | 690 | 970 | 1085 |
| **58859** | 2015 | 1725 | | | | |



## Under deck lane rope storage system

Made of AISI-316, allows the storage of the float lines beneath the deck. The float line box is embedded in the pool surround and holds the retractable reel over which the float line slides into the hole. This unit can be complemented with a lane rope collecting bag if required.

| Code | Standard Pack | Standard Weight in kg | Standard Volume in $m^3$ |
|---|---|---|---|
| **15842** | 1 | 12.8 | 0.08 |

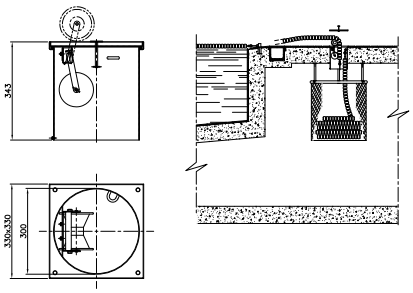

## LANE ROPE ACCESSORIES

**Zurich/Wiesbaden installation diagram Wiesbaden**

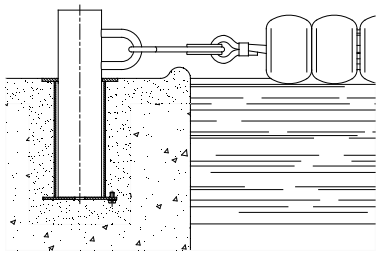

**Anchor** **code 00141**
**Lane rope support** **code 00140**

**Finnish type installation diagram**

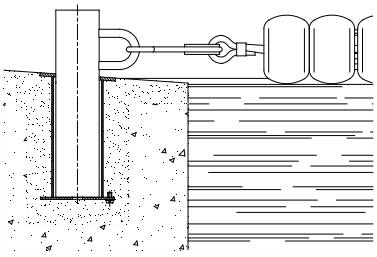

**Anchor** **code 00142**
**Lane rope support** **code 00140**

**Standard Installation diagram**

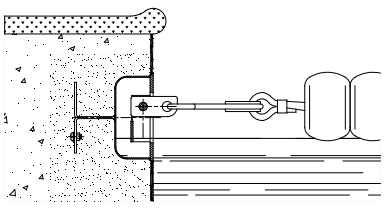

**Anchoring cup** **code 09206**
**code 09207**
**code 00205**
**code 00206**



### Lane rope anchor

Made in AISI-316 stainless steel. To use with anchoring fixture 00141 and 00142.

| Code | Standard Pack | Standard Weight in kg | Standard Volume in $m^3$ |
|---|---|---|---|
| **00140** | 2 | 0.63 | 0.003 |



### Concrete anchoring cup with central rod

Made in AISI-316 stainless steel.

For concrete pool

| Code | Standard Pack | Standard Weight in kg | Standard Volume in $m^3$ |
|---|---|---|---|
| **09206** | 1 | 0.4 | 0.001 |



### Concrete anchoring cup with central rod

Made in AISI-316 stainless steel.

For prefabricated pools
with flange, gasket and screws

| Code | Standard Pack | Standard Weight in kg | Standard Volume in $m^3$ |
|---|---|---|---|
| **09207** | 1 | 0.5 | 0.001 |



### Retractable anchoring cup

Made in AISI-316 stainless steel.

For concrete pool
with a retractable hook

| Code | Standard Pack | Standard Weight in kg | Standard Volume in $m^3$ |
|---|---|---|---|
| **00205** | 1 | 0.46 | 0.001 |

+ info
PDB
Further information on PRODUCTS
www.astralpool.com

# LANE ROPE ACCESSORIES



## Retractable anchoring cup

Made in AISI-316 stainless steel.

For prefabricated pools with retractable hook, flange, gaskets and screws

| Code | Standard Pack | Standard Weight in kg | Standard Volume in $m^3$ |
|---|---|---|---|
| **00206** | 1 | 0.6 | 0.001 |



## Lane rope ratchet

Chrome plated brass.

| Code | Standard Pack | Standard Weight in kg | Standard Volume in $m^3$ |
|---|---|---|---|
| **00208** | 1 | 0.97 | 0.002 |



## Lane rope ratchet

AISI-316 stainless steel.

| Code | Standard Pack | Standard Weight in kg | Standard Volume in $m^3$ |
|---|---|---|---|
| **00209** | 1 | 0.2 | 0.001 |



## Lane rope spring

AISI-204 stainless steel with cable fastener.

| Code | Standard Pack | Standard Weight in kg | Standard Volume in $m^3$ |
|---|---|---|---|
| **01468** | 1 | 0.62 | 0.002 |



## Lane rope hook

Stainless Steel AISI-304.

| Code | Standard Pack | Standard Weight in kg | Standard Volume in $m^3$ |
|---|---|---|---|
| **00207** | 100 | 5 | 0.01 |

# LANE ROPE ACCESSORIES



## Cords and cables

| | Code | Standard Pack | Standard Weight in kg | Standard Volume in m³ |
|---|---|---|---|---|
| Ø 7 mm polyester rope | **00210** | 110 m | 2.0 | 0.090 |
| AISI-316 stainless steel cable Ø 4 x 6 mm with plastic coating DIN 3055 | **00211** | - | 0.1 | 0.001 |
| BCN03 AISI-316 Stainless Steel cable Ø 6 mm without plastic coating | **28808** | - | - | - |

# SIGNAGE



## False start indicators

**Please indicate pool width when placing your order.**
Comprises 2 posts in AISI-316 S.S. (one with pully and quick release cord). Height 1.8 m. Anchoring socket not included.

| | Code | Standard Pack | Standard Weight in kg | Standard Volume in m³ |
|---|---|---|---|---|
| **False start posts:** | | | | |
| - Pool width up to 21 m Ø 43 mm pipe for use with anchoring sockets 00141 and 00142 | **19950** | 1 | 5.6 | 0.01 |
| - Pool width over 21 m Ø 48 mm pipe for use with anchoring sockets 19960 and 19961 | **19951** | 1 | 9.4 | 0.01 |
| **False start floats:** Polyester cord and floats | **19954** | 1 | - | - |

**NOTE:**
**You must state the pool dimensions on placing your order.**



## Backstroke turn indicators

**Please indicate pool width when placing your order.**
Comprises 4 posts in AISI-316 stainless steel. Height 1.8 m. Anchoring sockets not included.

| | Code | Standard Pack | Standard Weight in kg | Standard Volume in m³ |
|---|---|---|---|---|
| **Backstroke turn indicator posts** | | | | |
| - Pool width up to 21 m Ø 43 mm pipe for use with anchoring sockets 00141 and 00142 | **19952** | 1 | 11.2 | 0.03 |
| - Pool width over 21 m Ø 48 mm pipe for use with anchoring sockets 19960 and 19961 | **19953** | 1 | 20.0 | 0.03 |
| **Backstroke turn indicator bunting** 2 units | **19955** | 1 | - | - |

**NOTE:**
**You must state the pool dimensions on placing your order.**

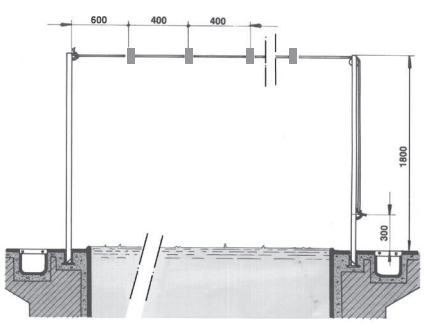


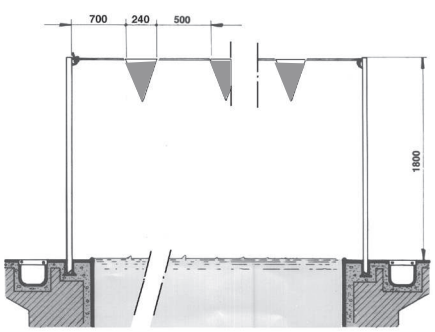

+ info
Further information on **PRODUCTS**
www.astralpool.com

# TURNING PANELS



**NOTE:**
**You must state the pool dimensions and depths on placing your order.**

## Turning panels

In AISI-316 stainless steel with plastic lattice screen. Height 300 mm. Fixing support (00139) is not included

| | Code | Standard Pack | Standard Weight in kg | Standard Volume in $m^3$ |
|---|---|---|---|---|
| Lane width 2 m | **00137** | 1 | 13.6 | 0.040 |
| Lane width 2.5 m | **00138** | 1 | 16.5 | 0.051 |

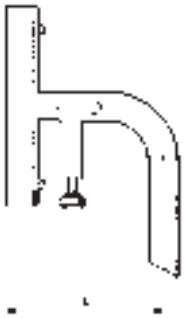

## Bracket

AISI-316 stainless steel (for coupling to 00141 and 00142 fasteners). State H and L dimensions and type of overflow channel when placing an order. A minimum of two units are required for each rotating panel.

| Code | Standard Pack | Standard Weight in kg | Standard Volume in $m^3$ |
|---|---|---|---|
| **00139** | 1 | 4.0 | 0.054 |

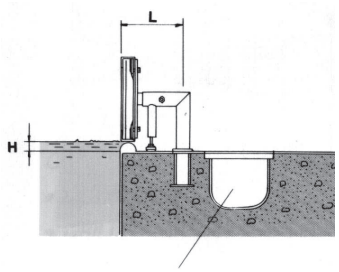


**ANCHORING DETAILS WHEN MEASUREMENT «L» IS LESS THAN 500 mm.**

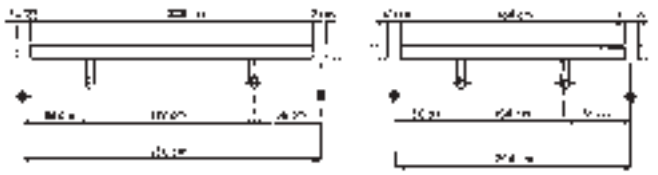

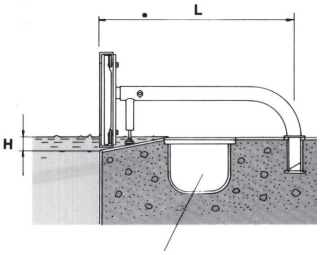


**ANCHORING DETAILS WHEN MEASUREMENT «L» IS OVER 500 mm.**

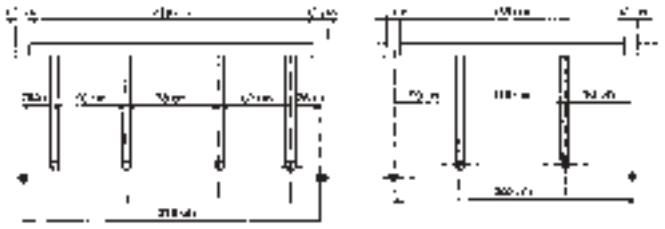

# ATTACHMENTS FOR COMPETITION EQUIPMENT



## Horizontal flange anchoring sockets

**Zurich-Wiesbaden.** In S.S. AISI-316.

| | Code | Standard Pack | Standard Weight in kg | Standard Volume in m³ |
|---|---|---|---|---|
| For Ø 43 mm pipe. | **00141** | 2 | 1.17 | 0.002 |
| For Ø 48 mm pipe. | **19960** | 2 | 1.3 | 0.002 |



## Angled flange anchoring socket

**Finnish.** In S.S. AISI-316.

| | Code | Standard Pack | Standard Weight in kg | Standard Volume in m³ |
|---|---|---|---|---|
| For Ø 43 mm pipe. | **00142** | 2 | 1.13 | 0.002 |
| For Ø 48 mm pipe. | **19961** | 2 | 1.26 | 0.002 |



## Anchoring socket with locking bolts

**With bolts.** In S.S. AISI-316.

| Code | Standard Pack | Standard Weight in kg | Standard Volume in m³ |
|---|---|---|---|
| **00143** | 2 | 1.47 | 0.003 |

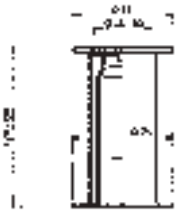

**Code 00141**
**Code 19960**

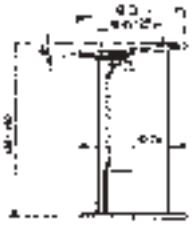

**Code 00142**
**Code 19961**

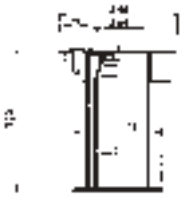

**Code 00143**

# WATER POLO GOAL



## Water polo goal

The water polo goal is lightweight, floating and very resistant. It is built entirely from aluminium and is oven-painted white.

Manufacturing and measurements in accordance with FINA international swimming federation standards.

- Floating: Polyurethane foam-filled aluminium floats.
- Goal frame: 80 x 50mm aluminium tube
- Net fastening: 6 mm stainless steel round rod.
- Net side pipe: 23 mm stainless steel round pipe with fastening in frame and float.
- Fastening for goal lines.
- Nets included.

| | Code | Standard Pack | Standard Weight in kg | Standard Volume in m³ |
|---|---|---|---|---|
| Official water polo goal kit | **69654** | 1 | - | - |



Inúu Wellness Centre (Andorra)
Architect: Jean-Michel Ruols

WELLNESS SOLUTIONS

FLUIDRA

ASTRALPOOL



Only Fluidra, with more than 40 years' experience and operations worldwide, could become the new leader in the manufacture of stainless steel swimming pools, with its brand INOX POOL.

Much more than swimming pools, their high quality and beauty will leave you with unforgettable memories. Turnkey solutions are available both for residential and public pools (hotels, sports clubs, spas...).

**Advantages of an INOX POOL:**

- **Durable.** They last a lifetime.
- **Watertight.** They never leak or lose water.
- **Adaptable.** We will design the pool of your dreams, whatever your specifications.
- **Clean.** Dirt does not stick to them.
- **Sustainable.** The stainless steel is fully recyclable.
- **Elegant.** They have unique finishes.

**Place your trust in INOX POOL. We will create the pool of your life built to last a lifetime. WARRANTY OF UP TO 20 YEARS.**

## Customized, integrated solutions adapted to your needs and to your imagination. Hypnotic pools.

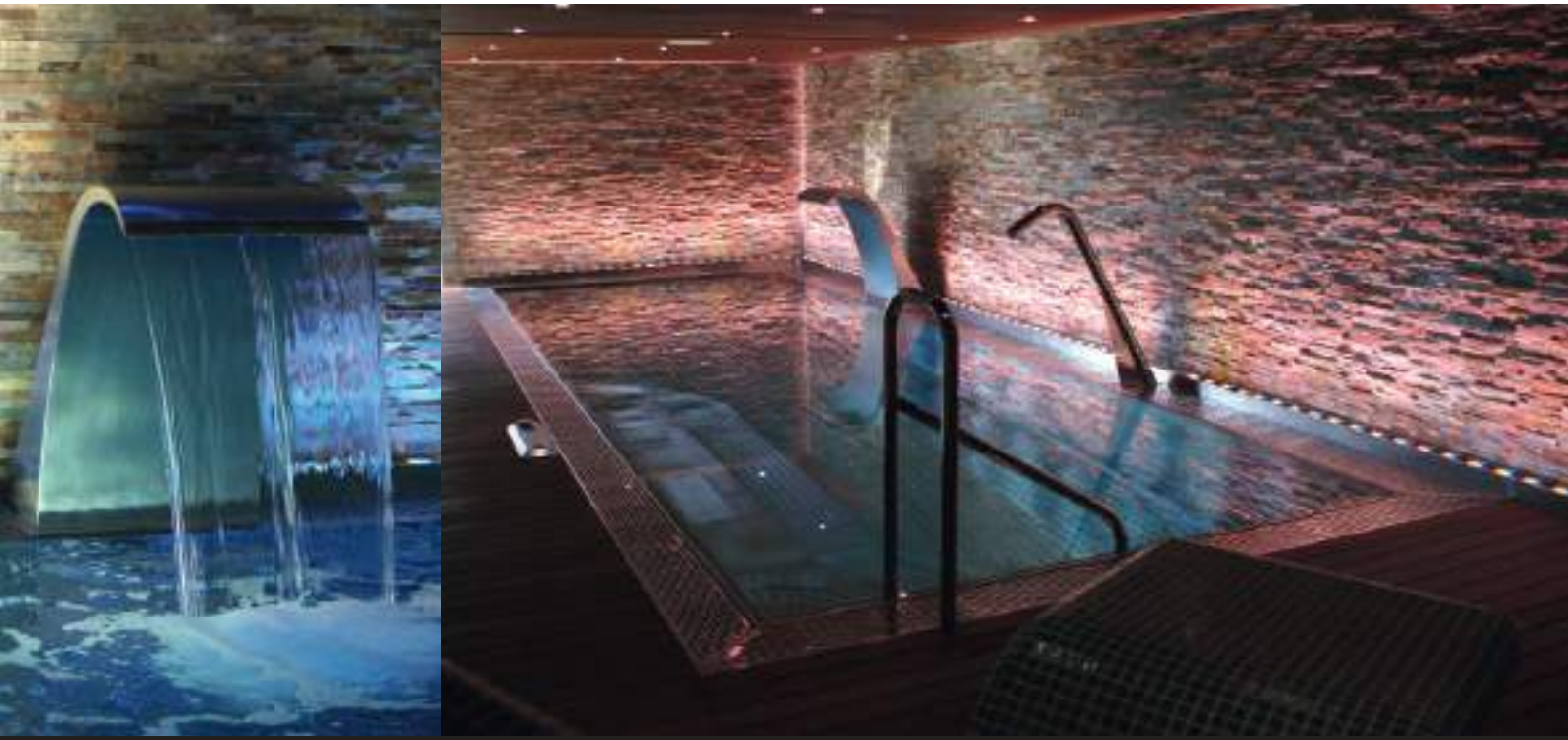

Ask for your new **Wellness** catalogue by AstralPool

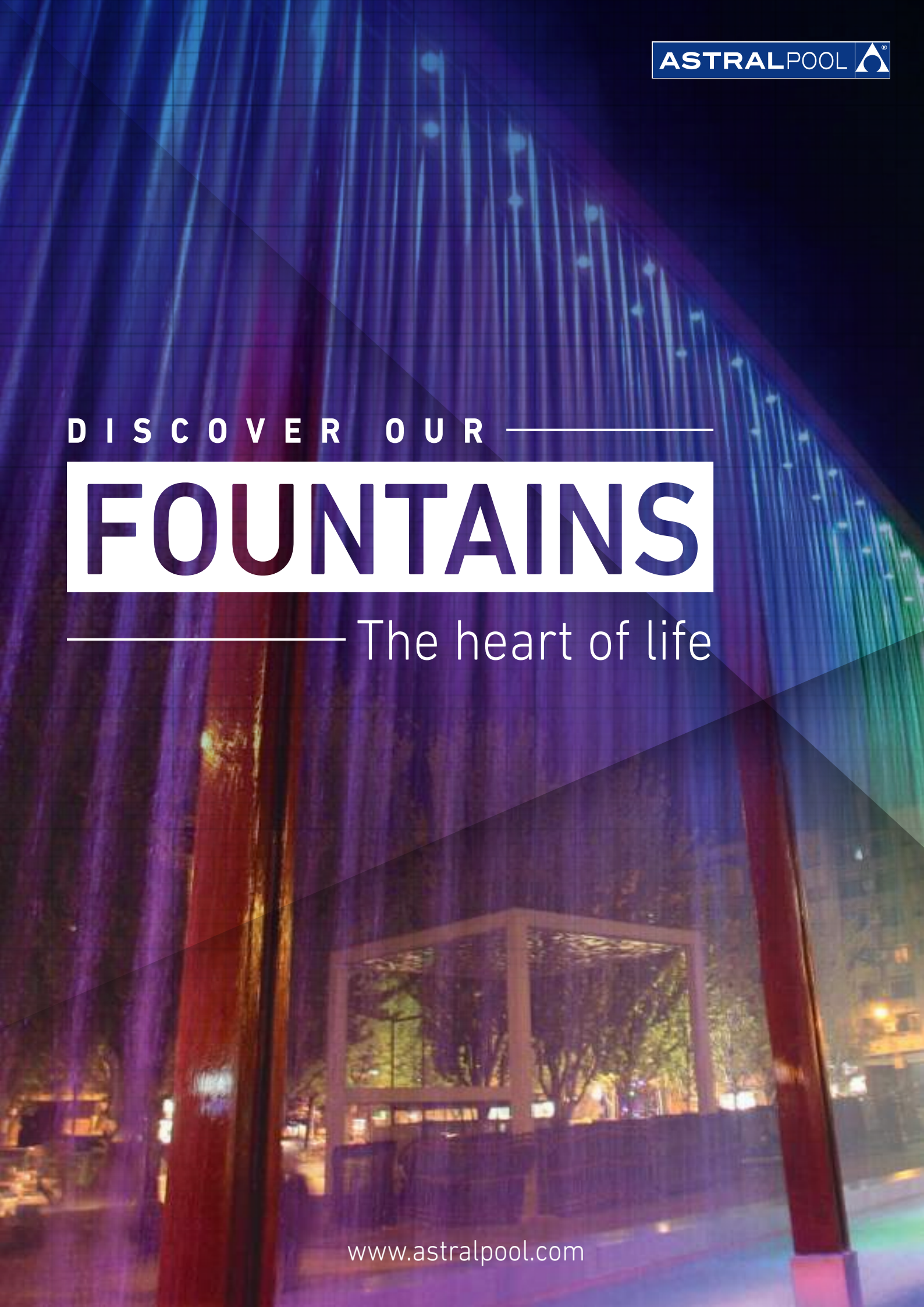

ASTRALPOOL

DISCOVER OUR

# FOUNTAINS

The heart of life

www.astralpool.com

# SPA & POOL **INOX SOLUTION**

E X C L U S I V I T Y

## INTEGRAL SOLUTIONS, UNIQUE DESIGNS AND CUSTOM SOLUTIONS DEVELOPED CREATE EXCLUSIVE SPACES IN A WELLNESS ENVIRONMENT.

We put at your disposal all the tools and our broad experience to turn your project into reality, adapting our designs to the client's needs. Personalised projects.

Our flexibility and dynamism, as well as our adaptation to the needs and regulations of each market, have led us to build steel solutions in more than 60 countries, making us one of the companies with the greatest international outreach in the sector.

STAINLESS STEEL **CRAFTSMEN**



ASTRALPOOL

Av. Francesc Macià, 60, Planta 17 | 08208 Sabadell (Barcelona) Spain | Tel.: +34 93 724 39 00
www.astralpool.com | www.fluidra.com

FLUIDRA



**FLUIDRA**
Avda. Francesc Macià, 60 - Planta 20
08208 Sabadell (Barcelona) - Spain
Tel.: +34 93 724 39 00
**www.astralpool.com**